DIST	COUNTY	ROUTE	KILOMETER POST TOTAL PROJECT	SHEET No	TOTAL SHEETS
04	SF	80	13.2/13.9	870R1	1204

REGISTERED CIVIL ENGINEER DATE

09/15/2006
PLANS APPROVAL DATE

REGISTERED PROFESSIONAL ENGINEER
EFTHYMIOS DELIS
No. 51434
Exp. 6-30-08
CIVIL
STATE OF CALIFORNIA

The State of California or its officers or agents shall not be responsible for the accuracy or completeness of electronic copies of this plan sheet.

Caltrans now has a web site! To get to the web site, go to: http://www.dot.ca.gov

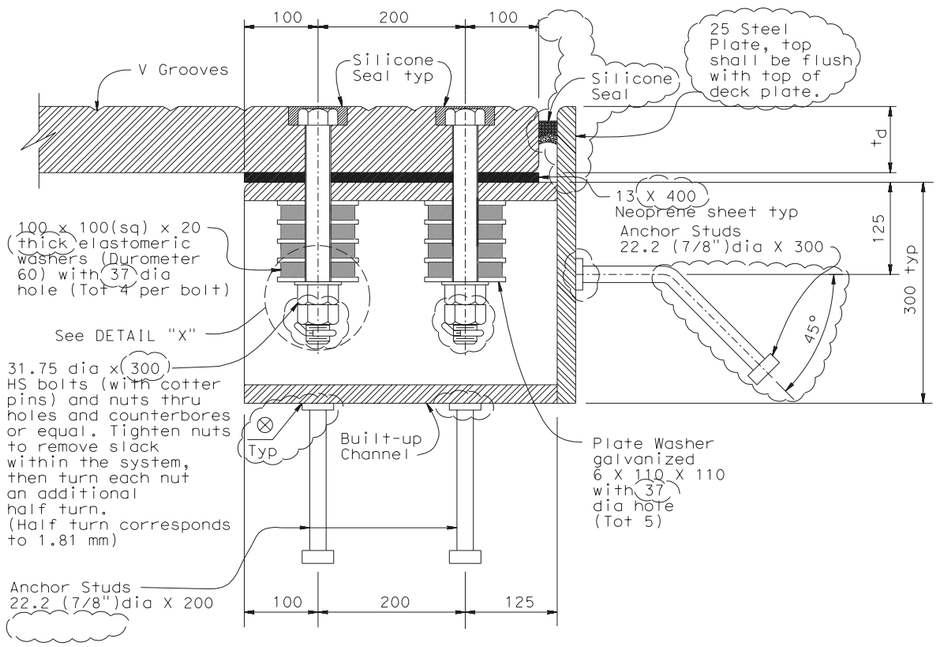

SECTION F-F 1
NO SCALE

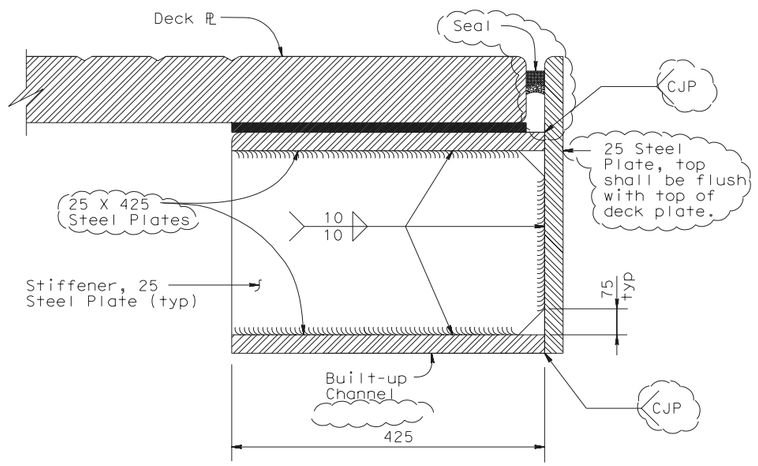

SECTION G-G 1
NO SCALE

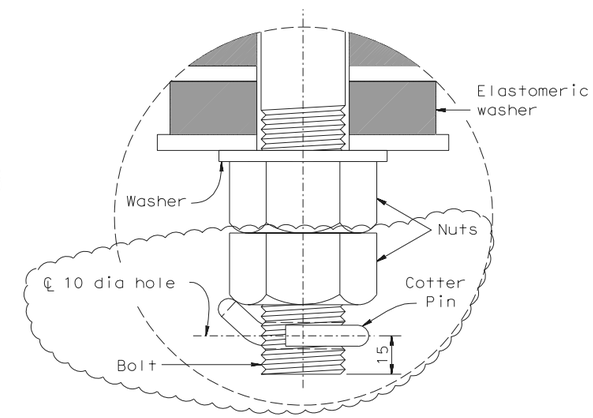

DETAIL X 1
NO SCALE

NOTE:

1. For td value see "CROSS SECTION" sheet.

MARK	DATE	DESCRIPTIONS	BY	CH'D
1	9/15/06	Channel improvements	TD	AK

REVISIONS

CONTRACT CHANGE ORDER NO. 25
SHEET ___ OF ___

THE CONTRACTOR SHALL VERIFY ALL CONTROLLING FIELD DIMENSIONS BEFORE ORDERING OR FABRICATING ANY MATERIAL.

SAN FRANCISCO OAKLAND BAY BRIDGE
EAST SPAN SEISMIC SAFETY PROJECT

SELF-ANCHORED SUSPENSION BRIDGE
(SUPERSTRUCTURE & TOWER)

SEISMIC JOINT (HINGE A)

CHANNEL ASSEMBLY DETAILS NO 2

Caltrans Metric

	BY	CHECKED
DESIGN	E DELIS	A KARTOUM
DETAILS	A R DUDSAK	A KARTOUM
QUANTITIES	E DELIS	A KARTOUM

STATE OF CALIFORNIA
DEPARTMENT OF TRANSPORTATION

DIVISION OF ENGINEERING SERVICES
STRUCTURE DESIGN
SPECIAL DESIGNS BRANCH

BRIDGE NO. 34-0006 L/R
KILOMETER POST 13.2/13.9

ALL DIMENSIONS ARE IN MILLIMETERS UNLESS OTHERWISE SHOWN

ORIGINAL SCALE IN MILLIMETERS FOR REDUCED PLANS 0 10 20 30 40 50 60 70 80 90 100

CU 04
EA 0120F1

DISREGARD PRINTS BEARING EARLIER REVISION DATES 1/24/06 8/18/06 10/30/06

SHEET 453R1 OF

FILE => spec_des_br_proj/04-0120F1/$REQUEST

STRUCTURES DESIGN DETAIL SHEET (METRIC) (REV.03-17-04)

USERNAME => $USER DATE PLOTTED => $DATE TIME PLOTTED => $TIME

C:\TEMP SAS\zakjsb06.dgn 3/30/2007 10:22:01 AM