DIST	COUNTY	ROUTE	KILOMETER POST TOTAL PROJECT	SHEET No	TOTAL SHEETS
04	SF	80	13.2/13.9	872S1	1204

REGISTERED CIVIL ENGINEER DATE

09/15/2006
PLANS APPROVAL DATE

REGISTERED PROFESSIONAL ENGINEER
ANTHYMIOS DELIS
No. 51434
Exp. 6-30-08
CIVIL
STATE OF CALIFORNIA

The State of California or its officers or agents shall not be responsible for the correctness or completeness of electronic copies of this plan sheet.

Caltrans now has a web site! To get to the web site, go to: http://www.dot.ca.gov

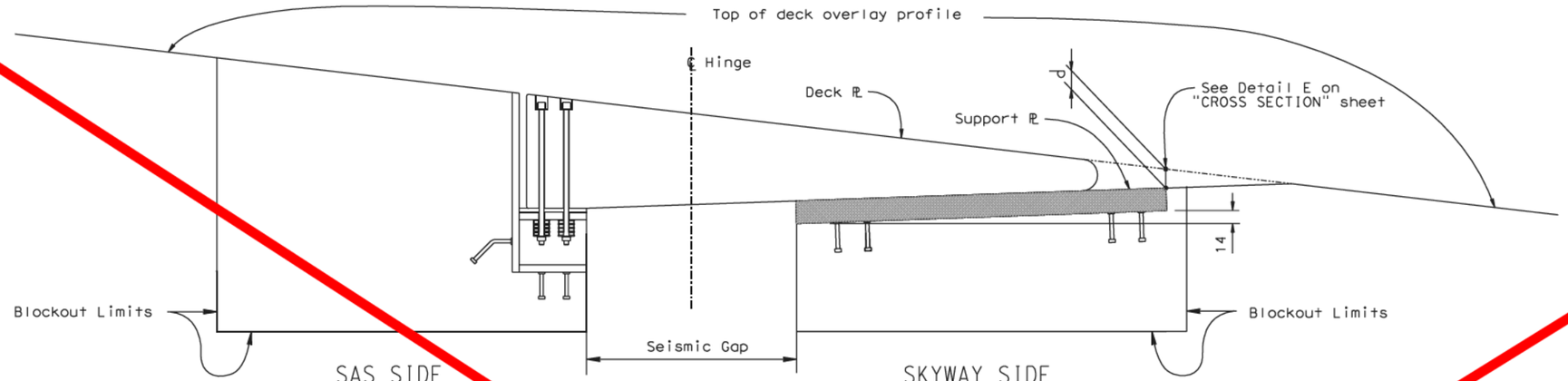

INSTALLATION DETAIL
NO SCALE

CONTRACT CHANGE ORDER NO. 25
SHEET ___ OF ___

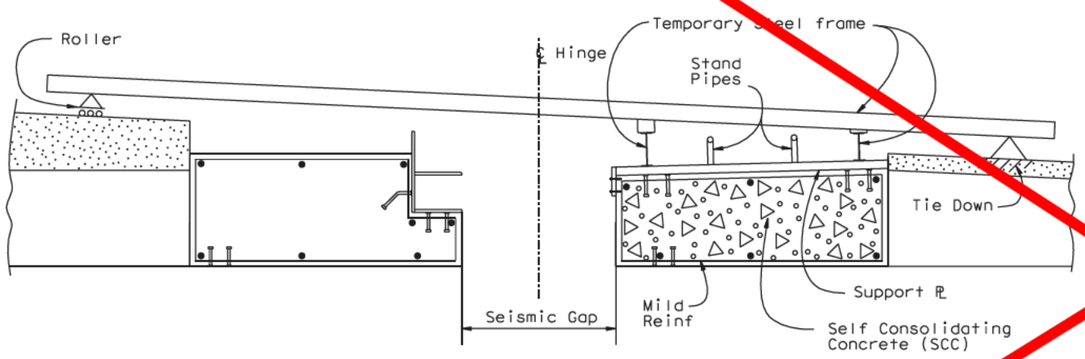

STEP 1
NO SCALE

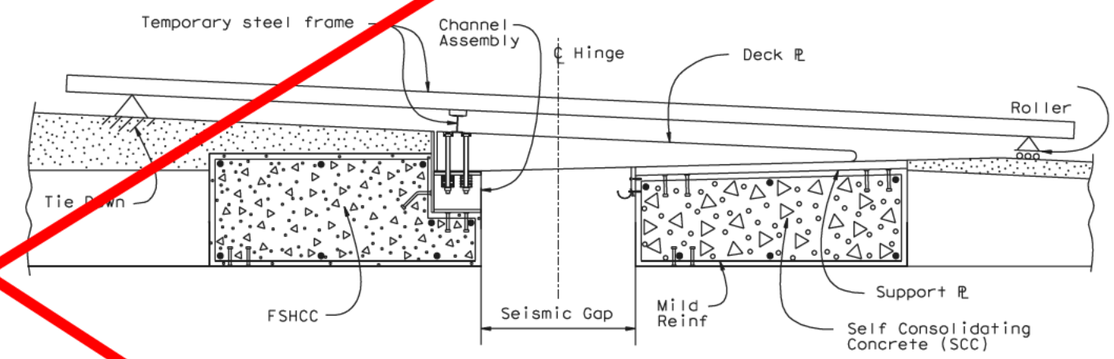

STEP 2
NO SCALE

SCHEMATIC CONSTRUCTION SEQUENCE
NO SCALE

- Place anchor studs and mild reinforcement in blockout areas.
- Install temporary steel frame.
- For each joint module, place support plate at elevations and locations shown on plans.
- Align all joint modules together and secure them.
- Pour self consolidating concrete (SCC) below support plate.
- Let SCC set and reach 14 MPa strength min.
- Remove stand pipes and clean top surface of support plates.

- Steel frame supports are changed so frame is tied down on channel assembly side and is free to move on support plate side.
- For each joint module, place channel assembly and deck plate at elevations and locations shown on plans. Channel assembly sits suspended from steel frame. Deck plate sits on support plate and channel assembly. Make adjustments so full bearing between deck and support plates is achieved.
- Align all joint modules together and secure them.
- Pour Fast Setting Hydraulic Cement Concrete (FSHCC) in the channel assembly blockout area.
- Let FSHCC set for at least 3 hours minimum.
- Tighten bolts and place cotter pins.
- Install gutter.
- Place deck overlay.
- Seal joint with silicone seal.

Void
Plan Sheet

NOTES:

1. Not all reinforcement and joint details are shown for clarity.

THE CONTRACTOR SHALL VERIFY ALL CONTROLLING FIELD DIMENSIONS BEFORE ORDERING OR FABRICATING ANY MATERIAL.

	BY	CHECKED
DESIGN	E DELIS	A KARTOUM
DETAILS	A R DUDSAK	A KARTOUM
QUANTITIES	E DELIS	A KARTOUM

STATE OF CALIFORNIA
DEPARTMENT OF TRANSPORTATION

DIVISION OF ENGINEERING SERVICES
STRUCTURE DESIGN
SPECIAL DESIGNS BRANCH

BRIDGE NO. 34-0006 L/R
KILOMETER POST 13.2/13.9

SAN FRANCISCO-OAKLAND BAY BRIDGE
EAST SPAN SEISMIC SAFETY PROJECT
SELF-ANCHORED SUSPENSION BRIDGE
(SUPERSTRUCTURE & TOWER)
SEISMIC JOINT (HINGE A)
CONSTRUCTION SEQUENCE

ALL DIMENSIONS ARE IN MILLIMETERS UNLESS OTHERWISE SHOWN

ORIGINAL SCALE IN MILLIMETERS FOR REDUCED PLANS 0 10 20 30 40 50 60 70 80 90 100

CU 04
EA 0120F1

DISREGARD PRINTS BEARING EARLIER REVISION DATES 1/24/06 8/18/06 10/30/06

SHEET 455S1 OF

FILE => spec_des_br_proj/04-0120F1/$REQUEST

STRUCTURES DESIGN DETAIL SHEET (METRIC) (REV.03-17-04)

USERNAME => $USER DATE PLOTTED => $DATE TIME PLOTTED => $TIME

C:\TEMP SAS\tzakjsb09.dgn 3/30/2007 10:24:42 AM