DIST	COUNTY	ROUTE	TOTAL PROJECT	F NO	SHEET NO.
04	SF	80	13.2/13.9	865R1	1204

REGISTERED CIVIL ENGINEER DATE

09/15/2006
PLANS APPROVAL DATE

REGISTERED PROFESSIONAL ENGINEER EFTHYMIOS DELIS No. 51434 Exp. 6-30-08 CIVIL STATE OF CALIFORNIA

The State of California or its officers or agents shall not be responsible for the accuracy or completeness of electronic copies of this plan sheet.

Caltrans now has a web site! To get to the web site, go to: http://www.dot.ca.gov

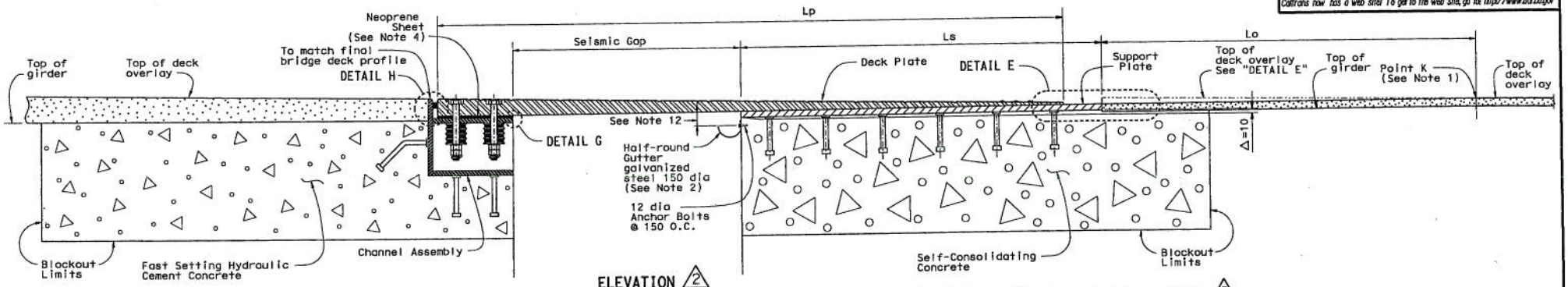

ELEVATION 2
SCALE = 1:10

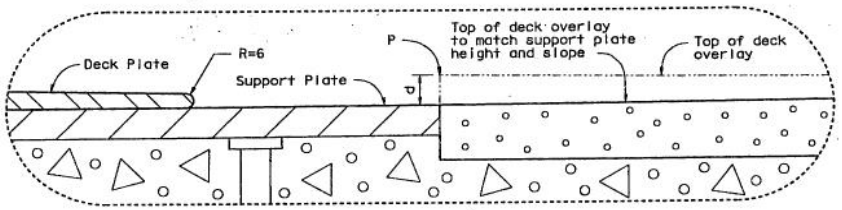

DETAIL E 2
SCALE = 1:2

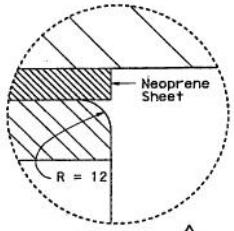

DETAIL G 1
SCALE = 1:1

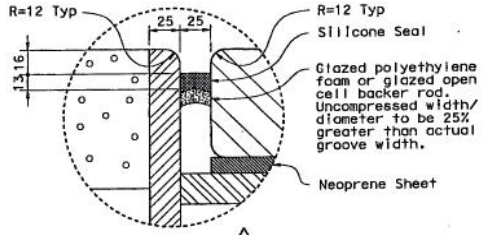

DETAIL H 1
SCALE = 1:2

THE CONTRACTOR SHALL VERIFY ALL CONTROLLING FIELD DIMENSIONS BEFORE ORDERING OR FABRICATING ANY MATERIAL.

JOINT INFORMATION 2

LOCATION		HINGE AE	HINGE AW
SKEW (°)		0	0
DECK PLATE	Thickness td (mm)	90	90
	Length Lp (mm)	3300	3300
SUPPORT PLATE	Thickness ts (mm)	32	32
	Length Ls (mm)	1900	1900
SEISMIC GAP @ 20°	(mm)	1200	1200
MAXIMUM DECK GRIND	d (mm)	25	25
P (See DETAIL E)	STA	62+04.188	62+14.885
	ELEV	48.635	49.444
	Lo (mm)	±1300	±1300

MARK	DATE	DESCRIPTIONS	BY	CH'D
2	12/18/07	Joint improvements	TD	AK
1	9/15/06	Joint improvements	TD	AK

REVISIONS

CONTRACT CHANGE ORDER NO. 25
SHEET ___ OF ___

NOTES: 2

1. K is defined as the intersection point between the top of deck slope and the top of the support plate slope.
2. Use caulking or sealant between gutter and concrete.
3. Seismic joint to be used in conjunction with closure pour. Closure pour shall not be placed until final deck surface is within the tolerance specified.
4. Thirty-Seven mm holes in neoprene sheets shall be drilled or punched so that the neoprene is not distorted at the time of installation. See "CHANNEL ASSEMBLY DETAILS NO. 2" sheet.
5. For deck plate details see " DECK PLATE DETAILS NO. 1" and " DECK PLATE DETAILS NO. 2" sheets.
6. For mild reinforcement in blockout areas, see "REINFORCMENT DETAILS" sheet. Not all mild reinforcement is shown for clarity.
7. For channel assembly details, see "CHANNEL ASSEMBLY DETAILS NO 1" and "CHANNEL ASSEMBLY DETAILS NO 2".
8. Place deck plate, support plate and channel assembly so that full bearing is achieved between i) deck and support plates and ii)deck plate and channel assembly.
9. Self-consolidating concrete shall be used in support plate blockout.
10. Fast setting hydraulic cement concrete shall be used in channel assembly blockout.
11. Catwalk for maintenance crew within seismic gap not shown.
12. Gutter shall be placed on the same side as the support plate, 75 mm minimum from the deck plate, at a 2% slope.
13. For support plate details see "SUPPORT PLATE DETAILS" sheet.

SAN FRANCISCO OAKLAND BAY BRIDGE
EAST SPAN SEISMIC SAFETY PROJECT
SELF-ANCHORED SUSPENSION BRIDGE
(SUPERSTRUCTURE & TOWER)

SEISMIC JOINT (HINGE A)
CROSS SECTION

Caltrans Metric

	BY	CHECKED
DESIGN	E DELIS	A KARTOUM
DETAILS	A R DUDSAK	A KARTOUM
QUANTITIES	E DELIS	A KARTOUM

ALL DIMENSIONS ARE IN MILLIMETERS UNLESS OTHERWISE SHOWN

ORIGINAL SCALE IN MILLIMETERS FOR REDUCED PLANS 0 10 20 30 40 50 60 70 80 90 100

STATE OF CALIFORNIA
DEPARTMENT OF TRANSPORTATION

DIVISION OF ENGINEERING SERVICES
STRUCTURE DESIGN
SPECIAL DESIGNS BRANCH

CU 04
EA 0120F1

BRIDGE NO. 34-0006 L/R
KILOMETER POST 13.2/13.9

DISREGARD PRINTS BEARING EARLIER REVISION DATES 1/24/06 1/24/06 10/30/06

REVISION DATES

SHEET 448R1 OF

FILE => spec_des_br_proj/04-0120F1/zbcap01.dgn

STRUCTURES DESIGN DETAIL SHEET (METRIC) (REV.03-17-04)

DIST	COUNTY	ROUTE	KILOMETER POST TOTAL PROJECT	SHEET No	TOTAL SHEETS
04	SF	80	13.2/13.9	866R1	1204

REGISTERED CIVIL ENGINEER DATE

09-15-2006

PLANS APPROVAL DATE

REGISTERED PROFESSIONAL ENGINEER EFTYMIOS DELIS No. 51434 Exp. 6-30-08 CIVIL STATE OF CALIFORNIA

The State of California or its officers or agents shall not be responsible for the accuracy or completeness of electronic copies of this plan sheet.

Caltrans now has a web site! To get to the web site, go to: http://www.dot.ca.gov

INDEX TO PLANS 1

SHEET NO.	TITLE
865R1	CROSS SECTION
866R1	INDEX TO PLANS
867R1	DECK PLATE DETAILS NO. 1
868R1	DECK PLATE DETAILS NO. 2
869R1	CHANNEL ASSEMBLY DETAILS NO. 1
870R1	CHANNEL ASSEMBLY DETAILS NO. 2
871R1	SUPPORT PLATE DETAILS
872R1	REINFORCEMENT DETAILS
872S1	CONSTRUCTION SEQUENCE

GENERAL NOTES LOAD FACTOR DESIGN 1

DESIGN:

Bridge Design Specifications (2000 LFD, AASHTO with Interims and revisions by Caltrans)

LIVE LOADING:

HS20-44, Alternative Military and Permit Design loads
Impact: 75%

STRUCTURAL STEEL:

ASTM A709/A709M Grade 50 [345] unless noted otherwise.

BOLTS:

ASTM A449 galvanized unless noted otherwise.

WELDING:

All structural steel plate interface connections shall be made with continuous complete joint penetration (CJP) welds unless noted otherwise.

SEISMIC LOADING:

STRUCTURAL CONCRETE:

Mild Steel Reinforcement (ASTM A706) f_y =415 MPa, f_u =738 MPa

MARK	DATE	DESCRIPTIONS	BY	CH'D
1	3/15/06	Sheet numbering/Legend	TD	AK

REVISIONS

CONTRACT CHANGE ORDER NO. 25
SHEET ___ OF ___

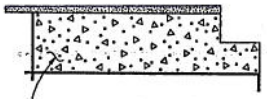

Fast Setting Hydraulic Cement Concrete

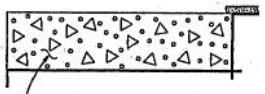

Self-Consolidating Concrete

LEGEND 1

Epoxy AC Overlay

Fast Setting Hydraulic Cement Concrete (FSHCC)
(f_{ci}= 14 MPa @ 3 hours
f_c' = 35 MPa @ 56 days)

Self-Consolidating Concrete (SCC) Bridge
(f_c'= 35 MPa @ 56 days)

THE CONTRACTOR SHALL VERIFY ALL CONTROLLING FIELD DIMENSIONS BEFORE ORDERING OR FABRICATING ANY MATERIAL.

Caltrans Metric

ALL DIMENSIONS ARE IN MILLIMETERS UNLESS OTHERWISE SHOWN

ORIGINAL SCALE IN MILLIMETERS FOR REDUCED PLANS 0 10 20 30 40 50 60 70 80 90 100

	BY	CHECKED
DESIGN	E DELIS	A KARTOUM
DETAILS	A R DUDSAK	A KARTOUM
QUANTITIES	E DELIS	A KARTOUM

STATE OF CALIFORNIA
DEPARTMENT OF TRANSPORTATION

DIVISION OF ENGINEERING SERVICES
STRUCTURE DESIGN
SPECIAL DESIGNS BRANCH

CU 04
EA 0120F1

BRIDGE NO. 34-0006 L/R
KILOMETER POST 13.2/13.9

SAN FRANCISCO OAKLAND BAY BRIDGE
EAST SPAN SEISMIC SAFETY PROJECT
SELF-ANCHORED SUSPENSION BRIDGE
(SUPERSTRUCTURE & TOWER)

SEISMIC JOINT (HINGE A)

INDEX TO PLANS

DISREGARD PRINTS BEARING EARLIER REVISION DATES

REVISION DATES

SHEET 866R1 OF

STRUCTURES DETAIL SHEET (SPECIAL) (REV 05-17-04)

IFILE => apec dea hr pcol/04-0120F1/zpltp02.dgn

U:FRAME => TOUSSOK DATE PLOTTED => 31-OCT-2006 TIME PLOTTED => 08:07

DIST	COUNTY	ROUTE	KILOMETER POST TOTAL PROJECT	SHEET No.	TOTAL SHEETS
04	SF	80	13.2/13.9	867R1	1204

REGISTERED CIVIL ENGINEER DATE

09/15/2006
PLANS APPROVAL DATE

REGISTERED PROFESSIONAL ENGINEER EFTHIMIOS DELIS No. 51434 Exp. 6-30-08 CIVIL STATE OF CALIFORNIA

The State of California or its officers or agents shall not be responsible for the accuracy or completeness of electronic copies of this plan sheet.

Caltrans now has a web site! To get to the web site, go to: http://www.dot.ca.gov

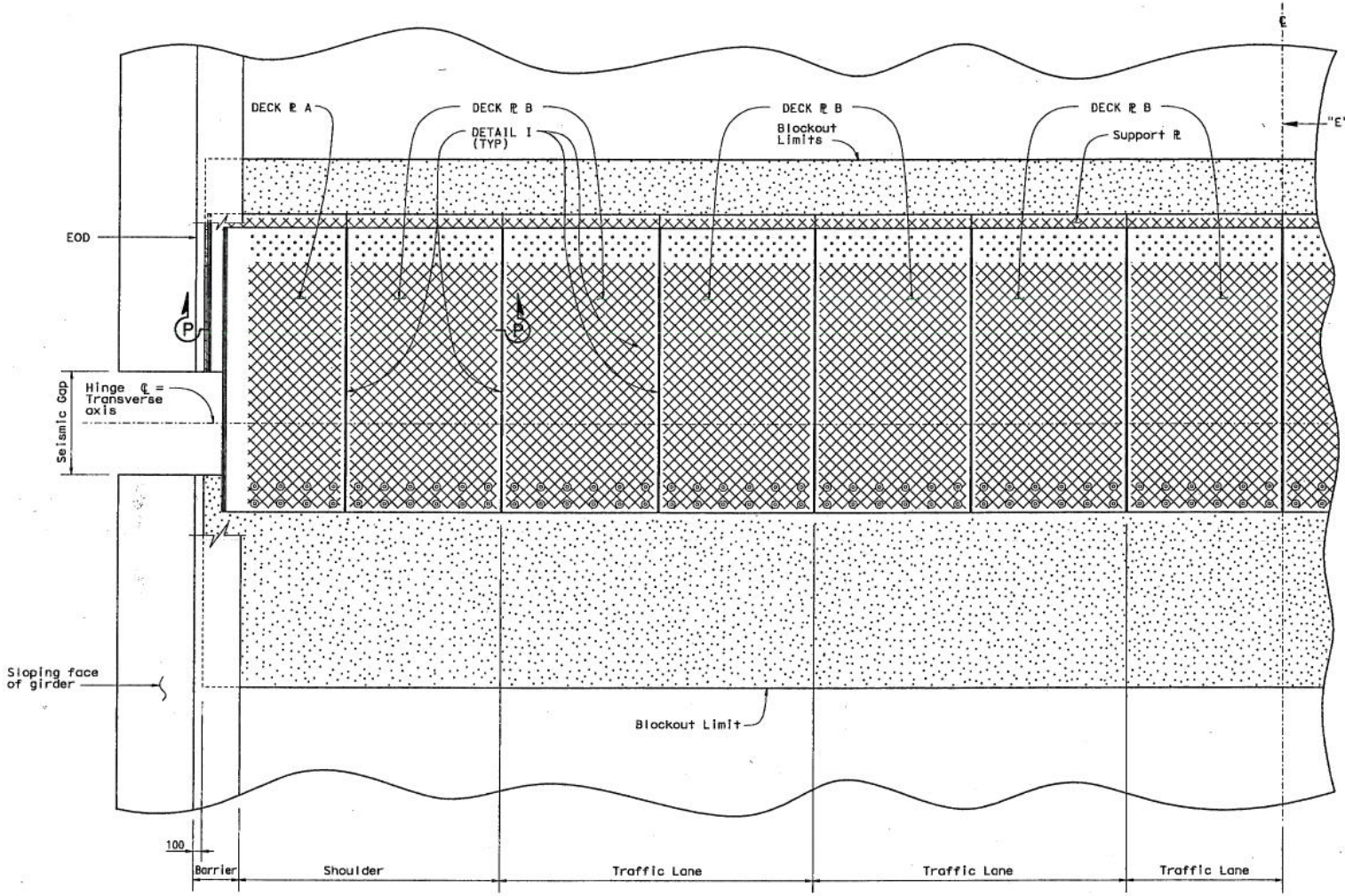

EXPANSION JOINT (HALF) PLAN 2

SCALE 1:25

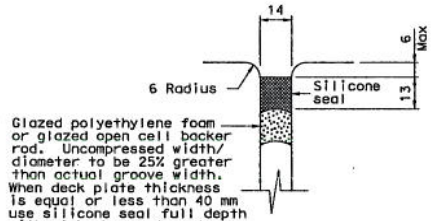

DETAIL I 1

SCALE = 1:1

NOTES: 2

1. For Plates A and B see "DECK PLATE DETAILS NO 2" sheet.
2. Denotes deck Steel Plate with V-grooves at ± 45°.
3. Deck Plate A matches with Support Plate A and the Channel Assembly A (Module A) Likewise for Module B. Channel assemblies are 14 wider than their corresponding deck plates.
4. One module "B" is placed per half traffic lane.
5. Portions of barriers are not shown for clarity.
6. For SECTION P-P see "DECK PLATE DETAILS NO 2" sheet.

MARK	DATE	DESCRIPTIONS	BY	CH'D
2	12/18/07	Steel PLs changes	TD	AK
1	9/15/06	Steel PLs & Seal changes	TD	AK

REVISIONS

CONTRACT CHANGE ORDER NO. 25
SHEET ___ OF ___

THE CONTRACTOR SHALL VERIFY ALL CONTROLLING FIELD DIMENSIONS BEFORE ORDERING OR FABRICATING ANY MATERIAL.

SAN FRANCISCO OAKLAND BAY BRIDGE
EAST SPAN SEISMIC SAFETY PROJECT

SELF-ANCHORED SUSPENSION BRIDGE
(SUPERSTRUCTURE & TOWER)

SEISMIC JOINT (HINGE A)

DECK PLATE DETAILS NO 1

Caltrans Metric

	BY	CHECKED
DESIGN	E DELIS	A KARTOUM
DETAILS	A R DUDSAK	A KARTOUM
QUANTITIES	E DELIS	A KARTOUM

STATE OF CALIFORNIA
DEPARTMENT OF TRANSPORTATION

DIVISION OF ENGINEERING SERVICES
STRUCTURE DESIGN
SPECIAL DESIGNS BRANCH

BRIDGE NO. 34-0006 L/R
KILOMETER POST 13.2/13.9

ALL DIMENSIONS ARE IN MILLIMETERS UNLESS OTHERWISE SHOWN

ORIGINAL SCALE IN MILLIMETERS FOR REDUCED PLANS 0 10 20 30 40 50 60 70 80 90 100

CU 04
EA 0120F1

DISREGARD PRINTS BEARING EARLIER REVISION DATES 1/24/06 8/24/06 10/30/06

REVISION DATES

SHEET 450R1 OF

FILE => spec_dgs_br_pro|/04-0120F1/zbk|sbD3.dgn

STRUCTURES DESIGN DETAIL SHEET (METRIC) (REV.03-17-04)

USERNAME => TDUDSAK DATE PLOTTED => 19-DEC-2007 TIME PLOTTED => 10:10

DIST	COUNTY	ROUTE	KILOMETER POST TOTAL PROJECT	SHEET No	TOTAL SHEETS
04	SF	80	13.2/13.9	868R1	1204

REGISTERED CIVIL ENGINEER DATE

09/15/2006

PLANS APPROVAL DATE

The State of California or its officers or agents shall not be responsible for the accuracy or completeness of electronic copies of this plan sheet.

REGISTERED PROFESSIONAL ENGINEER — EFTHYMIOS DELIS — No. 51434 — Exp. 6-30-08 — CIVIL — STATE OF CALIFORNIA

Caltrans now has a web site! To get to the web site, go to: http://www.dot.ca.gov

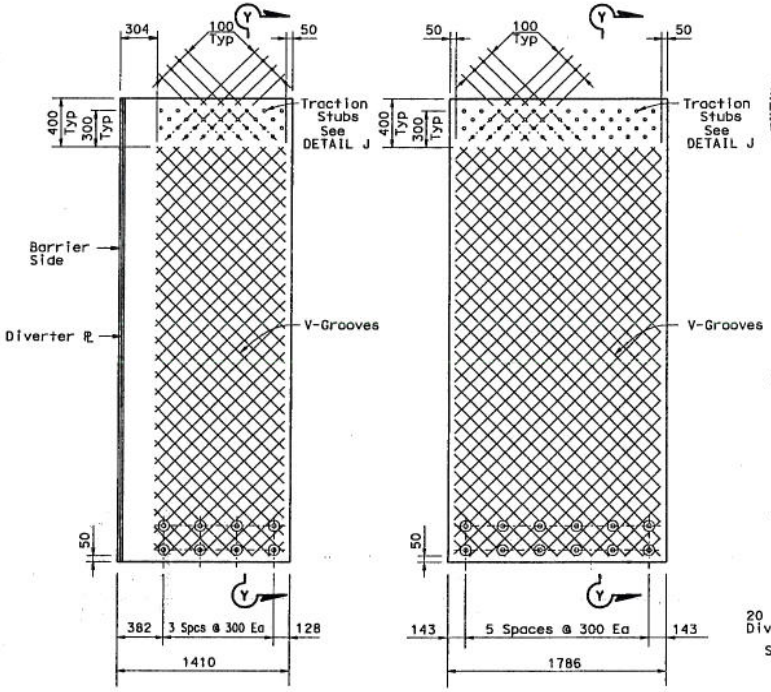

DECK PLATE A 2
SCALE = 1:20

DECK PLATE B 1
SCALE = 1:20

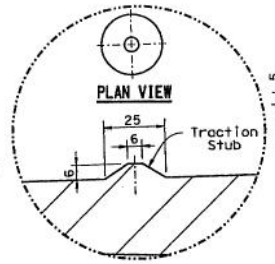

DETAIL J 2

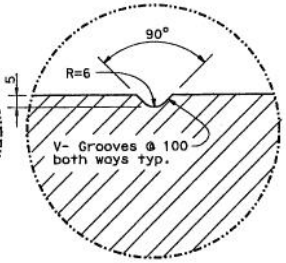

DETAIL K 2

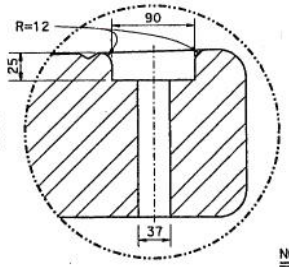

DETAIL L 2

MARK	DATE	DESCRIPTIONS	BY	CH'D
2	12/18/07	Steel ℄s changes	TD	AK
1	9/15/06	Deck ℄ changes	TD	AK

REVISIONS

CONTRACT CHANGE ORDER NO. 25
SHEET ___ OF ___

NOTES: 2

1. V-Groove pattern is similar for all Plates
2. For deck plate plan see "DECK PLATE DETAILS NO 1" sheet.
3. In Section P-P, Y may vary from 10 mm (min) to 20 mm (max).
4. Traction stubs to be machined.
5. For td, Lp and Ls values see "CROSS SECTION" sheet.
6. For SECTION P-P see "DECK PLATE DETAILS NO 1" sheet

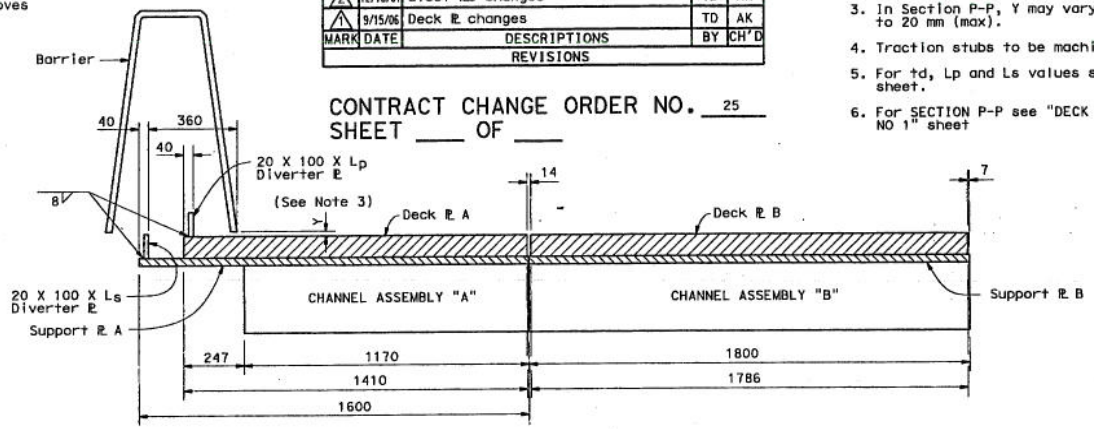

SECTION P-P 2
SCALE = 1:10

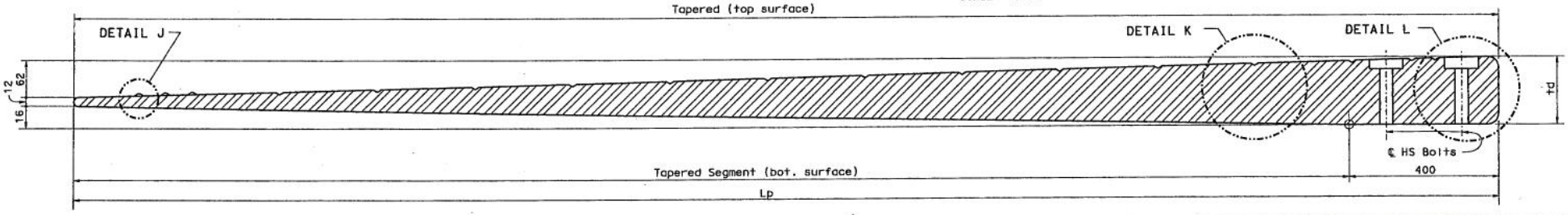

SECTION Y-Y 2
NO SCALE

THE CONTRACTOR SHALL VERIFY ALL CONTROLLING FIELD DIMENSIONS BEFORE ORDERING OR FABRICATING ANY MATERIAL.

SAN FRANCISCO OAKLAND BAY BRIDGE
EAST SPAN SEISMIC SAFETY PROJECT

SELF-ANCHORED SUSPENSION BRIDGE
(SUPERSTRUCTURE & TOWER)

SEISMIC JOINT (HINGE A)

DECK PLATE DETAILS NO 2

	BY	CHECKED
DESIGN	E DELIS	A KARTOUM
DETAILS	A R DUDSAK	A KARTOUM
QUANTITIES	E DELIS	A KARTOUM

STATE OF CALIFORNIA
DEPARTMENT OF TRANSPORTATION

DIVISION OF ENGINEERING SERVICES
STRUCTURE DESIGN
SPECIAL DESIGNS BRANCH

BRIDGE NO. 34-0006 L/R
KILOMETER POST 13.2/13.9

CU 04
EA 0120F1

ALL DIMENSIONS ARE IN MILLIMETERS UNLESS OTHERWISE SHOWN

ORIGINAL SCALE IN MILLIMETERS FOR REDUCED PLANS 0 10 20 30 40 50 60 70 80 90 100

DISREGARD PRINTS BEARING EARLIER REVISION DATES 12/18/06 8/28/06 03/30/06

REVISION DATES

SHEET 451R1 OF

FILE => spec_des_br_proj/04-0120F1/zbk|sb04.dgn

STRUCTURES DESIGN DETAIL SHEET (METRIC) (REV.03-17-04)

DIST	COUNTY	ROUTE	KILOMETER POST TOTAL PROJECT	SHEET No	TOTAL SHEETS
04	SF	80	13.2/13.9	869R1	1204

REGISTERED CIVIL ENGINEER DATE

09/15/2006
PLANS APPROVAL DATE

The State of California or its officers or agents shall not be responsible for the accuracy or completeness of electronic copies of this plan sheet.

REGISTERED PROFESSIONAL ENGINEER EFTHYMIOS SELIS No. 51434 Exp. 6-30-08 CIVIL STATE OF CALIFORNIA

Caltrans now has a web site! To get to the web site, go to: http://www.dot.ca.gov

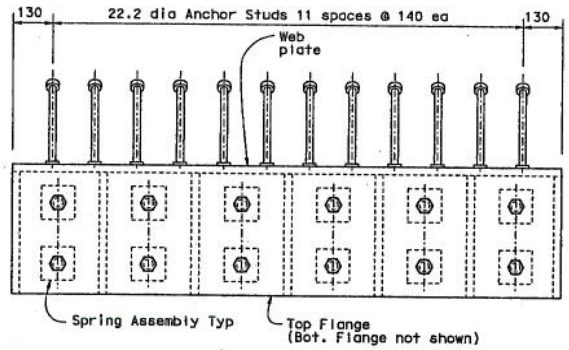

PLAN - BUILT UP CHANNEL ASSEMBLY "B" (TYP) 1

NO SCALE

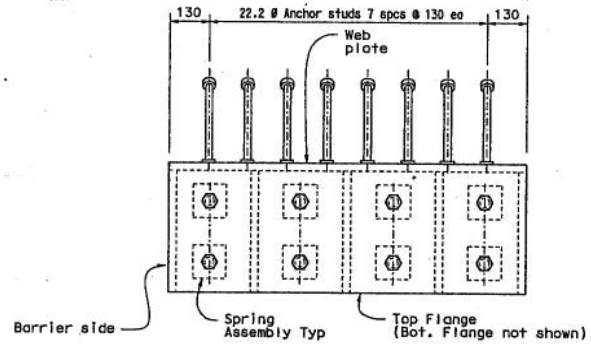

PLAN - BUILT UP CHANNEL ASSEMBLY "A" (TYP) 1

NO SCALE

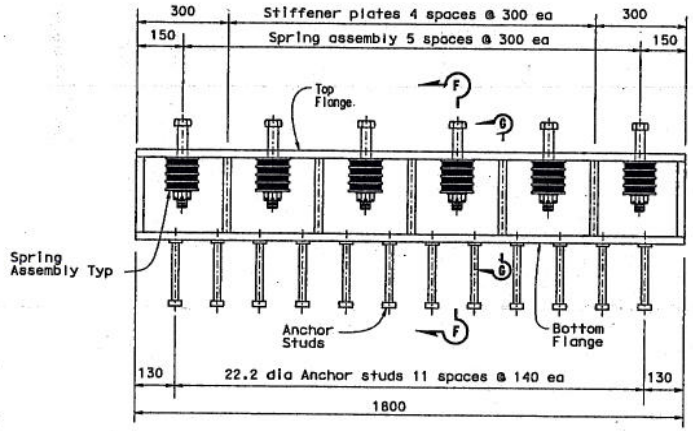

ELEVATION - BUILT UP CHANNEL ASSEMBLY "B" (TYP) 1

NO SCALE

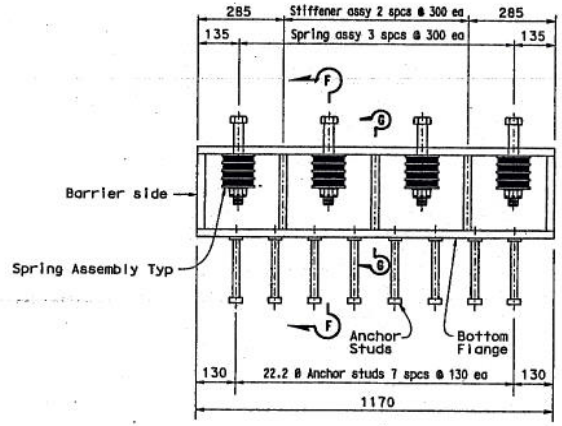

ELEVATION - BUILT UP CHANNEL ASSEMBLY "A" (TYP) 1

NO SCALE

NOTE:

For SECTIONS F-F and G-G See "CHANNEL ASSEMBLY DETAILS NO. 2" sheet

MARK	DATE	DESCRIPTIONS	BY	CH'D
1	9/15/06	Channel Improvements	TD	AK

REVISIONS

CONTRACT CHANGE ORDER NO. 25
SHEET ___ OF ___

THE CONTRACTOR SHALL VERIFY ALL CONTROLLING FIELD DIMENSIONS BEFORE ORDERING OR FABRICATING ANY MATERIAL.

Caltrans Metric

ALL DIMENSIONS ARE IN MILLIMETERS UNLESS OTHERWISE SHOWN

	BY	CHECKED
DESIGN	E DELIS	A KARTOUM
DETAILS	A R DUDSAK	A KARTOUM
QUANTITIES	E DELIS	A KARTOUM

ORIGINAL SCALE IN MILLIMETERS FOR REDUCED PLANS 0 10 20 30 40 50 60 70 80 90 100

STATE OF CALIFORNIA
DEPARTMENT OF TRANSPORTATION

DIVISION OF ENGINEERING SERVICES
STRUCTURE DESIGN
SPECIAL DESIGNS BRANCH

CU 04
EA 0120F1

BRIDGE NO. 34-0006 L/R
KILOMETER POST 13.2/13.9

SAN FRANCISCO OAKLAND BAY BRIDGE
EAST SPAN SEISMIC SAFETY PROJECT
SELF-ANCHORED SUSPENSION BRIDGE
(SUPERSTRUCTURE & TOWER)

SEISMIC JOINT (HINGE A)

CHANNEL ASSEMBLY DETAILS NO 1

DISREGARD PRINTS BEARING EARLIER REVISION DATES

REVISION DATES 1/20/06 3/24/06 11/30/06

SHEET 452R1 OF

USERNAME => TOUGBOK DATE PLOTTED => 31-OCT-2006 TIME PLOTTED => 08:09

DIST	COUNTY	ROUTE	KILOMETER POST TOTAL PROJECT	SHEET No	TOTAL SHEETS
04	SF	80	13.2/13.9	870R1	1204

REGISTERED CIVIL ENGINEER DATE

09/15/2006
PLANS APPROVAL DATE

REGISTERED PROFESSIONAL ENGINEER EFTHYMIOS DELIS No. 51434 Exp. 6-30-08 CIVIL STATE OF CALIFORNIA

The State of California or its officers or agents shall not be responsible for the accuracy or completeness of electronic copies of this plan sheet.

Caltrans now has a web site! To get to the web site, go to: http://www.dot.ca.gov

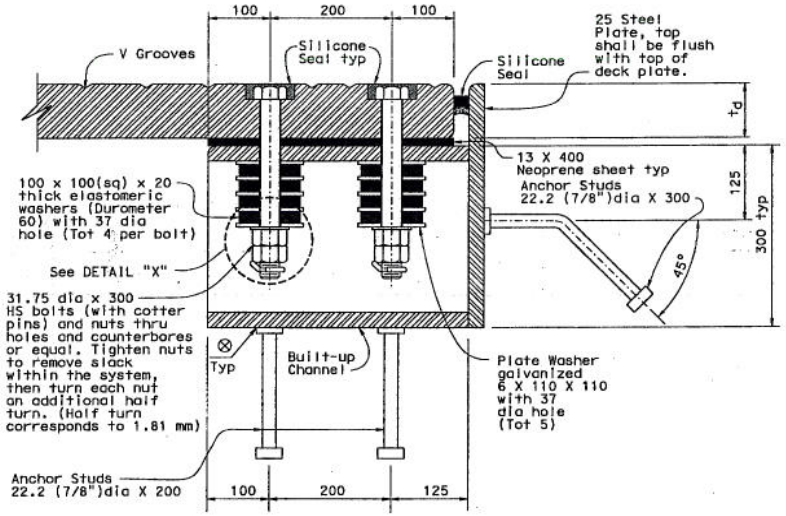

SECTION F-F 1
NO SCALE

NOTE:

1. For td value see "CROSS SECTION" sheet.

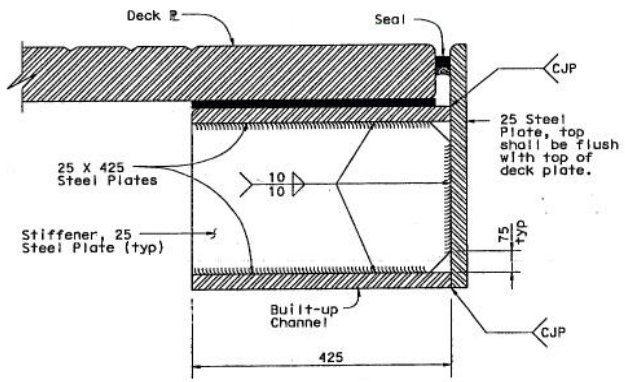

SECTION G-G 1
NO SCALE

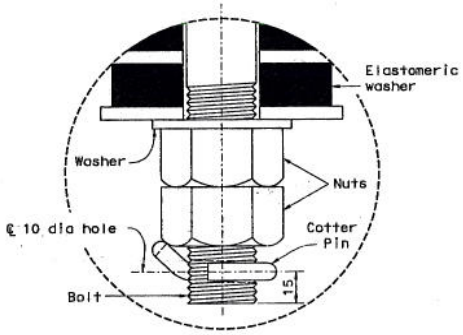

DETAIL X 1
NO SCALE

MARK	DATE	DESCRIPTIONS	BY	CH'D
1	9/15/06	Channel improvements	TD	AK

REVISIONS

CONTRACT CHANGE ORDER NO. 25
SHEET ___ OF ___

THE CONTRACTOR SHALL VERIFY ALL CONTROLLING FIELD DIMENSIONS BEFORE ORDERING OR FABRICATING ANY MATERIAL.

SAN FRANCISCO OAKLAND BAY BRIDGE
EAST SPAN SEISMIC SAFETY PROJECT

SELF-ANCHORED SUSPENSION BRIDGE
(SUPERSTRUCTURE & TOWER)

SEISMIC JOINT (HINGE A)

CHANNEL ASSEMBLY DETAILS NO 2

Caltrans Metric

	BY	CHECKED
DESIGN	E DEUS	A KARTOUM
DETAILS	A R DUDSAK	A KARTOUM
QUANTITIES	E DEUS	A KARTOUM

STATE OF CALIFORNIA
DEPARTMENT OF TRANSPORTATION

DIVISION OF ENGINEERING SERVICES
STRUCTURE DESIGN
SPECIAL DESIGNS BRANCH

BRIDGE NO. 34-0006 L/R
KILOMETER POST 13.2/13.9

ALL DIMENSIONS ARE IN MILLIMETERS UNLESS OTHERWISE SHOWN

ORIGINAL SCALE IN MILLIMETERS FOR REDUCED PLANS 0 10 20 30 40 50 60 70 80 90 100

CU 04
EA 0120F1

DISREGARD PRINTS BEARING EARLIER REVISION DATES → 1/26/06 5/31/06 03/20/06

REVISION DATES

SHEET 453R1 OF

[FILE => spec_des_br_proj/04-0120F1/zbk|sb08.dgn

STRUCTURES DESIGN DETAIL SHEET (METRIC) (REV.03-17-04)

DIST	COUNTY	ROUTE	KILOMETER POST TOTAL PROJECT	SHEET No	TOTAL SHEETS
04	SF	80	13.2/13.9	871R1	1204

REGISTERED CIVIL ENGINEER DATE

09-15-2006
PLANS APPROVAL DATE

REGISTERED PROFESSIONAL ENGINEER EFTHYMIOS DELIS No. 51434 Exp. 6-30-08 CIVIL STATE OF CALIFORNIA

The State of California or its officers or agents shall not be responsible for the accuracy or completeness of electronic copies of this plan sheet.

Caltrans now has a web site! To get to the web site, go to: http://www.dot.ca.gov

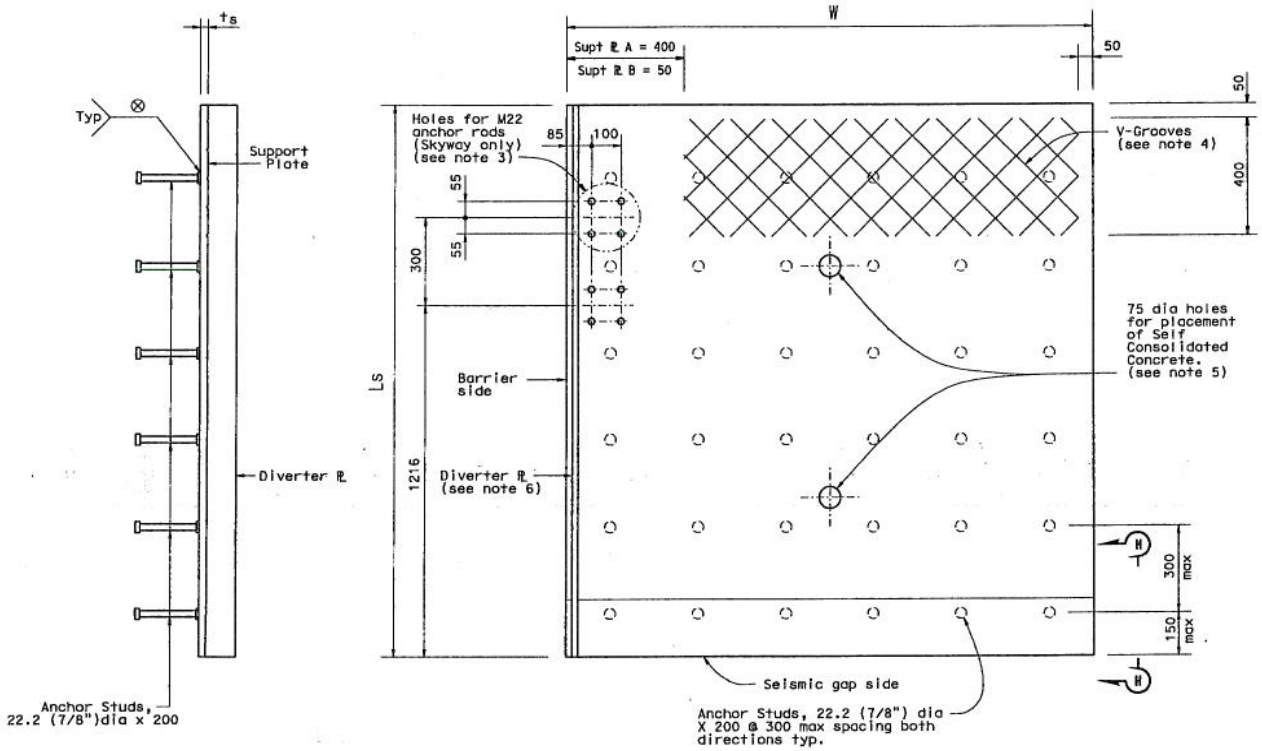

SIDE VIEW
NO SCALE

PLAN VIEW
NO SCALE

SUPPORT PLATE DETAILS 2

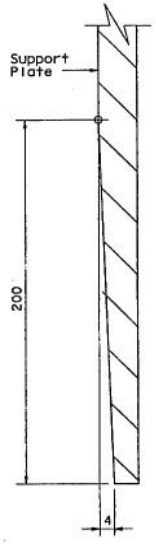

VIEW H-H 1
NO SCALE

MARK	DATE	DESCRIPTIONS	BY	CH'D
2	12/18/07	Support ℄ improvements	TD	AK
1	9/15/06	Support ℄ improvements	TD	AK

REVISIONS

CONTRACT CHANGE ORDER NO. 25
SHEET ___ OF ___

SUPPORT PLATE WIDTH
MODULE A; W = 1600
MODULE B; W = 1800

2

NOTES: 2

1. For Ls and ts values see "CROSS SECTION" sheet.
2. Support Plate A shown, Support Plate B similar.
3. Install anchor rod holes in support plate Module A at barrier side only of Self-Anchored Suspension Bridge and Skyway Structure as indicated. Coordinate anchor rod holes to align with those in the barrier.
4. For V-Groove details see "DECK PLATE DETAILS NO 2" sheet.
5. Exact location of 75 dia holes to be determined prior to support plate fabrication.
6. For diverter plate details see "DECK PLATE DETAILS NO 2" sheet. Diverter plate applies only to support P A.

   For diverter plate details see "DECK PLATE DETAILS NO 2" sheet. Diverter plate applies only to support ℄ A.

THE CONTRACTOR SHALL VERIFY ALL CONTROLLING FIELD DIMENSIONS BEFORE ORDERING OR FABRICATING ANY MATERIAL.

SAN FRANCISCO OAKLAND BAY BRIDGE
EAST SPAN SEISMIC SAFETY PROJECT

SELF-ANCHORED SUSPENSION BRIDGE
(SUPERSTRUCTURE & TOWER)

SEISMIC JOINT (HINGE A)

SUPPORT PLATE DETAILS

Caltrans Metric

	BY	CHECKED
DESIGN	E DELIS	A KARTOUM
DETAILS	A R DUDSAK	A KARTOUM
QUANTITIES	E DELIS	A KARTOUM

STATE OF CALIFORNIA
DEPARTMENT OF TRANSPORTATION

DIVISION OF ENGINEERING SERVICES
STRUCTURE DESIGN
SPECIAL DESIGNS BRANCH

BRIDGE NO. 34-0006 L/R
KILOMETER POST 13.2/13.9

ALL DIMENSIONS ARE IN MILLIMETERS UNLESS OTHERWISE SHOWN

ORIGINAL SCALE IN MILLIMETERS FOR REDUCED PLANS 0 10 20 30 40 50 60 70 80 90 100

CU 04
EA 0120F1

DISREGARD PRINTS BEARING EARLIER REVISION DATES

REVISION DATES 12/18/07 9/15/06 10/20/05

SHEET 454R1 OF

(FILE => aaec des br proj/04-0120F1/2bklsb07.dgn

STRUCTURES DESIGN DETAIL SHEET (METRIC) (REV.03-17-04)

TIME PRINTED => 10:21
DATE PRINTED => 18-OCT-2007
USERNAME => tdudsak

DIST	COUNTY	ROUTE	KILOMETER POST TOTAL PROJECT	SHEET No	TOTAL SHEETS
04	SF	80	13.2/13.9	872R1	1204

REGISTERED CIVIL ENGINEER DATE

09-15-2006

PLANS APPROVAL DATE

REGISTERED PROFESSIONAL ENGINEER EFTHYMIOS DELIS No. 51434 Exp. 6-30-08 CIVIL STATE OF CALIFORNIA

The State of California or its officers or agents shall not be responsible for the accuracy or completeness of electronic copies of this plan sheet.

Caltrans now has a web site! To get to the web site, go to: http://www.dot.ca.gov

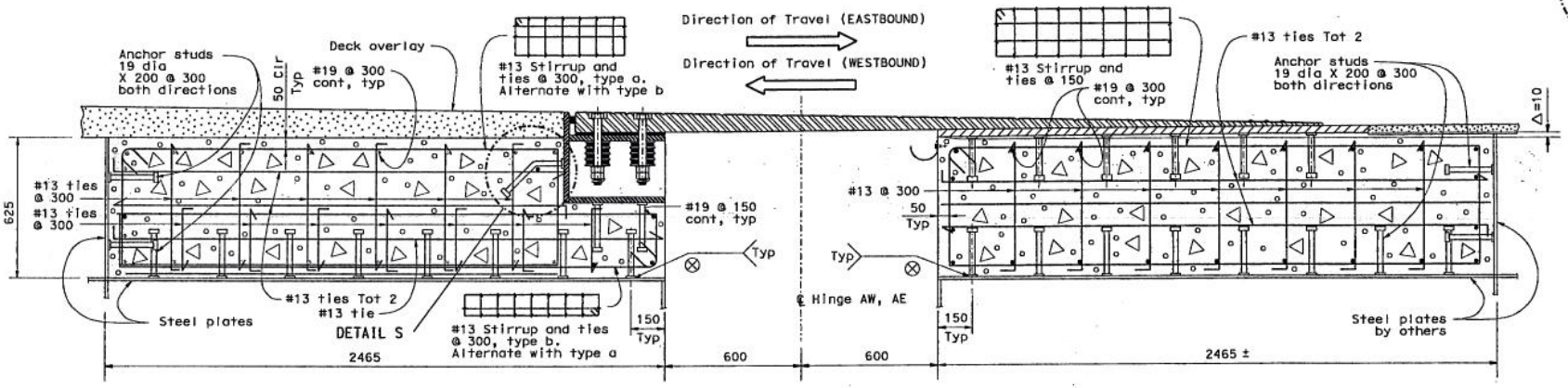

SAS SIDE

SKYWAY SIDE

ELEVATION 2
SCALE 1:10

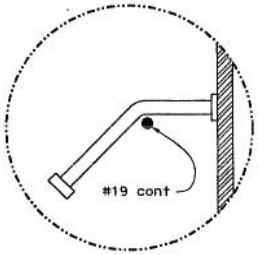

DETAIL S 2

MARK	DATE	DESCRIPTIONS	BY	CH'D
2	12/18/07	Block out details	TD	AK
1	9/15/06	Block out details	TD	AK

REVISIONS

CONTRACT CHANGE ORDER NO. 25
SHEET ___ OF ___

NOTE:
Seismic gap shown position at 20°C.

THE CONTRACTOR SHALL VERIFY ALL CONTROLLING FIELD DIMENSIONS BEFORE ORDERING OR FABRICATING ANY MATERIAL.

SAN FRANCISCO OAKLAND BAY BRIDGE
EAST SPAN SEISMIC SAFETY PROJECT

SELF-ANCHORED SUSPENSION BRIDGE
(SUPERSTRUCTURE & TOWER)

SEISMIC JOINT (HINGE A)

REINFORCEMENT DETAILS

Caltrans Metric

	BY	CHECKED
DESIGN	E DELIS	A KARTOUM
DETAILS	A R DUDSAK	A KARTOUM
QUANTITIES	E DELIS	A KARTOUM

STATE OF CALIFORNIA
DEPARTMENT OF TRANSPORTATION

DIVISION OF ENGINEERING SERVICES
STRUCTURE DESIGN
SPECIAL DESIGNS BRANCH

BRIDGE NO. 34-0006 L/R
KILOMETER POST 13.2/13.9

ALL DIMENSIONS ARE IN MILLIMETERS UNLESS OTHERWISE SHOWN

ORIGINAL SCALE IN MILLIMETERS FOR REDUCED PLANS 0 10 20 30 40 50 60 70 80 90 100

CU 04
EA 0120F1

DISREGARD PRINTS BEARING EARLIER REVISION DATES 1/24/06 1/18/06 10/30/06

REVISION DATES

SHEET 455R1 OF

FILE => spec_des_br_proj/04-0120F1/zbk|sb08.dgn

STRUCTURES DESIGN DETAIL SHEET (METRIC) (REV.03-17-04)

DIST	COUNTY	ROUTE	TOTAL PROJECT	NO	SHEETS
04	SF	80	13.2/13.9	87251	1204

REGISTERED CIVIL ENGINEER DATE

09/15/2006

PLANS APPROVAL DATE

REGISTERED PROFESSIONAL ENGINEER — EFTHYMIOS DELIS — No. 51434 — Exp. 6-30-08 — CIVIL — STATE OF CALIFORNIA

The State of California or its officers or agents shall not be responsible for the accuracy or completeness of electronic copies of this plan sheet.

Caltrans now has a web site! To get to the web site, go to: http://www.dot.ca.gov

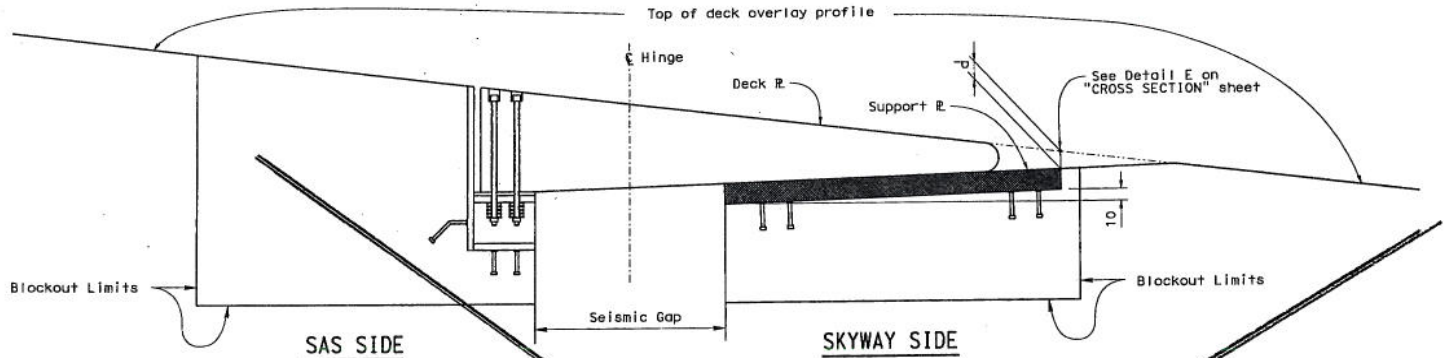

INSTALLATION DETAIL

NO SCALE

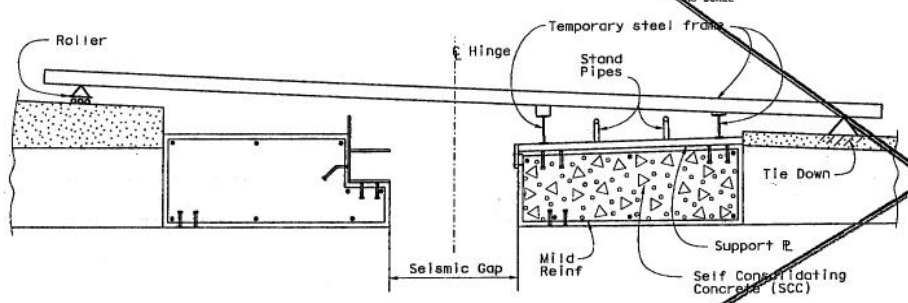

STEP 1

NO SCALE

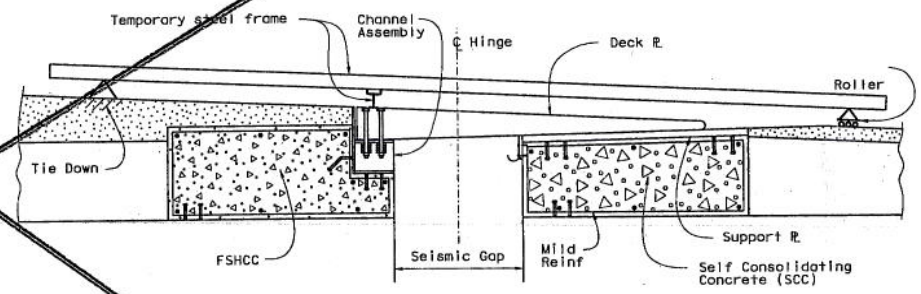

STEP 2

NO SCALE

SCHEMATIC CONSTRUCTION SEQUENCE (1)

NO SCALE

- Place anchor studs and mild reinforcement in blockout areas.
- Install temporary steel frame.
- For each joint module, place support plate at elevations and locations shown on plans.
- Align all joint modules together and secure them.
- Pour self consolidating concrete (SCC) below support plate.
- Let SCC set and reach 14 MPa strength min.
- Remove stand pipes and clean top surface of support plates.

- Steel frame supports are changed so frame is tied down on channel assembly side and is free to move on support plate side.
- For each joint module, place channel assembly and deck plate at elevations and locations shown on plans. Channel assembly sits suspended from steel frame. Deck plate sits on support plate and channel assembly. Make adjustments so full bearing between deck and support plates is achieved.
- Align all joint modules together and secure them.
- Pour Fast Setting Hydraulic Cement Concrete (FSHCC) in the channel assembly blockout area.
- Let FSHCC set for at least 3 hours minimum.
- Tighten bolts and place cotter pins.
- Install gutter.
- Seal joint with silicone seal.

NOTES:

1. Not all reinforcement and joint details are shown for clarity.

THE CONTRACTOR SHALL VERIFY ALL CONTROLLING FIELD DIMENSIONS BEFORE ORDERING OR FABRICATING ANY MATERIAL.

SAN FRANCISCO OAKLAND BAY BRIDGE
EAST SPAN SEISMIC SAFETY PROJECT

SELF-ANCHORED SUSPENSION BRIDGE
(SUPERSTRUCTURE & TOWER)

SEISMIC JOINT (HINGE A)

CONSTRUCTION SEQUENCE

Caltrans Metric

	BY	CHECKED
DESIGN	E DELIS	A KARTOUM
DETAILS	A R DUDSAK	A KARTOUM
QUANTITIES	E DELIS	A KARTOUM

STATE OF CALIFORNIA
DEPARTMENT OF TRANSPORTATION

DIVISION OF ENGINEERING SERVICES
STRUCTURE DESIGN
SPECIAL DESIGNS BRANCH

BRIDGE NO. 34-0006 L/R
KILOMETER POST 13.2/13.9

CU 04
EA 0120F1

DISREGARD PRINTS BEARING EARLIER REVISION DATES 1/26/06 8/18/06 10/30/06

REVISION DATES

SHEET 455S1 OF

ALL DIMENSIONS ARE IN MILLIMETERS UNLESS OTHERWISE SHOWN

ORIGINAL SCALE IN MILLIMETERS FOR REDUCED PLANS 0 10 20 30 40 50 60 70 80 90 100

FILE => spec_des_br_proj/04-0120F1/ZDR/sd09.dgn

STRUCTURES DESIGN DETAIL SHEET (METRIC) (REV.03-17-04)