| DIST. | COUNTY | ROUTE | KILOMETER POST TOTAL PROJECT | SHEET NO. | TOTAL SHEETS |
|---|---|---|---|---|---|
| 04 | SF | 80 | 13.2/13.9 | 864S6R2 | 1204 |

Caltrans Metric

REGISTERED ENGINEER - CIVIL

07-30-10
PLANS APPROVAL DATE

REGISTERED PROFESSIONAL ENGINEER Marwan N. Nader No. C 054426 Exp. 12/31/11 CIVIL STATE OF CALIFORNIA

*The State of California or its officers or agents shall not be responsible for the accuracy or completeness of electronic copies of this plan sheet.*

T.Y. LIN / MOFFATT & NICHOL
825 BATTERY STREET
SAN FRANCISCO, CA 94111

*Caltrans now has a web site! To get to the web site, go to: http://www.dot.ca.gov*

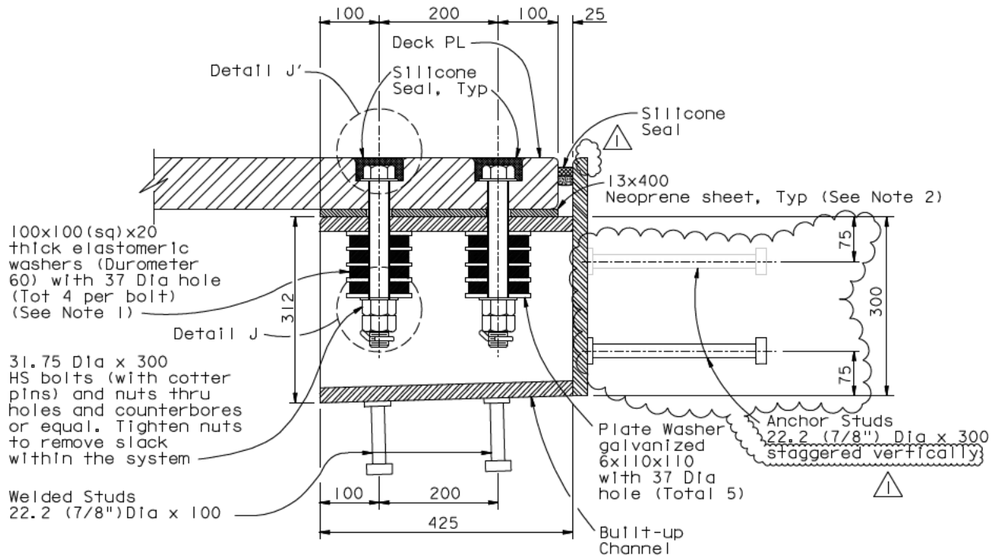


SECTION H-H
NTS

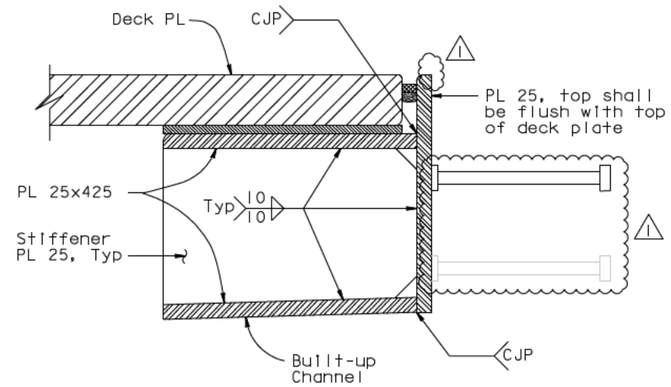


SECTION H'-H'
NTS

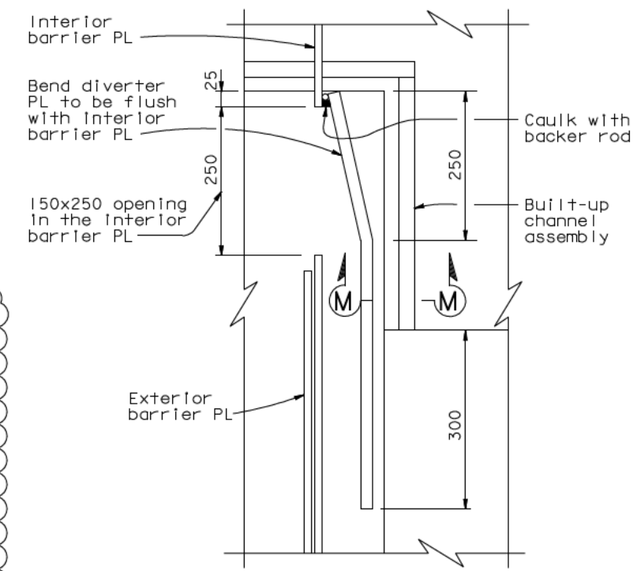


DETAIL L
1:5

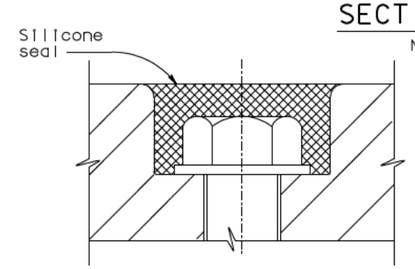


DETAIL J'
NTS

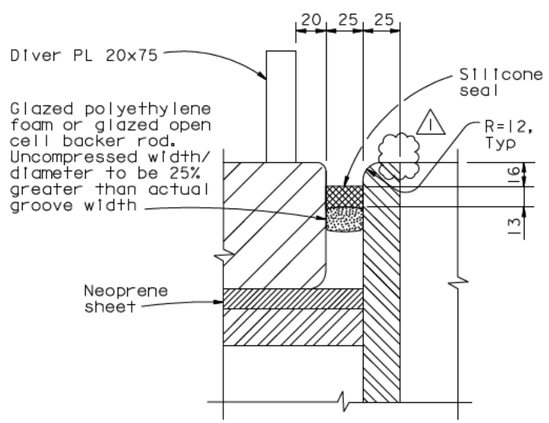


SECTION M-M
NTS

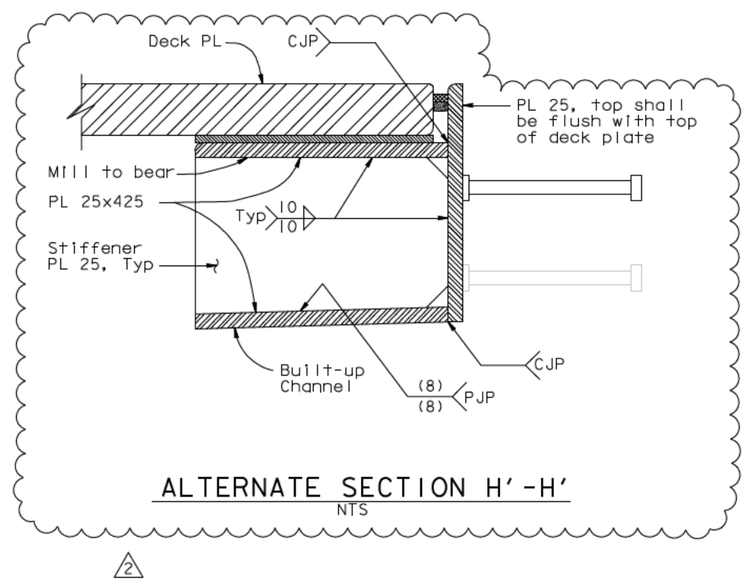


ALTERNATE SECTION H'-H'
NTS

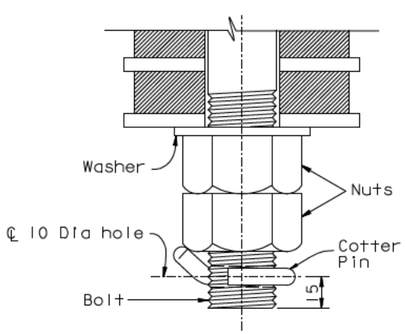


DETAIL J
NTS

NOTES:

1. Elastomeric washers shall be plain neoprene.
2. The length of the 13x400 mm neoprene sheet below the deck plate is 1365 mm and 1800 mm long for modules "A" and "B" respectively.

CONTRACT CHANGE ORDER NO.
SHEET ____ OF ____

*REQUESTS FOR INFORMATION NOT ADDRESSED IN THIS CCO REMAIN IN FORCE*

| MARK | DATE | DESCRIPTIONS | BY | CH'D | CCO# |
|---|---|---|---|---|---|
| 2 | 08/05/11 | SEISMIC JOINT MODIFICATIONS HINGE A | CR | MN | 25 |
| 1 | 12/30/10 | SEISMIC JOINT MODIFICATIONS HINGE A | CR | MN | 25 |
| 0 | 07/30/10 | SEISMIC JOINT MODIFICATIONS HINGE A | CR | MN | 25 |

REVISIONS

R. Valizadeh/V. Toan/Y.L./W.L./F.C.
DESIGN OVERSIGHT
SIGN OFF DATE 08/09/11

| | | | |
|---|---|---|---|
| DESIGN | BY C. Redfield | CHECKED M. Nader | |
| DETAILS | BY H. Patel | CHECKED M. Benolt | |
| QUANTITIES | BY H. Patel | CHECKED J. Duxbury | |

**PREPARED FOR THE STATE OF CALIFORNIA DEPARTMENT OF TRANSPORTATION**

R. Manzanarez
PROJECT ENGINEER

ALL DIMENSIONS ARE IN MILLIMETERS UNLESS OTHERWISE SHOWN

BRIDGE NO. 34-0006L/R
KILOMETER POST 13.2/13.9

SAN FRANCISCO OAKLAND BAY BRIDGE
EAST SPAN SEISMIC SAFETY PROJECT
SELF-ANCHORED SUSPENSION BRIDGE
(SUPERSTRUCTURE & TOWER)

# HINGE A EXPANSION JOINT DETAILS NO. 8

Rev. Date: 5-18-98

ORIGINAL SCALE IN MILLIMETERS FOR REDUCED PLANS 0 10 20 30 40 50 60 70 80 90 100

CU 04
EA 0120F1

DISREGARD PRINTS BEARING EARLIER REVISION DATES 07/30/10

REVISION DATES (PRELIMINARY STAGE ONLY)

SHEET 447S6R2 OF

FILE -> I:\bb\04-012001\sas\contract plans and cco\cco\cco#25\9-revision 08-05-11\dgn\akjnt01f.dgn

100% PS&E

USERNAME -> DWinrow DATE PLOTTED -> 05 AUG 2011 TIME PLOTTED -> 15:13:21