DIST.	COUNTY	ROUTE	KILOMETER POST TOTAL PROJECT	SHEET NO.	TOTAL SHEETS
04	SF	80	13.2/13.9	864S3R1	1204

REGISTERED ENGINEER - CIVIL

07-30-10

PLANS APPROVAL DATE

The State of California or its officers or agents shall not be responsible for the accuracy or completeness of electronic copies of this plan sheet.

REGISTERED PROFESSIONAL ENGINEER Marwan N. Nader No. C 054426 Exp. 12/31/11 CIVIL STATE OF CALIFORNIA

T.Y. LIN / MOFFATT & NICHOL
825 BATTERY STREET
SAN FRANCISCO, CA 94111

Caltrans now has a web site! To get to the web site, go to: http://www.dot.ca.gov

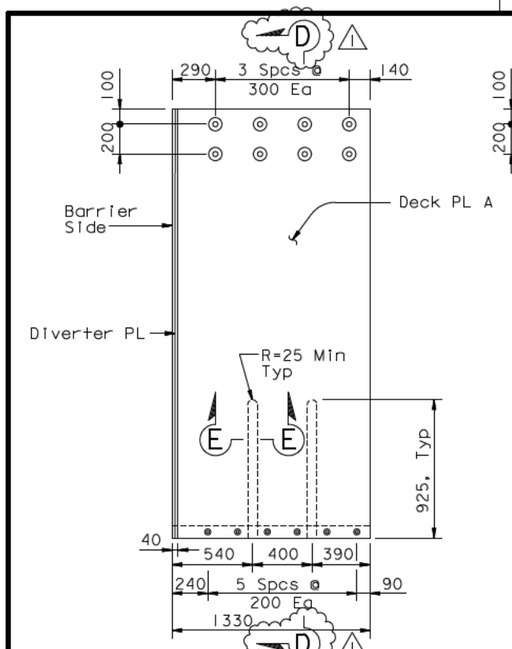

DECK PLATE A
1:20

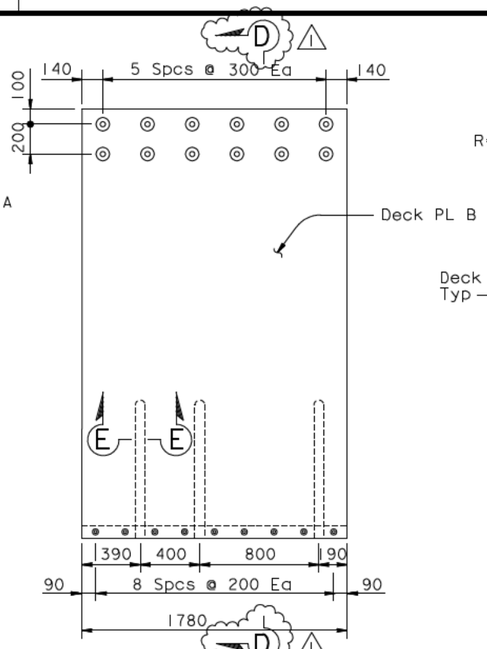

DECK PLATE B
1:20

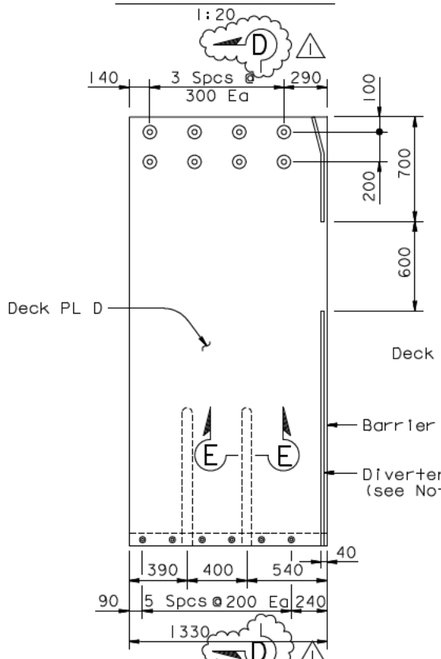

DECK PLATE D
1:20

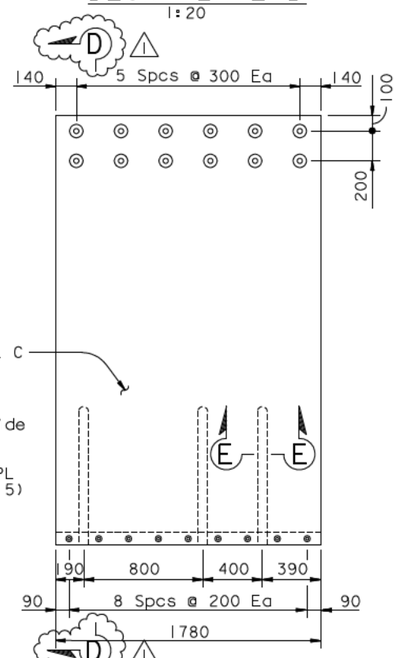

DECK PLATE C
1:20

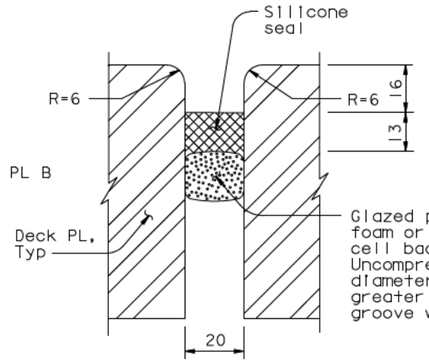

SECTION C-C
1:1

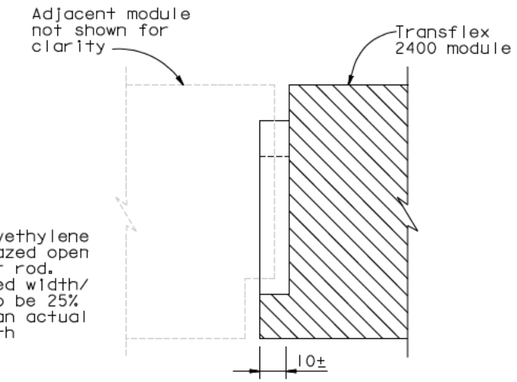

SECTION C'-C'
1:1

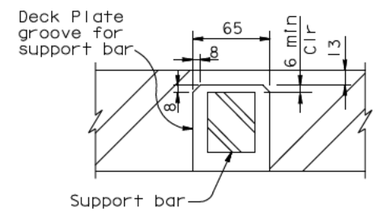

SECTION E-E
1:2.5

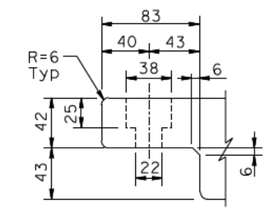

DETAIL E
1:2.5

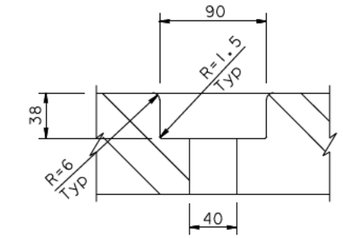

DETAIL F
1:2.5

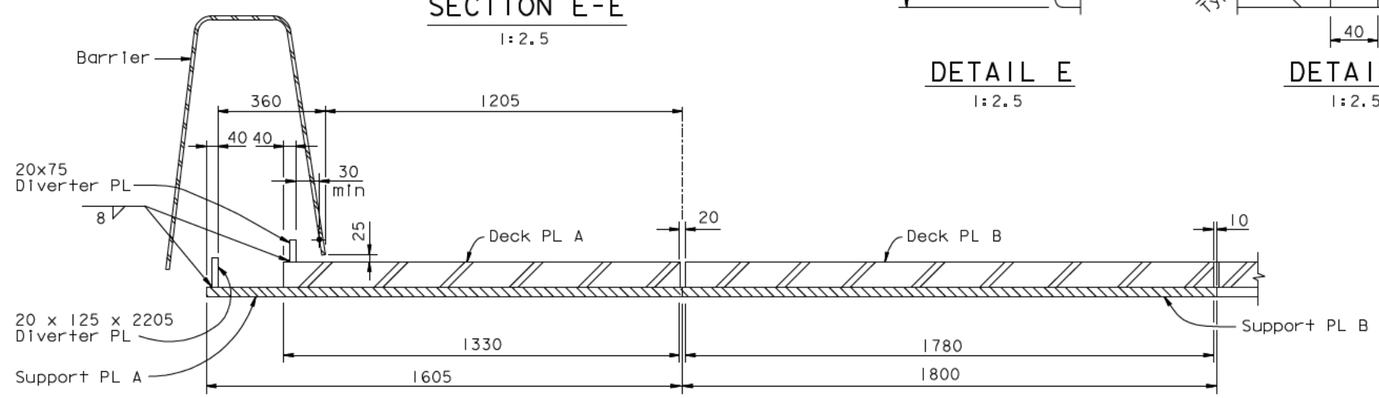

SECTION B-B
1:10

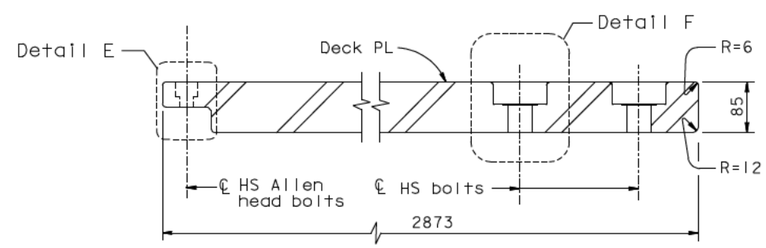

SECTION D-D
1:5

NOTES:

1. For deck plate plan see "Hinge A Expansion Joint Details No.3" sheet.
2. Diverter plate applies to Deck plates A and D and Support plate A only.
3. For bolting of deck plates to channel assembly details, see "Hinge A Expansion Joint Details No. 8" sheet.
4. For connection detail between Trelleborg Transflex 2400 and deck plate see, "Hinge A Expansion Joint Details No. 4" sheet.
5. For diverter plate detail on Deck PL D, see Detail L on "Hinge A Expansion Joint Details No.8" sheet.

CONTRACT CHANGE ORDER NO. ____
SHEET ____ OF ____

REQUESTS FOR INFORMATION NOT ADDRESSED IN THIS CCO REMAIN IN FORCE

ALL DIMENSIONS ARE IN MILLIMETERS UNLESS OTHERWISE SHOWN

R. Valizadeh/V. Toan/Y.L./W.L./F.C.
DESIGN OVERSIGHT
SIGN OFF DATE 12/30/10

MARK	DATE	DESCRIPTIONS	BY	CH'D	CCO#
1	12/30/10	SEISMIC JOINT MODIFICATIONS HINGE A	CR	MN	25
0	07/30/10	SEISMIC JOINT MODIFICATIONS HINGE A	CR	MN	25

REVISIONS

	BY	CHECKED
DESIGN	C. Redfield	M. Nader
DETAILS	H. Patel	M. Benolt
QUANTITIES	H. Patel	J. Duxbury

PREPARED FOR THE STATE OF CALIFORNIA DEPARTMENT OF TRANSPORTATION

R. Manzanarez
PROJECT ENGINEER

BRIDGE NO. 34-0006L/R
KILOMETER POST 13.2/13.9

SAN FRANCISCO OAKLAND BAY BRIDGE
EAST SPAN SEISMIC SAFETY PROJECT
SELF-ANCHORED SUSPENSION BRIDGE
(SUPERSTRUCTURE & TOWER)

HINGE A EXPANSION JOINT DETAILS NO.5

Rev. Date: 5-18-98

ORIGINAL SCALE IN MILLIMETERS FOR REDUCED PLANS 0 10 20 30 40 50 60 70 80 90 100

CU 04
EA 0120F1

DISREGARD PRINTS BEARING EARLIER REVISION DATES 07/30/10

REVISION DATES (PRELIMINARY STAGE ONLY)

SHEET 447S3R1 OF

FILE => I:\bb\04-01200I\sas\contract plans and cco\cco\cco#25\7-revision 12-30-10\dgn\akjnt01c.dgn

USERNAME => DWinrow DATE PLOTTED => 30 DEC 2010 TIME PLOTTED => 13:21:49

100 % PS&E