DIST.	COUNTY	ROUTE	KILOMETER POST TOTAL PROJECT	SHEET NO.	TOTAL SHEETS
04	SF	80	13.2/13.9	852R3	1204

REGISTERED ENGINEER - CIVIL

12-6-04
PLANS APPROVAL DATE

REGISTERED PROFESSIONAL ENGINEER Marwan N. Nader No. C 054426 Exp. 12/31/11 CIVIL STATE OF CALIFORNIA

The State of California or its officers or agents shall not be responsible for the accuracy or completeness of electronic copies of this plan sheet.

T.Y. LIN / MOFFATT & NICHOL
825 BATTERY STREET
SAN FRANCISCO, CA 94111

Caltrans now has a web site! To get to the web site, go to: http://www.dot.ca.gov

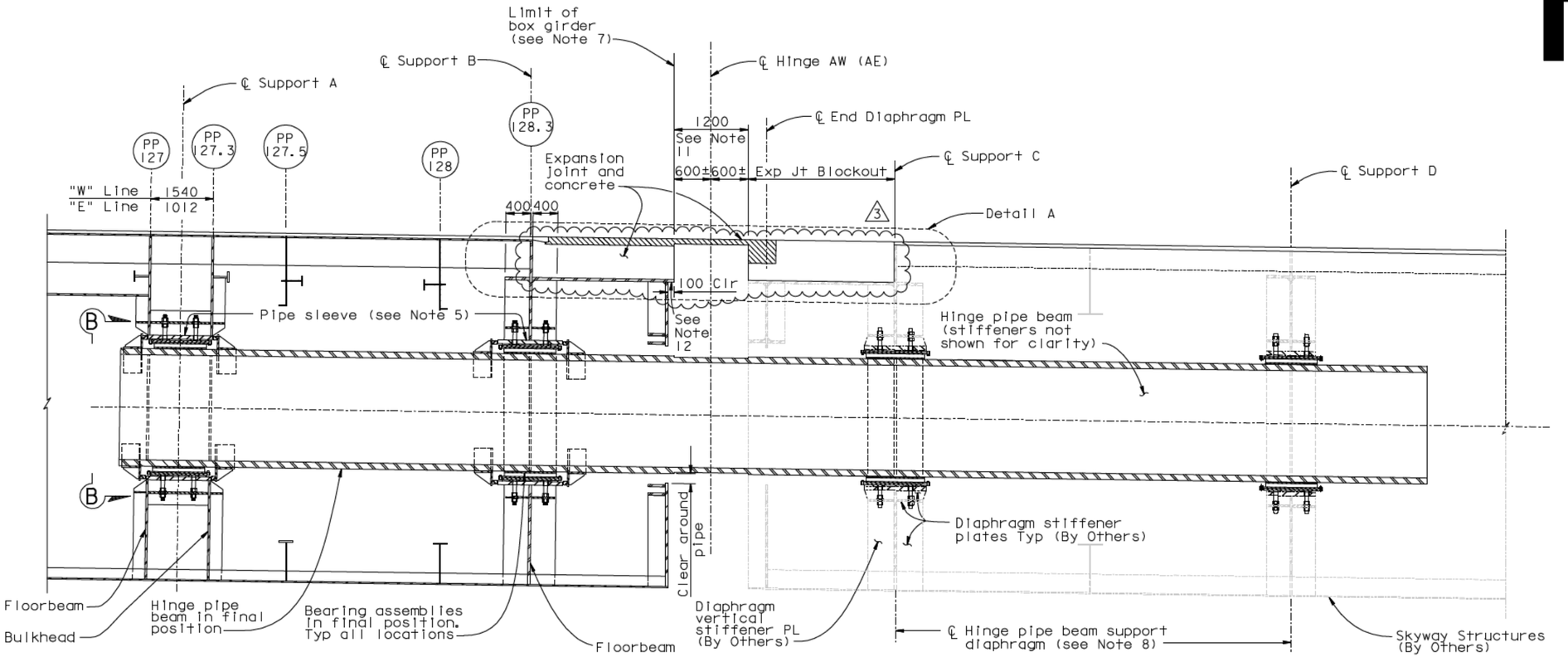

SECTION A-A
(Orientation of Expansion Joint shown for Eastbound, see Note 10)
1:40

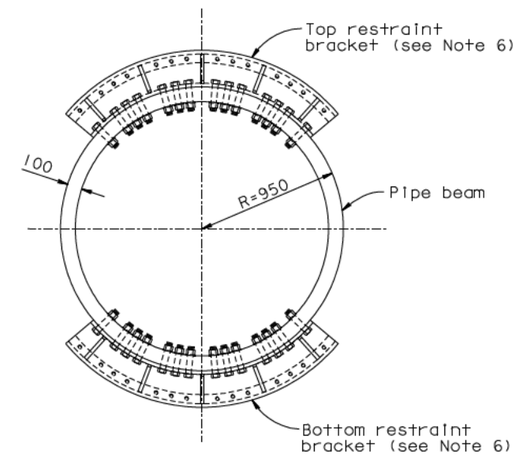

END VIEW B-B
1:20

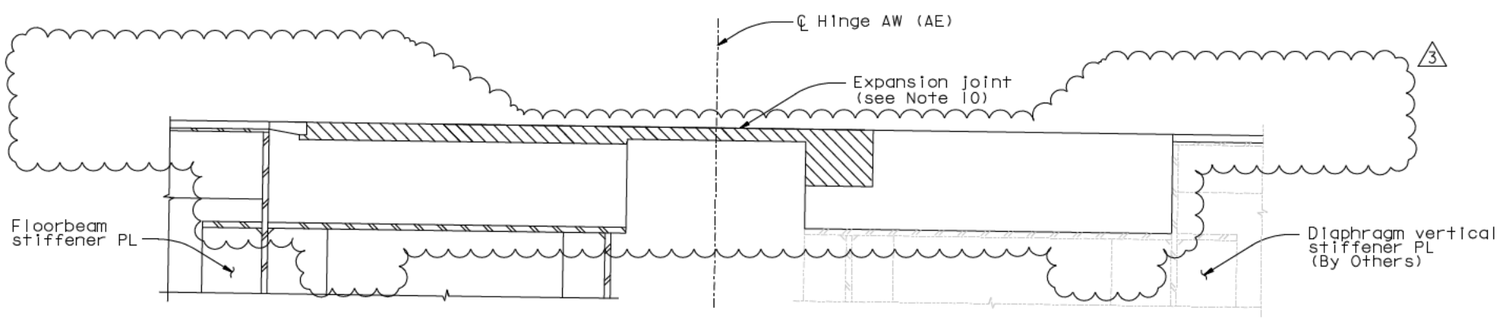

DETAIL A
1:20

NOTES:

1. For locations and alignment of floor beams at PP127, PP127.5 and PP128, see "Girder Framing Plan No. 4" sheet.
2. Bulkhead at PP127.3 is parallel to the floor beam at PP 127.
3. Floorbeam at PP 128.3 is parallel to ℄ Hinge A. For locations, see "Hinge A Geometry Layout" sheets.
4. For expansion joint details, see "Hinge A Expansion Joint Details" sheets.
5. Pipe sleeve shall be parallel to pipe beam.
6. For restraint bracket details, see "Hinge A Details No. 9" sheet.
7. For girder details east of PP 128.3, see "Girder At East Transition No. 8" and "Floorbeam At East Transition No. 10" sheets.
8. For hinge bearing support location, see "Hinge A Geometry Layout" sheets.
9. For "Hinge A Details" sheets, the Contractor shall verify all controlling field dimensions before ordering or fabricating any material.
10. For orientation of expansion joints, see "Hinge A Expansion Joint Details" plans. (3)
11. The as-built gap at Hinge A shall be 1200 minimum. The limit of the concrete blockout shall be adjusted based on the field conditions of the Skyway.
12. The Contractor shall trim the blockout end PL and blockout bottom PL to maintain an expansion gap of 1200 minimum.

CONTRACT CHANGE ORDER NO. ____
SHEET ____ OF ____

REQUESTS FOR INFORMATION NOT ADDRESSED IN THIS CCO REMAIN IN FORCE

MARK	DATE	DESCRIPTIONS	BY	CH'D	CCO#
3	07/30/10	SEISMIC JOINT MODIFICATIONS HINGE A	CR	MN	25
2	04/09/10	HINGE A MODIFICATIONS	MN	NV	120
1	11/06/06	PER CALTRANS SEISMIC JOINT MODIFICATION	MN	AS	25

REVISIONS

ALL DIMENSIONS ARE IN MILLIMETERS UNLESS OTHERWISE SHOWN

R. Vallizadeh/V. Toan/Y.L./W.L./F.C.
DESIGN OVERSIGHT
Y. Liu
SIGN OFF DATE 07/30/10

	BY	CHECKED
DESIGN	M. Nader	N. Vo
DETAILS	G. Baker	N. Vo
QUANTITIES	G. Baker	N. Vo

PREPARED FOR THE STATE OF CALIFORNIA DEPARTMENT OF TRANSPORTATION

R. Manzanarez
PROJECT ENGINEER

BRIDGE NO. 34-0006L/R
KILOMETER POST 13.2/13.9

SAN FRANCISCO OAKLAND BAY BRIDGE
EAST SPAN SEISMIC SAFETY PROJECT
SELF-ANCHORED SUSPENSION BRIDGE
(SUPERSTRUCTURE & TOWER)

HINGE A DETAILS NO. 1

Rev. Date: 5-18-98

ORIGINAL SCALE IN MILLIMETERS FOR REDUCED PLANS 0 10 20 30 40 50 60 70 80 90 100

CU 04
EA 0120F1

DISREGARD PRINTS BEARING EARLIER REVISION DATES

REVISION DATES (PRELIMINARY STAGE ONLY) 05/17/01 04/08/02 07/01/02 12/18/02 07/18/03

SHEET 435R3 OF

FILE -> I:\bb\04-012001\sas\contract plans and cco\cco\cco#25\5-revision 07-30-10\dgn\ahhng01.dgn

100 % PS&E

USERNAME -> grivera DATE PLOTTED -> 30 JUL 2010 TIME PLOTTED -> 11:34:01