DIST.	COUNTY	ROUTE	KILOMETER POST TOTAL PROJECT	SHEET NO.	TOTAL SHEETS
04	SF	80	13.2/13.9	1140R1	1204

Caltrans Metric

REGISTERED ENGINEER - CIVIL

12-6-04
PLANS APPROVAL DATE

REGISTERED PROFESSIONAL ENGINEER Rafael Manzanarez No. C 36842 Exp. 6/30/12 CIVIL STATE OF CALIFORNIA

The State of California or its officers or agents shall not be responsible for the accuracy or completeness of electronic copies of this plan sheet.

T.Y. LIN / MOFFATT & NICHOL
825 BATTERY STREET
SAN FRANCISCO, CA 94111

Caltrans now has a web site! To get to the web site, go to: http://www.dot.ca.gov

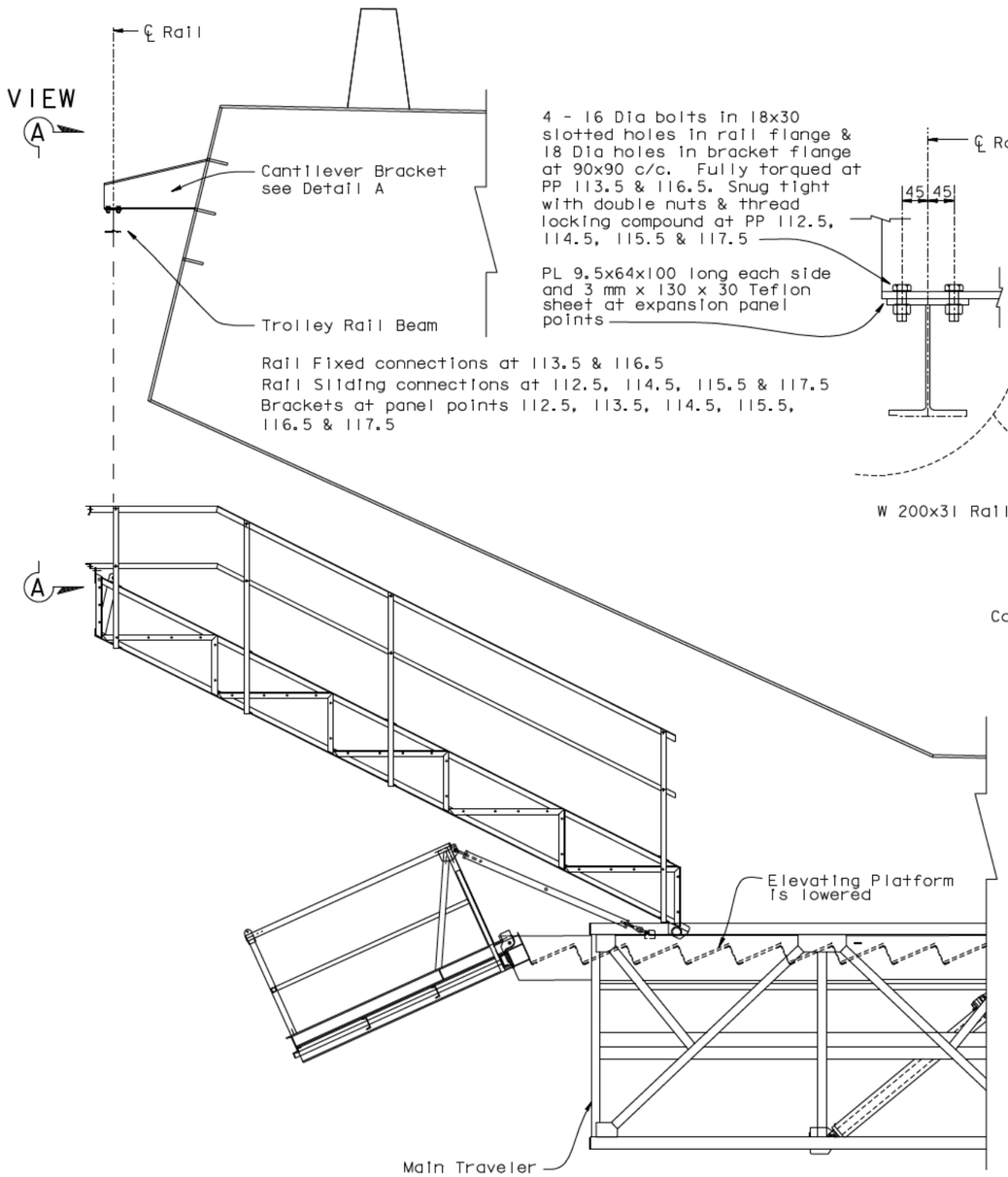

Rail Fixed connections at 113.5 & 116.5
Rail Sliding connections at 112.5, 114.5, 115.5 & 117.5
Brackets at panel points 112.5, 113.5, 114.5, 115.5, 116.5 & 117.5

SUPPLEMENTARY PLATFORM ASSEMBLED
SECTION
SHOWN AT PP 118
1:25

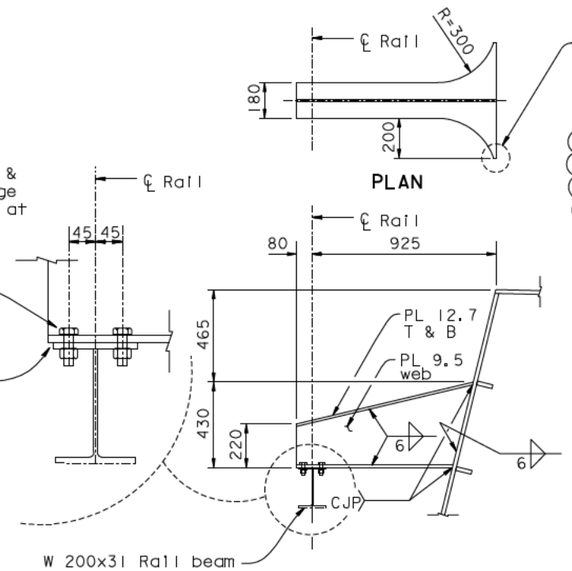

DETAIL A
1:5
Cantilever at PP 112.5 to 117.5

Terminate flanges as per typical stiffener termination detail in "Typical Floorbeam No. 4" sheet.

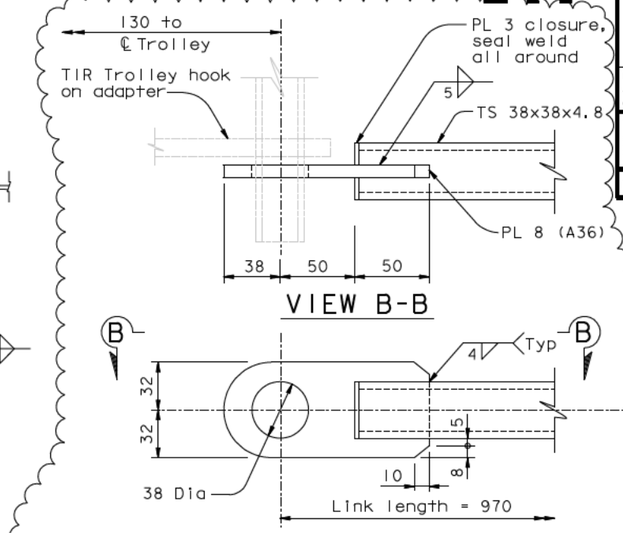

SUPPLEMENTARY PLATFORM TROLLEY LINK (See Note 14)
1:2

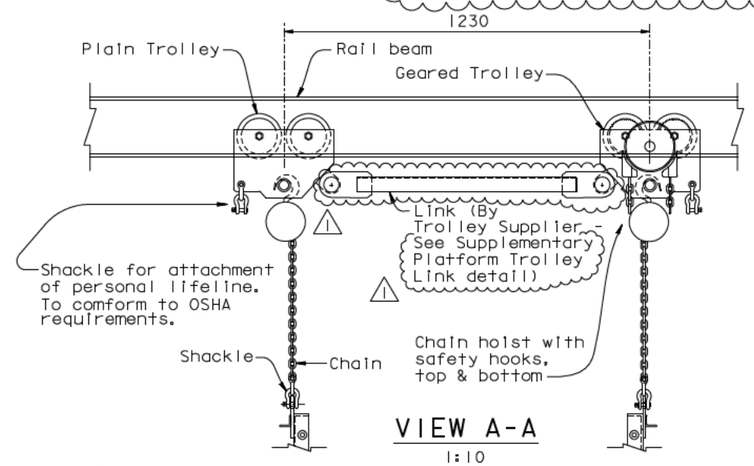

1:10

12. Installation procedure.
    a) Install trolleys, link & chain falls working from elevating platform. Install at PP 112.5.
    b) Lower elevating platform.
    c) Assemble the supplementary platform on the elevating platform.
    d) Raise the supplementary platform using the chain hoists.
13. TT Denotes square weld with a minimum depth of fusion of 3.5 mm.
14. Verify actual dimensions of equipment supplied by Ingersoll Rand and adjust dimensions as required.

NOTES:

1. All personnel on this platform are to wear full body harness & to be tied off to an approved lifeline anchorage.
2. For details of Supplementary Platform Structure see "Traveler Supplementary Platform -02 to 05" sheets.
3. These sheets detail the Supplementary Platform required for the SAS EB Traveler. Fabricator is to detail the Supplementary Platform for the SAS-WB Traveler similarly except that slope is to be altered to conform to Box Soffit slope on WB.
4. All platform components to be hot dip galvanized.
5. This item will be stored dis-assembled on the Traveler. It will be assembled only when required for use.
6. Provide a durable plastic container for all small loose parts.
7. Design Live Load of this platform is 1.2 kPa (25 psf) plus 200 kg point load. Total Load on platform is not to exceed 1000 kg.
8. Assemble platform with 12.7 Dia galvanized A325 bolts. Wrench tight only.
9. All Trolleys to have drop stops.
10. Trolleys, chain hoist & shackles to be minimum 1.5 ton (13.5 kN) capacity. Trolleys & hoist to be capable of supporting 5.3 kN with a minimum factor of safety of 6.0. Manufacturer is to certify the ultimate load capacity to be 32 kN or greater per unit.
11. Trolleys & components to be stored in a water tight container (supplied by fabricator) when not in use.

ALL DIMENSIONS ARE IN MILLIMETERS UNLESS OTHERWISE SHOWN

CONTRACT CHANGE ORDER NO. ____
SHEET ___ OF ___

REQUESTS FOR INFORMATION NOT ADDRESSED IN THIS CCO REMAIN IN FORCE

R. Valizadeh/V. Toan/Y.L./W.L./F.C.
DESIGN OVERSIGHT
SIGN OFF DATE 07/30/10

MARK	DATE	DESCRIPTIONS	BY	CH'D	CCO#
1	07/30/10	TRAVELER MODIFICATIONS	JO	RM	24SI

REVISIONS

DESIGN	BY J. Otter	CHECKED R. Manzanarez	
DETAILS	BY J. Otter	CHECKED J. Leventini	
QUANTITIES	BY J. Otter	CHECKED J. Leventini	

PREPARED FOR THE STATE OF CALIFORNIA DEPARTMENT OF TRANSPORTATION

R. Manzanarez
PROJECT ENGINEER

BRIDGE NO. 34-0006L/R
KILOMETER POST 13.2/13.9

SAN FRANCISCO OAKLAND BAY BRIDGE
EAST SPAN SEISMIC SAFETY PROJECT
SELF-ANCHORED SUSPENSION BRIDGE
(SUPERSTRUCTURE & TOWER)

TRAVELER SUPPLEMENTARY PLATFORM-01

Rev. Date: 5-18-98

ORIGINAL SCALE IN MILLIMETERS FOR REDUCED PLANS 0 10 20 30 40 50 60 70 80 90 100

CU 04
EA 0120F1

DISREGARD PRINTS BEARING EARLIER REVISION DATES

REVISION DATES (PRELIMINARY STAGE ONLY) 04/15/02 07/01/02 12/19/02

SHEET 723R1 OF

FILE -> I:\bb\04-012001\sas\contract plans and cco\cco\cco#24si\9-update 07-30-10\dgn\aktrv125a.dgn

USERNAME -> dwinrow DATE PLOTTED -> 03 AUG 2010 TIME PLOTTED -> 11:49:14

100 % PS&E