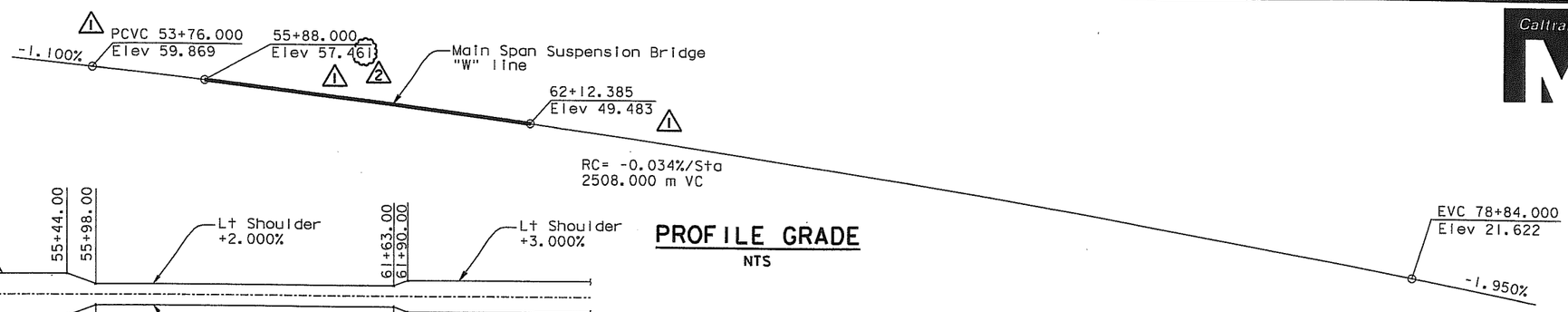

PROFILE GRADE
NTS

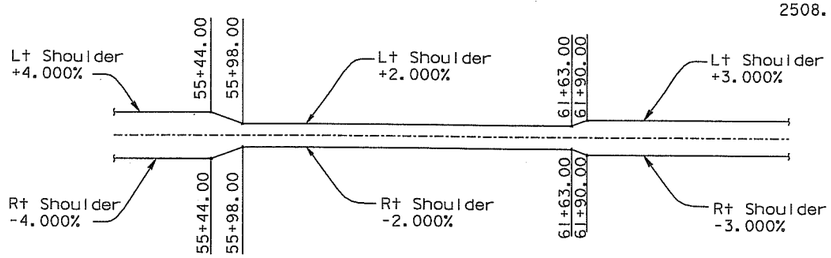

SUPERELEVATION DIAGRAM
NTS

DIST.	COUNTY	ROUTE	KILOMETER POST TOTAL PROJECT	SHEET NO.	TOTAL SHEETS
04	SF	80	13.2/13.9	432R2	1204

REGISTERED ENGINEER - CIVIL

12-6-04
PLANS APPROVAL DATE

Tien Hung Ho
No. C 43990
Exp. 06/30/07
CIVIL
REGISTERED PROFESSIONAL ENGINEER
STATE OF CALIFORNIA

The State of California or its officers or agents shall not be responsible for the accuracy or completeness of electronic copies of this plan sheet.

T.Y. LIN / MOFFATT & NICHOL
825 BATTERY STREET
SAN FRANCISCO, CA 94111

Caltrans now has a web site! To get to the web site, go to: http://www.dot.ca.gov

MARK	DATE	DESCRIPTIONS	BY	CH'D	CCO#
		REVISIONS			
2	02/28/07	W2 CAP BEAM ISD	JD	AS	23
1	07/21/06	W2 CAP BEAM ISD	TH	NV	23

CONTRACT CHANGE ORDER NO. 23
SHEET 2 OF 102

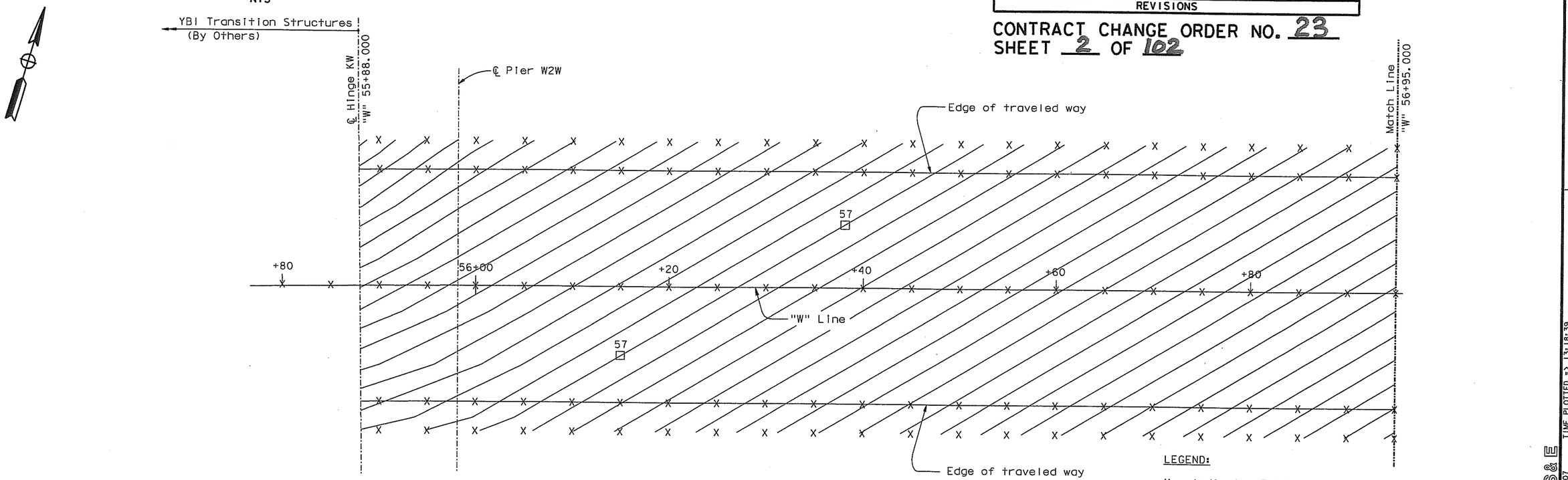

PARTIAL PLAN
1:200

LEGEND:

X - Indicates 5.000 m interval along station line
□ - Indicates even meter contour

NOTES:

1. Contour interval at 0.050 meter.
2. Contours are for top roadway surface.
3. Contours do not include camber.

ALL DIMENSIONS ARE IN METERS UNLESS OTHERWISE SHOWN

R. Valizadeh/V. Toan/Y.L./W.L./F.C.
DESIGN OVERSIGHT
SIGN OFF DATE 02/28/07

Rev. Date: 5-18-98

	BY	CHECKED
DESIGN	T. Ho	M. Nader
DETAILS	V. Ignatovsky	M. Nader
QUANTITIES	D. Harrison	N. Vo

PREPARED FOR THE
STATE OF CALIFORNIA
DEPARTMENT OF TRANSPORTATION

R. Manzanarez
PROJECT ENGINEER

CU 04
EA 0120F1

BRIDGE NO. 34-0006L/R
KILOMETER POST 13.2/13.9

SAN FRANCISCO OAKLAND BAY BRIDGE
EAST SPAN SEISMIC SAFETY PROJECT
SELF-ANCHORED SUSPENSION BRIDGE
(SUPERSTRUCTURE & TOWER)

DECK CONTOURS NO. 1

ORIGINAL SCALE IN MILLIMETERS FOR REDUCED PLANS 0 10 20 30 40 50 60 70 80 90 100

DISREGARD PRINTS BEARING EARLIER REVISION DATES

REVISION DATES (PRELIMINARY STAGE ONLY): 01/30/99 | 05/18/99 | 08/02/99 | 05/31/01 | 04/08/02 | 07/01/02 | 12/18/02 | 05/16/03

SHEET 015R2 OF

FILE => I:\bb\04-012001\sas\contract plans and cco\cco\cco#23\updates\abdkc01.dgn

100% PS&E
DATE PLOTTED => 16 MAR 2007 TIME PLOTTED => 13:18:39
USERNAME => bkwok

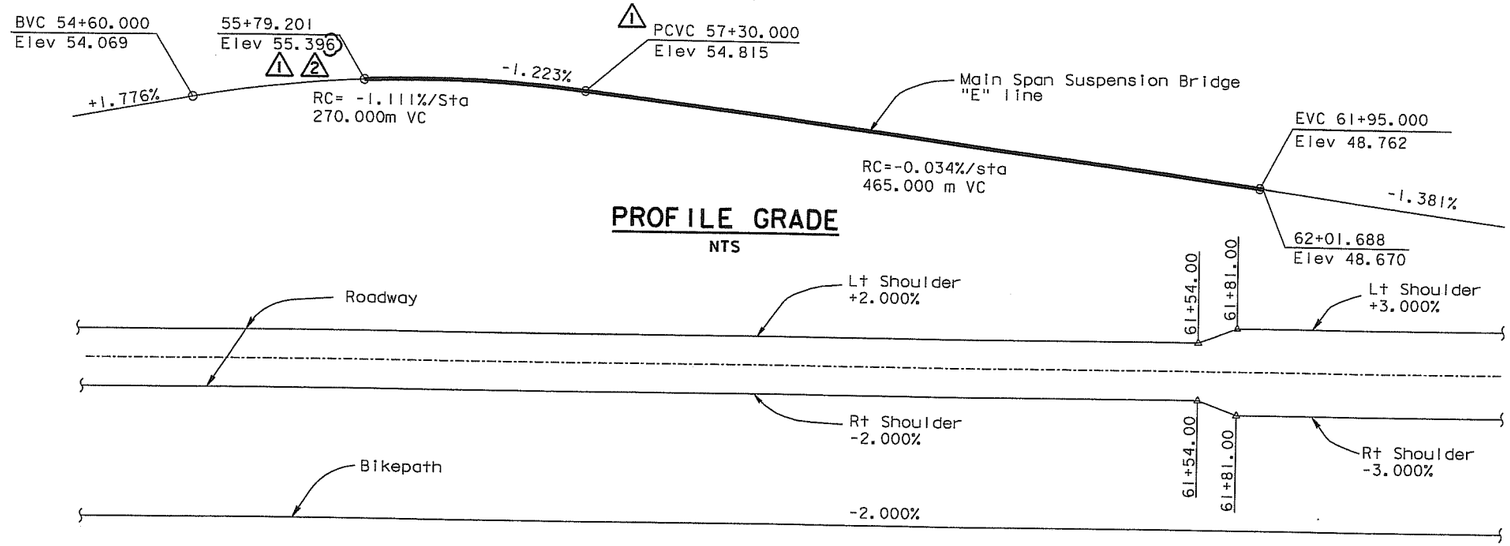

PROFILE GRADE
NTS

SUPERELEVATION DIAGRAM
NTS

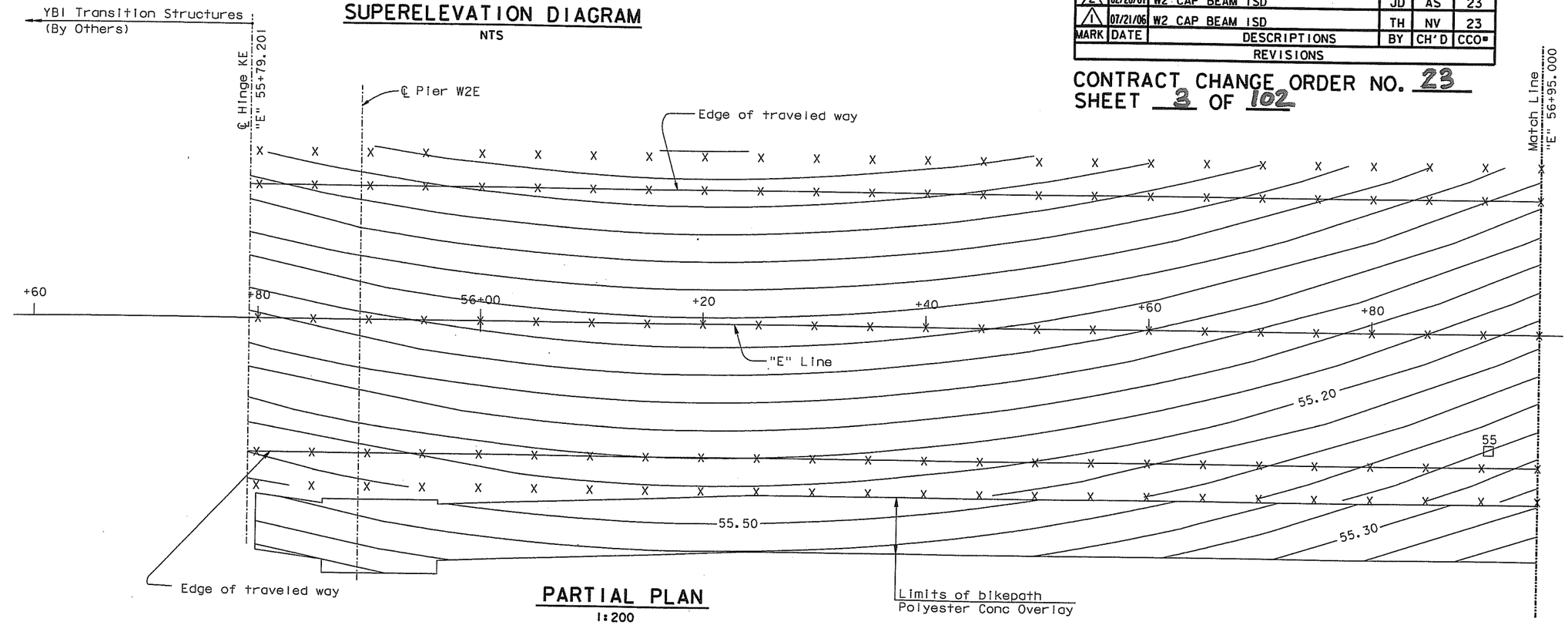

PARTIAL PLAN
1:200

DIST.	COUNTY	ROUTE	KILOMETER POST TOTAL PROJECT	SHEET No.	TOTAL SHEETS
04	SF	80	13.2/13.9	437R2	1204

REGISTERED ENGINEER - CIVIL
Tien Hung Ho
No. C 43990
Exp. 06/30/07
CIVIL
STATE OF CALIFORNIA
12-6-04
PLANS APPROVAL DATE

The State of California or its officers or agents shall not be responsible for the accuracy or completeness of electronic copies of this plan sheet.

T.Y. LIN / MOFFATT & NICHOL
825 BATTERY STREET
SAN FRANCISCO, CA 94111

Caltrans now has a web site! To get to the web site, go to: http://www.dot.ca.gov

LEGEND:

X - Indicates 5.000 m interval along station line
□ - Indicates even meter contour

NOTES:

1. Contour interval at 0.050 meter.
2. Contours are for top roadway surface.
3. Contours do not include camber.

MARK	DATE	DESCRIPTIONS	BY	CH'D	CCO#
2	02/28/07	W2 CAP BEAM ISD	JD	AS	23
1	07/21/06	W2 CAP BEAM ISD	TH	NV	23
		REVISIONS			

CONTRACT CHANGE ORDER NO. 23
SHEET 3 OF 102

R. Valizadeh/V. Toan/Y.L./W.L./F.C.
DESIGN OVERSIGHT
SIGN OFF DATE 02/28/07

Rev. Date: 5-18-98

	BY	CHECKED
DESIGN	T. Ho	M. Nader
DETAILS	V. Ignatovsky	M. Nader
QUANTITIES	D. Harrison	N. Vo

PREPARED FOR THE STATE OF CALIFORNIA
DEPARTMENT OF TRANSPORTATION

R. Manzanarez
PROJECT ENGINEER

ALL DIMENSIONS ARE IN METERS UNLESS OTHERWISE SHOWN

ORIGINAL SCALE IN MILLIMETERS FOR REDUCED PLANS 0 10 20 30 40 50 60 70 80 90 100

CU 04
EA 0120F1

BRIDGE NO. 34-0006L/R
KILOMETER POST 13.2/13.9

DISREGARD PRINTS BEARING EARLIER REVISION DATES

REVISION DATES (PRELIMINARY STAGE ONLY): 01/25/99 | 05/05/99 | 08/02/99 | 05/31/01 | 04/08/02 | 07/01/02 | 12/19/02

SAN FRANCISCO OAKLAND BAY BRIDGE
EAST SPAN SEISMIC SAFETY PROJECT
SELF-ANCHORED SUSPENSION BRIDGE
(SUPERSTRUCTURE & TOWER)

DECK CONTOURS No. 6

SHEET 20R2 OF

FILE => I:\bb\04-012001\sas\contract plans and cco\cco\cco#23\updates\abdkc06.dgn

100% PS&E
DATE PLOTTED => 16 MAR 2007 TIME PLOTTED => 13:16:50
USERNAME => bkwok

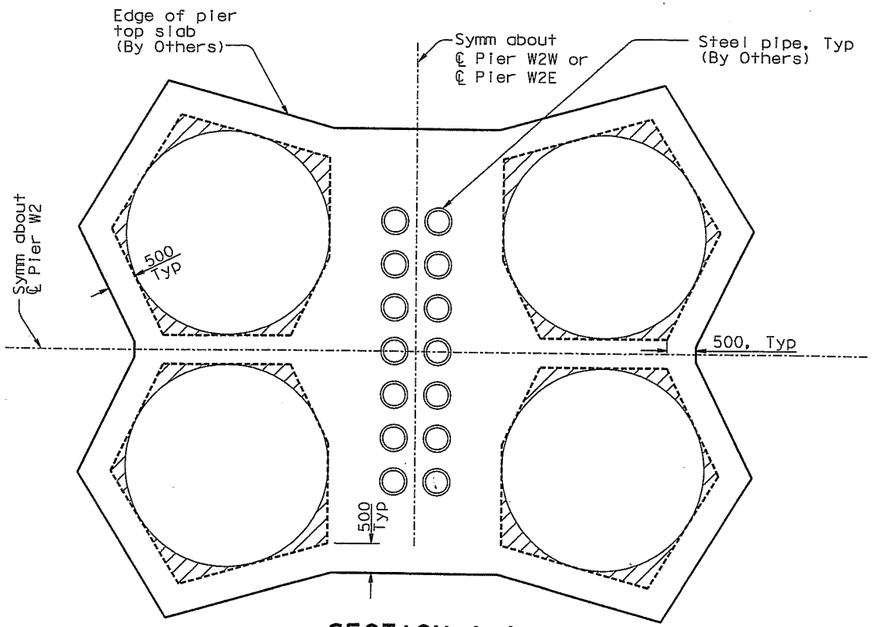

SECTION A-A
1:50

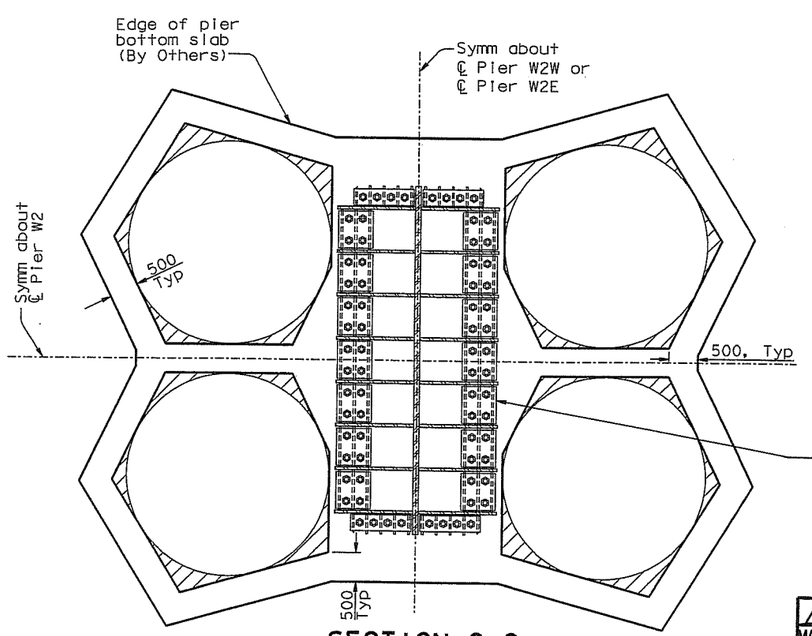

SECTION C-C
1:50

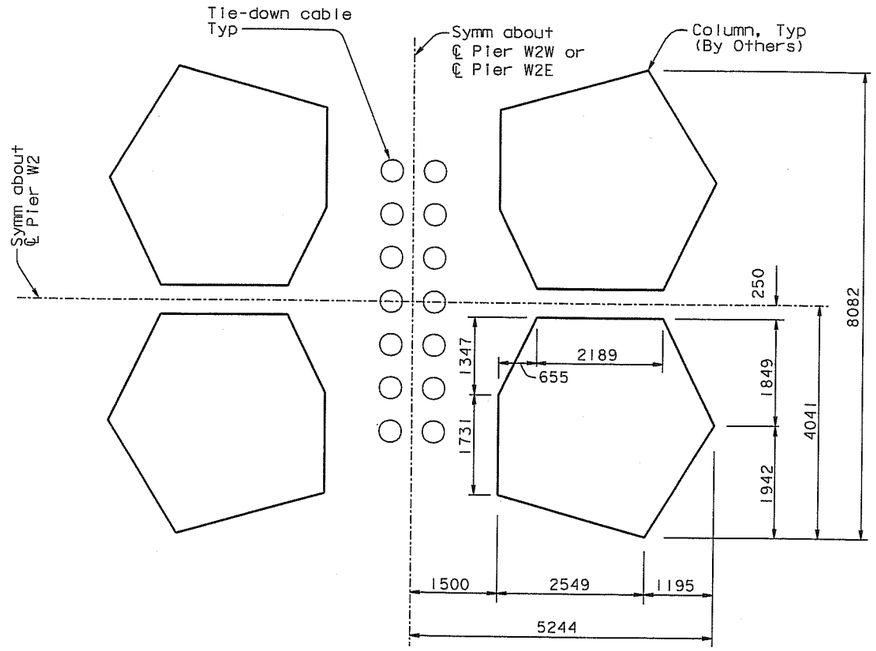

SECTION B-B
1:50

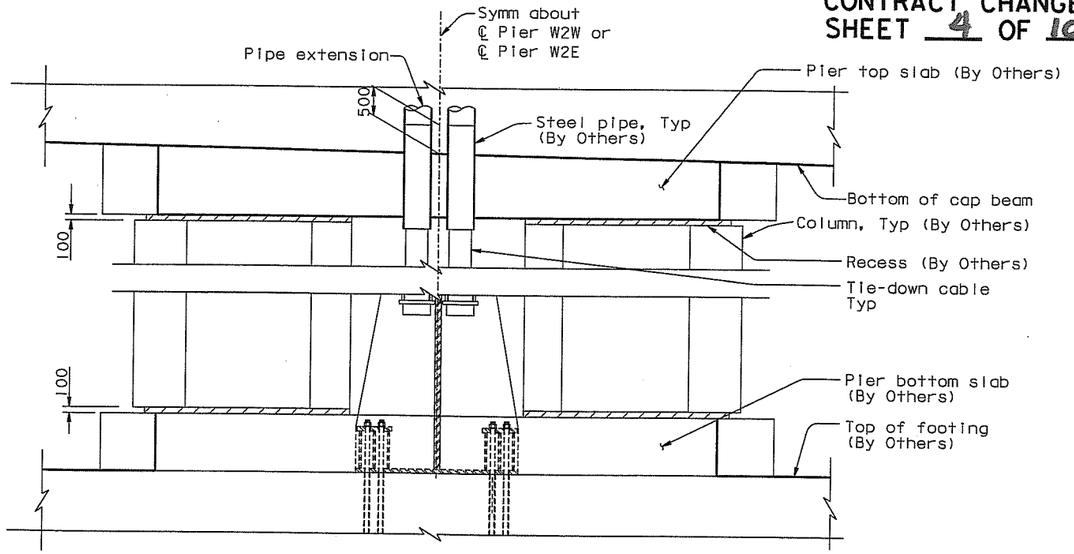

SECTION D-D
1:50

LEGEND:
Indicates 100 recess

NOTES:
1. For cable tie-down, see "Cable Tie-Down Details No.1" through "Cable Tie-Down Details No.4" sheets. ⚠1

FOR REVISIONS ONLY

MARK	DATE	DESCRIPTIONS	BY	CH'D	CCO#
⚠1	07/21/06	W2 CAP BEAM ISD	JD	NV	23

REVISIONS

CONTRACT CHANGE ORDER NO. 23
SHEET 4 OF 102

DIST.	COUNTY	ROUTE	KILOMETER POST TOTAL PROJECT	SHEET NO.	TOTAL SHEETS
04	SF	80	13.2/13.9	450RI	1204

REGISTERED ENGINEER - CIVIL
John Sun, No. C 54648, Exp. 12/31/05, CIVIL, REGISTERED PROFESSIONAL ENGINEER, STATE OF CALIFORNIA
12-6-04
PLANS APPROVAL DATE
The State of California or its officers or agents shall not be responsible for the accuracy or completeness of electronic copies of this plan sheet.

T.Y. LIN / MOFFATT & NICHOL
825 BATTERY STREET
SAN FRANCISCO, CA 94111

Caltrans now has a web site! To get to the web site, go to: http://www.dot.ca.gov

James P. Duxbury, No. C 64677, Exp. 06/30/07, CIVIL, REGISTERED PROFESSIONAL ENGINEER, STATE OF CALIFORNIA

100% PS&E

USERNAME => visitor DATE PLOTTED => 27 MAR 2007 TIME PLOTTED => 15:39:14

R. Valizadeh/V. Toan/Y.L./W.L./F.C.
DESIGN OVERSIGHT
SIGN OFF DATE 07/21/06

	BY	CHECKED
DESIGN	J. Sun	J. Leventini
DETAILS	J. Duxbury	J. Leventini
QUANTITIES	J. Duxbury	S. Shi

PREPARED FOR THE STATE OF CALIFORNIA DEPARTMENT OF TRANSPORTATION

ALL DIMENSIONS ARE IN MILLIMETERS UNLESS OTHERWISE SHOWN

ORIGINAL SCALE IN MILLIMETERS FOR REDUCED PLANS 0 10 20 30 40 50 60 70 80 90 100

R. Manzanarez
PROJECT ENGINEER

CU 04
EA 0120F1

BRIDGE NO. 34-0006L/R
KILOMETER POST 13.2/13.9

SAN FRANCISCO OAKLAND BAY BRIDGE
EAST SPAN SEISMIC SAFETY PROJECT
SELF-ANCHORED SUSPENSION BRIDGE
(SUPERSTRUCTURE & TOWER)

PIER W2 DETAILS NO. 4

DISREGARD PRINTS BEARING EARLIER REVISION DATES →
REVISION DATES (PRELIMINARY STAGE ONLY): 01/27/99 | 05/13/99 | 08/27/99 | 05/31/01 | 01/08/02 | 01/28/02 | 12/19/02

SHEET 33RI OF

FILE => I:\bb\04-0120F1\sas\contract plans and cco\cco\cco#23\aeplr02.dgn

Rev. Date: 5-18-98

DIST.	COUNTY	ROUTE	KILOMETER POST TOTAL PROJECT	SHEET NO.	TOTAL SHEETS
04	SF	80	13.2/13.9	45IR1	1204

REGISTERED ENGINEER - CIVIL

12-6-04
PLANS APPROVAL DATE

The State of California or its officers or agents shall not be responsible for the accuracy or completeness of electronic copies of this plan sheet.

REGISTERED PROFESSIONAL ENGINEER John Sun No. C 54648 Exp. 12/31/05 CIVIL STATE OF CALIFORNIA

T.Y. LIN / MOFFATT & NICHOL
825 BATTERY STREET
SAN FRANCISCO, CA 94111

Caltrans now has a web site! To get to the web site, go to: http://www.dot.ca.gov

Caltrans Metric

MARK	DATE	DESCRIPTIONS	BY	CH'D	CCO#
1	07/21/06	W2 CAP BEAM ISD	JD	NV	23

REVISIONS

CONTRACT CHANGE ORDER NO. 23
SHEET 5 OF 102

REGISTERED PROFESSIONAL ENGINEER James P. Duxbury No. C 64677 Exp. 06/30/07 CIVIL STATE OF CALIFORNIA

FOR REVISIONS ONLY

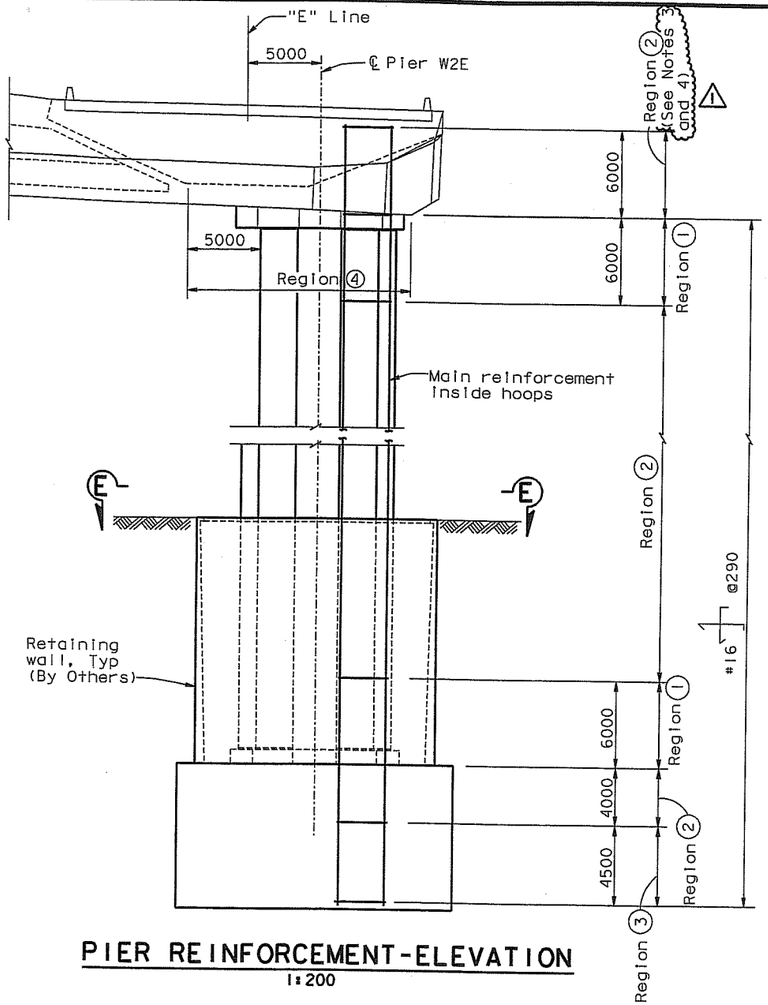

PIER REINFORCEMENT-ELEVATION
1:200

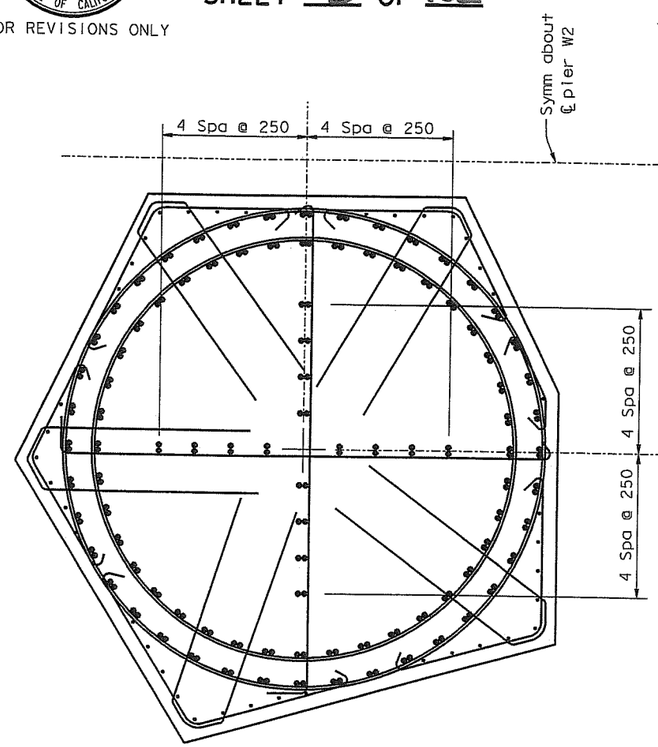

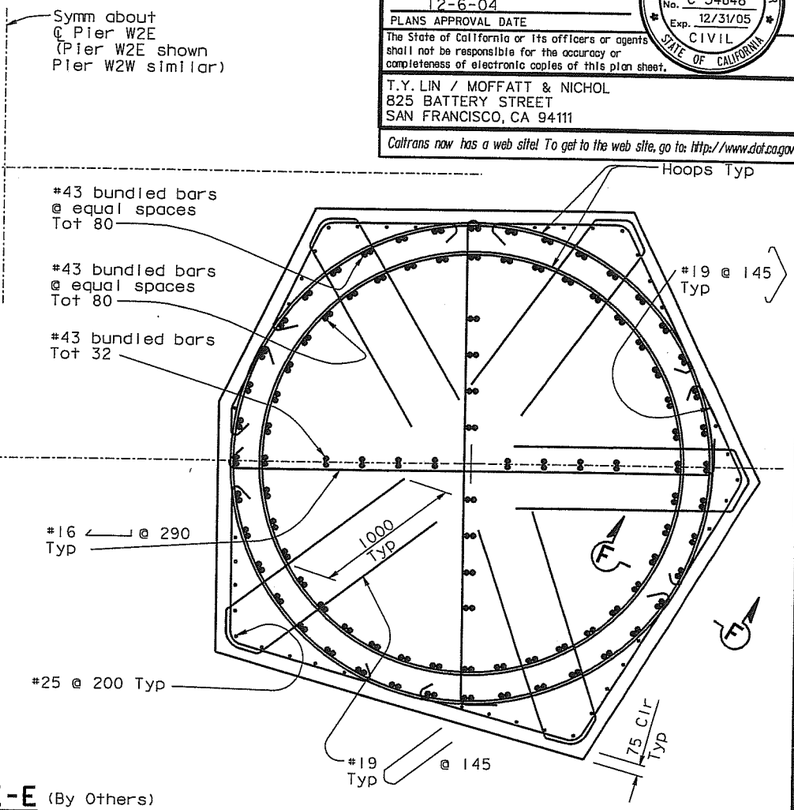

SECTION E-E (By Others)
1:20

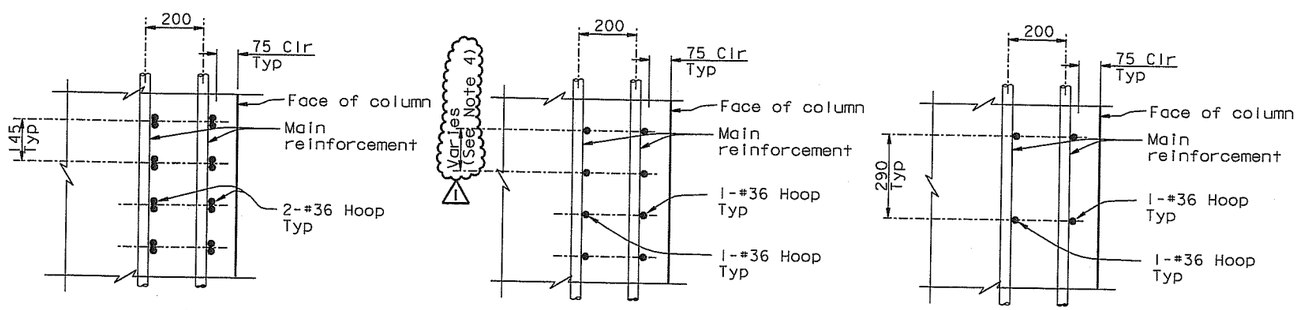

At Region 1 (By Others)

At Region 2 (By Others)

At Region 3 (By Others)

SECTION F-F
1:10

NOTES:

1. Reinforcement is for information only, and by Others.
2. Main reinforcement and hoop reinforcement are "Ultimate" butt splices.
3. Contractor shall remove the corrosion protection from all reinforcing above the pier top slab and shall roughen the existing Pier W2 concrete surface to a minimum of 5 mm amplitude prior to pouring the W2 cap beam concrete.
4. Hoops shall be removed and replaced to facilitate placement of W2 cap beam reinforcement per "W2 Cap Beam Reinforcement Details" sheets.
5. No splices permitted in region 4.

ALL DIMENSIONS ARE IN MILLIMETERS UNLESS OTHERWISE SHOWN

R. Valizadeh/V. Toan/Y.L./W.L./F.C.
DESIGN OVERSIGHT
Roza Valizadeh / Vong Toan / Y. Lin
SIGN OFF DATE 07/21/06
Rev. Date: 5-18-98

	BY	CHECKED
DESIGN	J. Sun	J. Leventini
DETAILS	J. Duxbury	J. Leventini
QUANTITIES	J. Duxbury	S. Shi

PREPARED FOR THE STATE OF CALIFORNIA DEPARTMENT OF TRANSPORTATION

R. Manzanarez
PROJECT ENGINEER

BRIDGE NO. 34-0006L/R
KILOMETER POST 13.2/13.9

SAN FRANCISCO OAKLAND BAY BRIDGE
EAST SPAN SEISMIC SAFETY PROJECT
SELF-ANCHORED SUSPENSION BRIDGE
(SUPERSTRUCTURE & TOWER)

PIER W2 DETAILS NO. 5

ORIGINAL SCALE IN MILLIMETERS FOR REDUCED PLANS 0 10 20 30 40 50 60 70 80 90 100

CU 04
EA 0120F1

DISREGARD PRINTS BEARING EARLIER REVISION DATES

REVISION DATES (PRELIMINARY STAGE ONLY) 05/13/99 08/02/99 05/31/01 04/08/02 07/01/02 12/19/02

SHEET 34R1 OF

FILE => L:\BB\04-012001\SAS\Contract Plans and CCO\CCO\CCO#23\aepir03.dgn

100 % PS&E

USERNAME => vignatovs DATE PLOTTED => 10 MAY 2007 TIME PLOTTED => 08:59:54

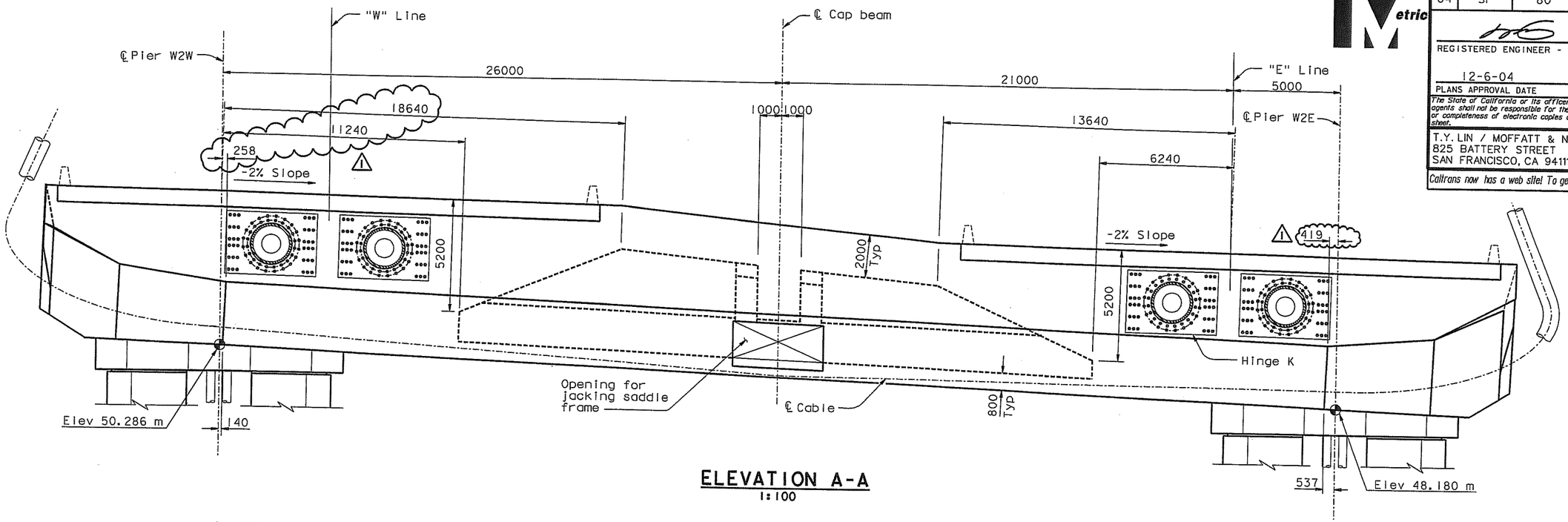

ELEVATION A-A
1:100

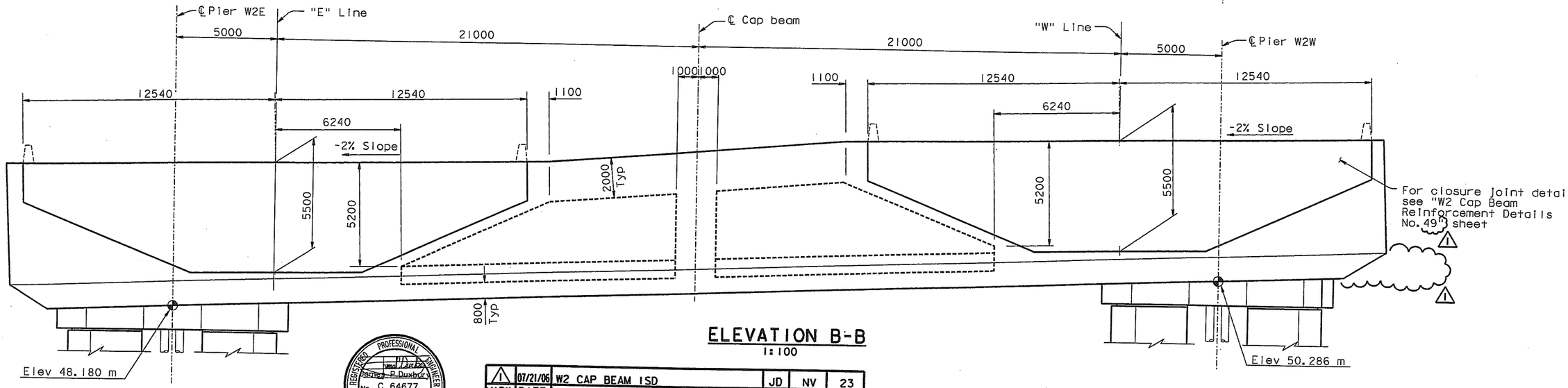

ELEVATION B-B
1:100

MARK	DATE	REVISIONS DESCRIPTIONS	BY	CH'D	CCO#
1	07/21/06	W2 CAP BEAM ISD	JD	NV	23

CONTRACT CHANGE ORDER NO. 23
SHEET 6 OF 102

FOR REVISIONS ONLY

Caltrans Metric

DIST.	COUNTY	ROUTE	KILOMETER POST TOTAL PROJECT	SHEET NO.	TOTAL SHEETS
04	SF	80	13.2/13.9	455R1	1204

REGISTERED ENGINEER - CIVIL
12-6-04
PLANS APPROVAL DATE

REGISTERED PROFESSIONAL ENGINEER — John Sun — No. C 54648 — Exp. 12/31/05 — CIVIL — STATE OF CALIFORNIA

The State of California or its officers or agents shall not be responsible for the accuracy or completeness of electronic copies of this plan sheet.

T.Y. LIN / MOFFATT & NICHOL
825 BATTERY STREET
SAN FRANCISCO, CA 94111

Caltrans now has a web site! To get to the web site, go to: http://www.dot.ca.gov

100% PS&E

USERNAME => visitor DATE PLOTTED => 27 MAR 2007 TIME PLOTTED => 16:04:28

R. Vallzadeh/V. Toan/Y.L./W.L./F.C.
DESIGN OVERSIGHT
SIGN OFF DATE 07/21/06
Rev. Date: 5-18-98

	BY	CHECKED
DESIGN	J. Sun	M. Chen
DETAILS	S. Shi	M. Chen
QUANTITIES	S. Shi	D. Harrison

PREPARED FOR THE STATE OF CALIFORNIA
DEPARTMENT OF TRANSPORTATION

ALL DIMENSIONS ARE IN MILLIMETERS UNLESS OTHERWISE SHOWN

ORIGINAL SCALE IN MILLIMETERS FOR REDUCED PLANS 0 10 20 30 40 50 60 70 80 90 100

R. Manzanarez
PROJECT ENGINEER

CU 04
EA 0120F1

BRIDGE NO. 34-0006L/R
KILOMETER POST 13.2/13.9

DISREGARD PRINTS BEARING EARLIER REVISION DATES →

REVISION DATES (PRELIMINARY STAGE ONLY): 05/15/99 | 08/06/99 | 05/31/01 | 04/08/02 | 07/01/02 | 12/18/02 | 09/06/04

SAN FRANCISCO OAKLAND BAY BRIDGE
EAST SPAN SEISMIC SAFETY PROJECT
SELF-ANCHORED SUSPENSION BRIDGE
(SUPERSTRUCTURE & TOWER)

W2 CAP BEAM DIMENSION DETAILS NO. 2

SHEET 038R1 OF

FILE => I:\bb\04-0120O1\sas\contract plans and cco\cco\cco#23\decap02.dgn

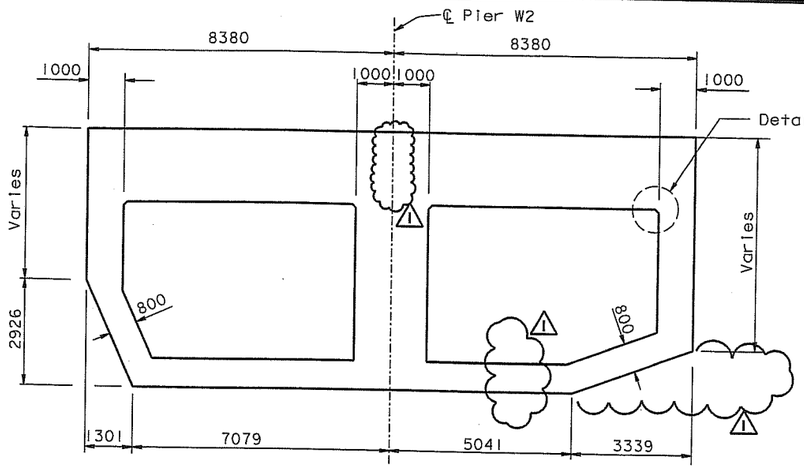

SECTION C-C
1:80

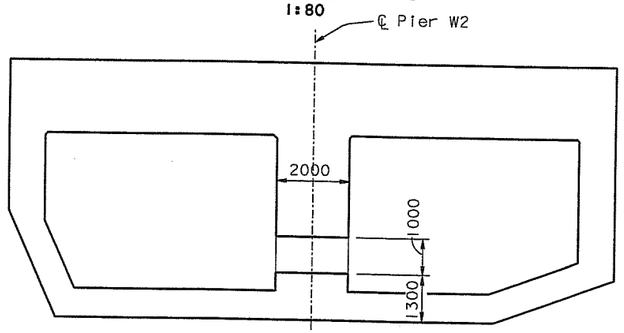

SECTION D-D
1:80

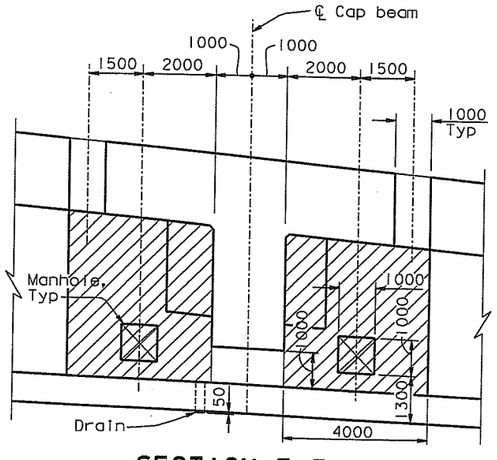

SECTION E-E
1:80

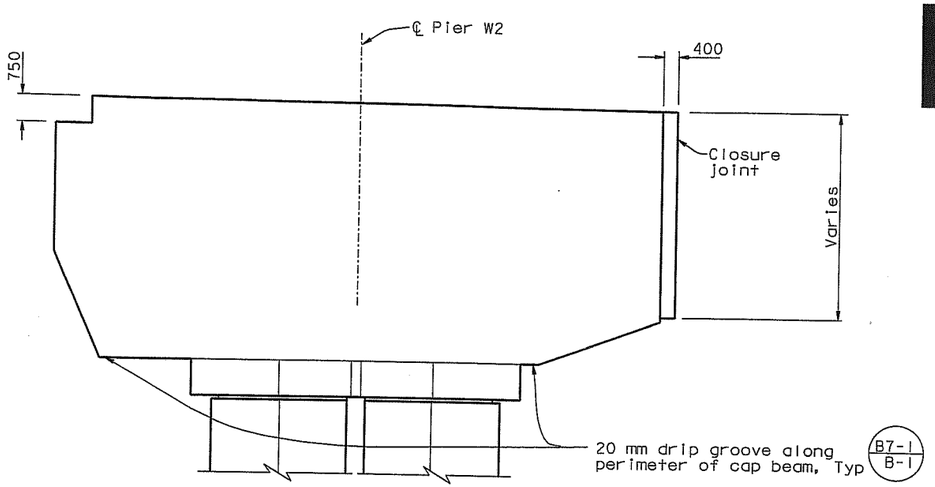

SECTION F-F
1:80

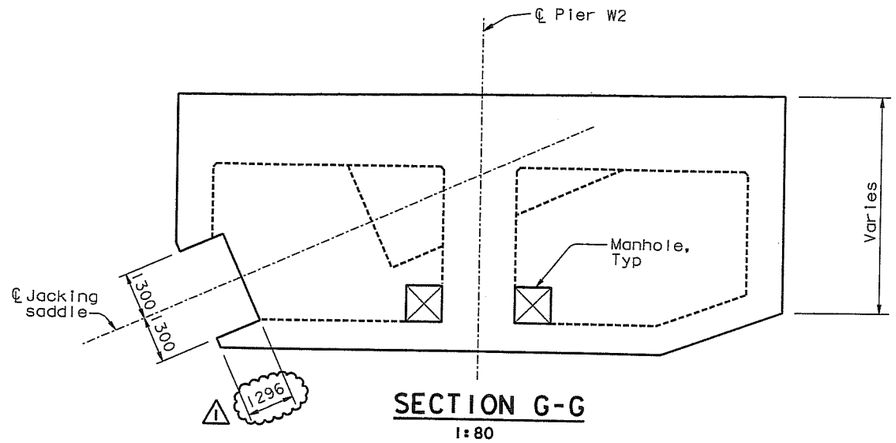

SECTION G-G
1:80

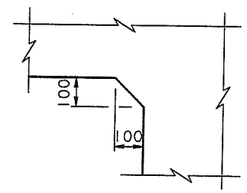

TYPICAL CHAMFER DETAIL

DETAIL C
1:10

DIST.	COUNTY	ROUTE	KILOMETER POST TOTAL PROJECT	SHEET NO.	TOTAL SHEETS
04	SF	80	13.2/13.9	456R1	1204

REGISTERED ENGINEER - CIVIL

12-6-04
PLANS APPROVAL DATE

REGISTERED PROFESSIONAL ENGINEER — John Sun — No. C 54648 — Exp. 12/31/05 — CIVIL — STATE OF CALIFORNIA

The State of California or its officers or agents shall not be responsible for the accuracy or completeness of electronic copies of this plan sheet.

T.Y. LIN / MOFFATT & NICHOL
825 BATTERY STREET
SAN FRANCISCO, CA 94111

Caltrans now has a web site! To get to the web site, go to: http://www.dot.ca.gov

REGISTERED PROFESSIONAL ENGINEER — James P Duskin — No. C 64677 — Exp. 06/30/07 — CIVIL — STATE OF CALIFORNIA

FOR REVISIONS ONLY

MARK	DATE	DESCRIPTIONS	BY	CH'D	CCO#
1	07/21/06	W2 CAP BEAM ISD	JD	NV	23
		REVISIONS			

CONTRACT CHANGE ORDER NO. 23
SHEET 7 OF 102

LEGEND:

All forms to be removed after construction of W2 cap beam deck.

NOTES:

1. For additional details, see "W2 Cap Beam Dimension Details No.1" sheet.

100% PS&E

TIME PLOTTED => 09:09:21
DATE PLOTTED => 10 MAY 2007
USERNAME => vignatovsk

ALL DIMENSIONS ARE IN MILLIMETERS UNLESS OTHERWISE SHOWN

R. Vallizadeh/V. Toan/Y.L./W.L./F.C.
DESIGN OVERSIGHT
SIGN OFF DATE 07/21/06
Rev. Date: 5-18-98

	BY	CHECKED
DESIGN	J. Sun	M. Chen
DETAILS	S. Shi	M. Chen
QUANTITIES	S. Shi	D. Harrison

PREPARED FOR THE STATE OF CALIFORNIA
DEPARTMENT OF TRANSPORTATION

R. Manzanarez
PROJECT ENGINEER

BRIDGE NO. 34-0006L/R
KILOMETER POST 13.2/13.9

CU 04
EA 0120F1

ORIGINAL SCALE IN MILLIMETERS FOR REDUCED PLANS 0 10 20 30 40 50 60 70 80 90 100

DISREGARD PRINTS BEARING EARLIER REVISION DATES →

SAN FRANCISCO OAKLAND BAY BRIDGE
EAST SPAN SEISMIC SAFETY PROJECT
SELF-ANCHORED SUSPENSION BRIDGE
(SUPERSTRUCTURE & TOWER)

W2 CAP BEAM DIMENSION DETAILS NO. 3

REVISION DATES (PRELIMINARY STAGE ONLY)										SHEET	OF
05/15/99	08/27/99	05/31/01	04/09/02	07/31/02	12/19/02					039R1	

FILE => I:\bb\04-012001\sas\contract plans and cco\cco\cco#23\decap03.dgn

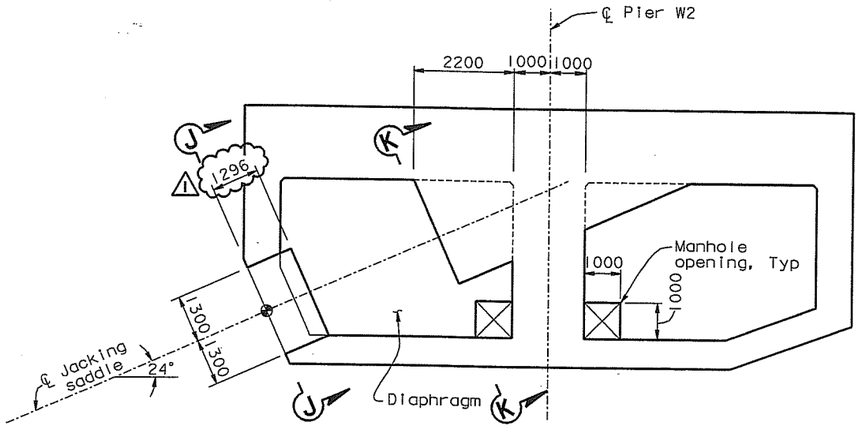

Stage 1

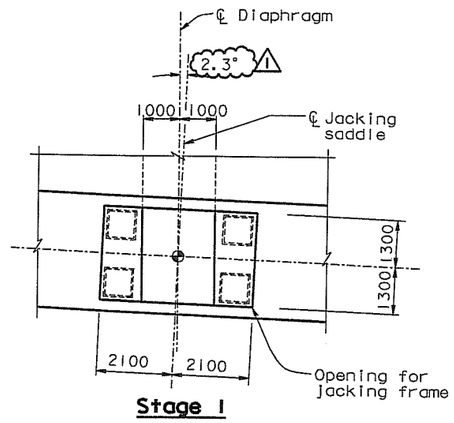

Stage 1

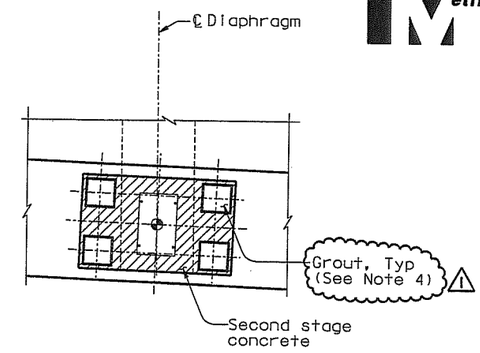

Stage 2

SECTION J-J
1:80

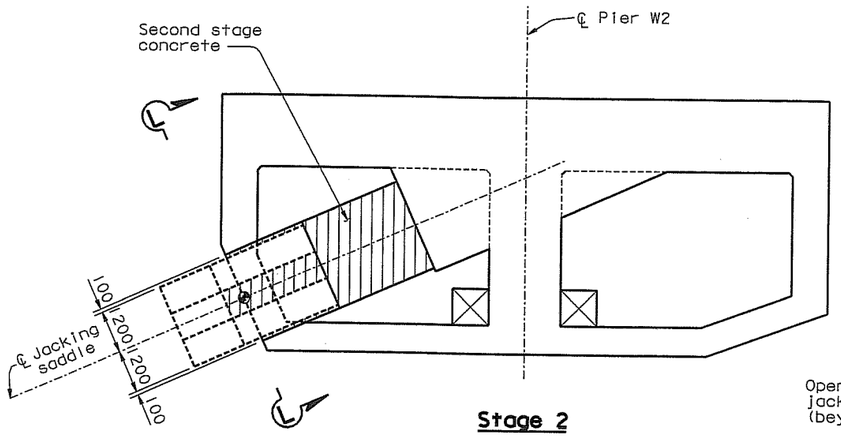

Stage 2

SECTION H-H
1:80

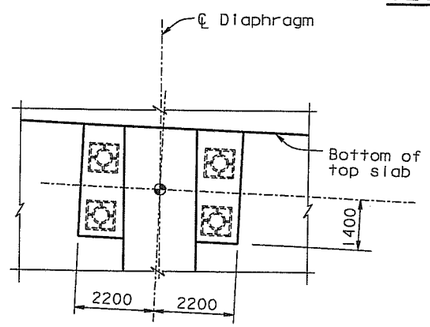

Stage 1

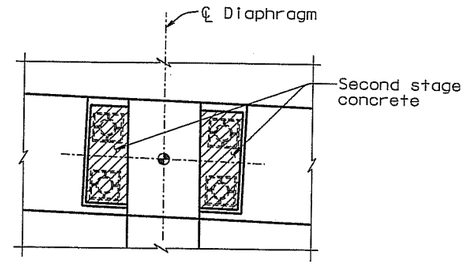

Stage 2

SECTION K-K
1:80

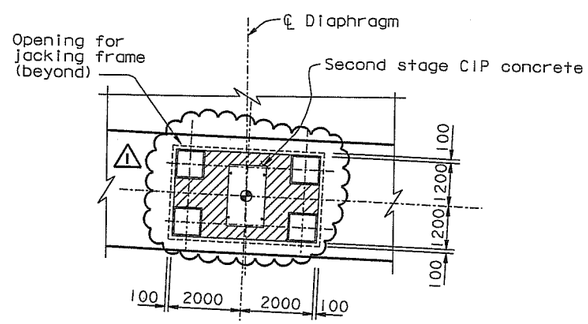

Stage 2

SECTION L-L
1:80

DIST.	COUNTY	ROUTE	KILOMETER POST TOTAL PROJECT	SHEET NO.	TOTAL SHEETS
04	SF	80	13.2/13.9	457R1	1204

Caltrans Metric

REGISTERED ENGINEER - CIVIL

12-6-04
PLANS APPROVAL DATE

The State of California or its officers or agents shall not be responsible for the accuracy or completeness of electronic copies of this plan sheet.

REGISTERED PROFESSIONAL ENGINEER John Sun No. C 54648 Exp. 12/31/05 CIVIL STATE OF CALIFORNIA

T.Y. LIN / MOFFATT & NICHOL
825 BATTERY STREET
SAN FRANCISCO, CA 94111

Caltrans now has a web site! To get to the web site, go to: http://www.dot.ca.gov

REGISTERED PROFESSIONAL ENGINEER James P. Duxbury No. C 64677 Exp. 06/30/07 CIVIL STATE OF CALIFORNIA

FOR REVISIONS ONLY

MARK	DATE	DESCRIPTIONS	BY	CH'D	CCO#
1	07/21/06	W2 CAP BEAM ISD, GROUT LEGS	JD	NV	23

REVISIONS

CONTRACT CHANGE ORDER NO. 23
SHEET 8 OF 102

NOTES:

1. For additional details, see "W2 Cap Beam Dimension Details No. 1" sheet.
2. Jacking saddle and jacking frame not shown for clarity.
3. Stage 1: W2 Cap Beam construction is complete; main cable jacking has not started.

   Stage 2: Main cable jacking is complete and Stage 2 concrete poured.
4. After all jacking operations have been completed and before the Stage 2 concrete is poured, the Jacking Frame support legs shall be filled with high strength nonshrink grout (f'c=60 MPa). Grouting details shall be submitted to the Engineer for review and approval.

100 % PS&E

ALL DIMENSIONS ARE IN MILLIMETERS UNLESS OTHERWISE SHOWN

R. Valizadeh/V. Toan/Y.L./W.L./F.C.
DESIGN OVERSIGHT
SIGN OFF DATE 07/21/06
Rev. Date: 5-18-98

	BY	CHECKED
DESIGN	J. Sun	M. Chen
DETAILS	S. Shi	M. Chen
QUANTITIES	S. Shi	D. Harrison

PREPARED FOR THE STATE OF CALIFORNIA DEPARTMENT OF TRANSPORTATION

R. Manzanarez
PROJECT ENGINEER

BRIDGE NO. 34-0006L/R
KILOMETER POST 13.2/13.9

SAN FRANCISCO OAKLAND BAY BRIDGE
EAST SPAN SEISMIC SAFETY PROJECT
SELF-ANCHORED SUSPENSION BRIDGE
(SUPERSTRUCTURE & TOWER)

W2 CAP BEAM DIMENSION DETAILS NO. 4

ORIGINAL SCALE IN MILLIMETERS FOR REDUCED PLANS 0 10 20 30 40 50 60 70 80 90 100

CU 04
EA 0120F1

DISREGARD PRINTS BEARING EARLIER REVISION DATES

REVISION DATES (PRELIMINARY STAGE ONLY) 05/31/01 04/08/02 07/01/02 12/19/02

SHEET 040R1 OF

FILE => I:\bb\04-01200I\sas\contract plans and cco\cco\cco#23\aecap03a.dgn

USERNAME => vignatovs DATE PLOTTED => 10 MAY 2007 TIME PLOTTED => 09:11:16

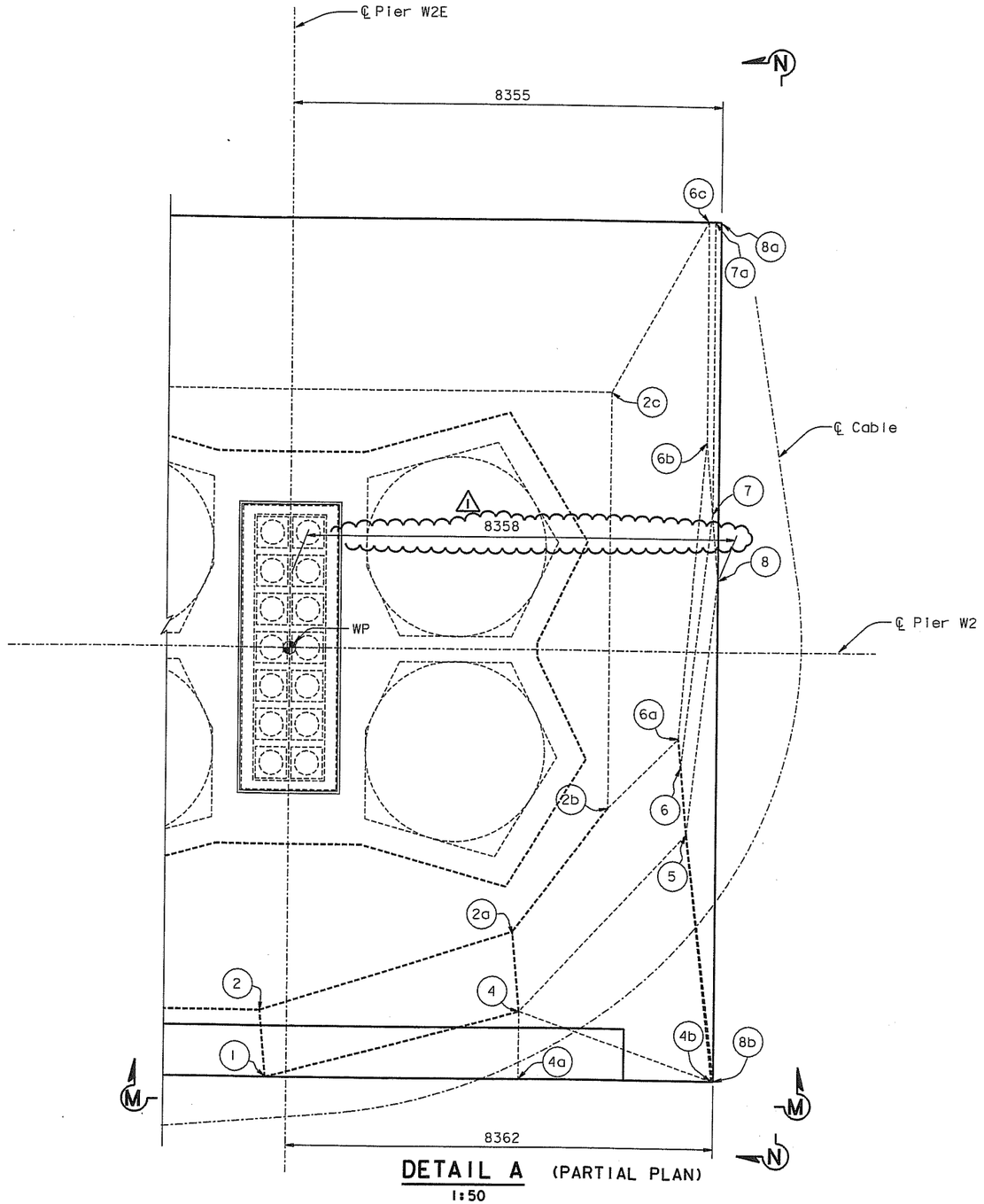

DETAIL A (PARTIAL PLAN)

1:50

DIST.	COUNTY	ROUTE	KILOMETER POST TOTAL PROJECT	SHEET NO.	TOTAL SHEETS
04	SF	80	13.2/13.9	458R1	1204

REGISTERED ENGINEER - CIVIL

12-6-04
PLANS APPROVAL DATE

The State of California or its officers or agents shall not be responsible for the accuracy or completeness of electronic copies of this plan sheet.

REGISTERED PROFESSIONAL ENGINEER — John Sun — No. C 54648 — Exp. 12/31/05 — CIVIL — STATE OF CALIFORNIA

T.Y. LIN / MOFFATT & NICHOL
825 BATTERY STREET
SAN FRANCISCO, CA 94111

Caltrans now has a web site! To get to the web site, go to: http://www.dot.ca.gov

REGISTERED PROFESSIONAL ENGINEER — James P. Duxbury — No. C 64677 — Exp. 06/30/07 — CIVIL — STATE OF CALIFORNIA

FOR REVISIONS ONLY

MARK	DATE	REVISIONS / DESCRIPTIONS	BY	CH'D	CCO#
1	07/21/06	W2 CAP BEAM ISD	JD	NV	23

CONTRACT CHANGE ORDER NO. 23
SHEET 9 OF 102

LEGEND:

(-) Indicates Cap Beam Dimension Control Point

NOTES:

1. For additional details, see "W2 Cap Beam Dimension Details No.1" sheet.
2. For Sections M-M and N-N, see "W2 Cap Beam Dimension Details No.6" sheet.

100 % PS&E

USERNAME => visitor DATE PLOTTED => 27 MAR 2007 TIME PLOTTED => 16:07:03

ALL DIMENSIONS ARE IN MILLIMETERS UNLESS OTHERWISE SHOWN

R. Vallzadeh/V. Toan/Y. L./W. L./F. C.
DESIGN OVERSIGHT
SIGN OFF DATE 07/21/06

Rev. Date: 5-18-98

	BY	CHECKED
DESIGN	J. Sun	M. Chen
DETAILS	S. Shi	M. Chen
QUANTITIES	S. Shi	D. Harrison

ORIGINAL SCALE IN MILLIMETERS FOR REDUCED PLANS 0 10 20 30 40 50 60 70 80 90 100

PREPARED FOR THE STATE OF CALIFORNIA DEPARTMENT OF TRANSPORTATION

R. Manzanarez
PROJECT ENGINEER

CU 04
EA 0120F1

BRIDGE NO. 34-0006L/R
KILOMETER POST 13.2/13.9

DISREGARD PRINTS BEARING EARLIER REVISION DATES →

FILE => I:\bb\04-0120F1\sas\contract plans and cco\cco\cco#23\decap04.dgn

SAN FRANCISCO OAKLAND BAY BRIDGE
EAST SPAN SEISMIC SAFETY PROJECT
SELF-ANCHORED SUSPENSION BRIDGE
(SUPERSTRUCTURE & TOWER)

W2 CAP BEAM DIMENSION DETAILS NO. 5

REVISION DATES (PRELIMINARY STAGE ONLY)									SHEET	OF
05/25/99	08/09/99	05/31/01	01/09/02	07/09/02	12/19/02				041R1	

Caltrans now has a web site! To get to the web site, go to: http://www.dot.ca.gov

DIST.	COUNTY	ROUTE	KILOMETER POST TOTAL PROJECT	SHEET NO.	TOTAL SHEETS
04	SF	80	13.2/13.9	459R1	1204

Caltrans Metric

REGISTERED ENGINEER - CIVIL

12-6-04
PLANS APPROVAL DATE

REGISTERED PROFESSIONAL ENGINEER — John Sun — No. C 54648 — Exp. 12/31/05 — CIVIL — STATE OF CALIFORNIA

The State of California or its officers or agents shall not be responsible for the accuracy or completeness of electronic copies of this plan sheet.

T.Y. LIN / MOFFATT & NICHOL
825 BATTERY STREET
SAN FRANCISCO, CA 94111

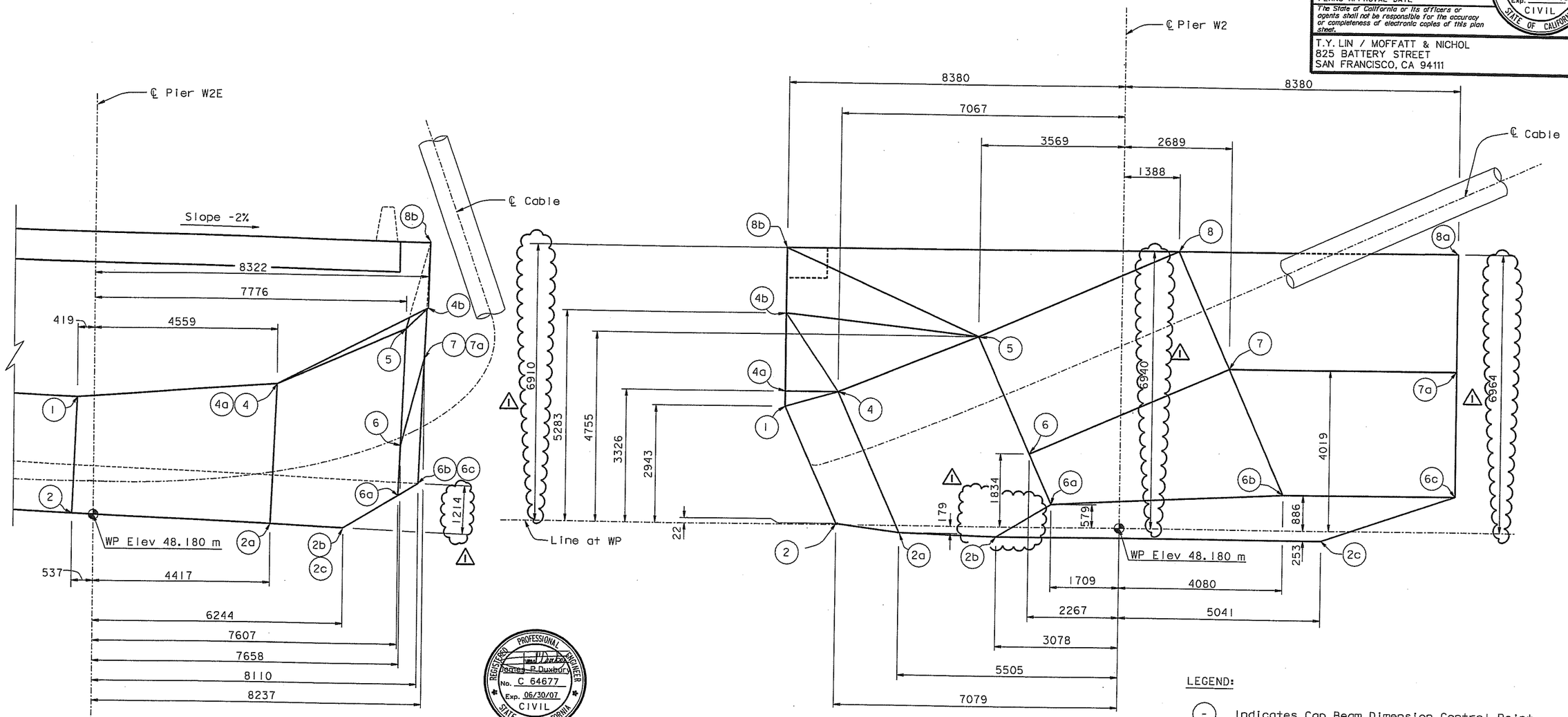

SECTION M-M
1:50

SECTION N-N
1:50

LEGEND:

(-) Indicates Cap Beam Dimension Control Point

FOR REVISIONS ONLY

MARK	DATE	DESCRIPTIONS	BY	CH'D	CCO#
		REVISIONS			
1	07/21/06	W2 CAP BEAM ISD	JD	NV	23

CONTRACT CHANGE ORDER NO. 23
SHEET 10 OF 102

REGISTERED PROFESSIONAL ENGINEER — James P. Duxbury — No. C 64677 — Exp. 06/30/07 — CIVIL — STATE OF CALIFORNIA

R. Valizadeh/V. Toan/Y.L./W.L./F.C.
DESIGN OVERSIGHT
SIGN OFF DATE 07/21/06

Rev. Date: 5-18-98

	BY	CHECKED
DESIGN	J. Sun	M. Chen
DETAILS	S. Shi	M. Chen
QUANTITIES	S. Shi	D. Harrison

PREPARED FOR THE STATE OF CALIFORNIA
DEPARTMENT OF TRANSPORTATION

R. Manzanarez
PROJECT ENGINEER

CU 04
EA 0120F1

ALL DIMENSIONS ARE IN MILLIMETERS UNLESS OTHERWISE SHOWN

ORIGINAL SCALE IN MILLIMETERS FOR REDUCED PLANS 0 10 20 30 40 50 60 70 80 90 100

BRIDGE NO. 34-0006L/R
KILOMETER POST 13.2/13.9

DISREGARD PRINTS BEARING EARLIER REVISION DATES →

SAN FRANCISCO OAKLAND BAY BRIDGE
EAST SPAN SEISMIC SAFETY PROJECT
SELF-ANCHORED SUSPENSION BRIDGE
(SUPERSTRUCTURE & TOWER)

W2 CAP BEAM DIMENSION DETAILS NO. 6

REVISION DATES (PRELIMINARY STAGE ONLY)								SHEET	OF
05/15/98	08/28/98	05/31/01	04/08/02	07/29/02	12/19/02			042R1	

FILE => I:\bb\04-012001\sas\contract plans and cco\cco\cco#23\aecap05.dgn

100% PS&E

TIME PLOTTED => 16:07:33
DATE PLOTTED => 27 MAR 2007
USERNAME => visitor

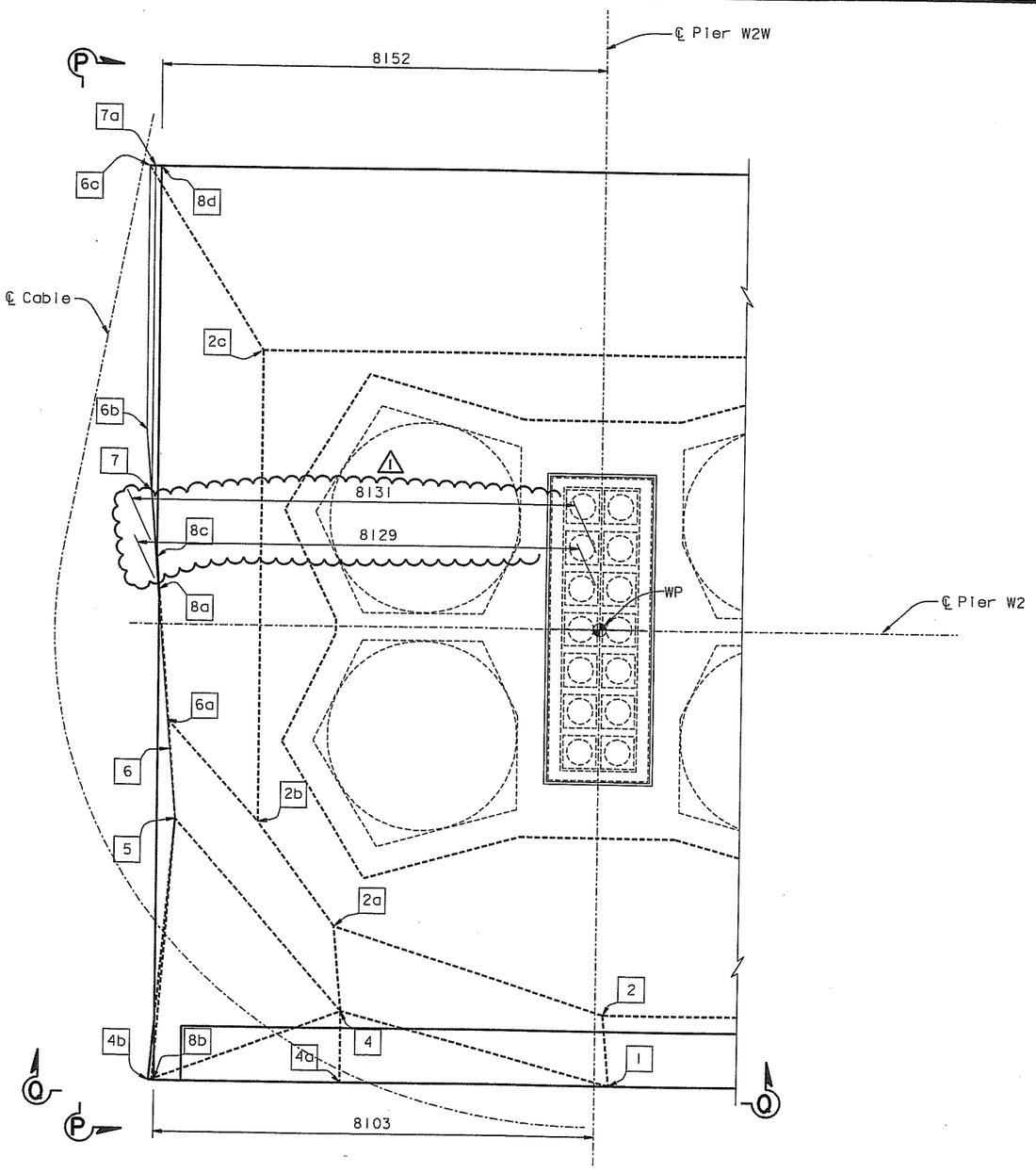

DETAIL B (PARTIAL PLAN)

1:50

DIST.	COUNTY	ROUTE	KILOMETER POST TOTAL PROJECT	SHEET NO.	TOTAL SHEETS
04	SF	80	13.2/13.9	460R1	1204

Caltrans Metric

REGISTERED ENGINEER - CIVIL

12-6-04

PLANS APPROVAL DATE

The State of California or its officers or agents shall not be responsible for the accuracy or completeness of electronic copies of this plan sheet.

REGISTERED PROFESSIONAL ENGINEER John Sun No. C 54648 Exp. 12/31/05 CIVIL STATE OF CALIFORNIA

T.Y. LIN / MOFFATT & NICHOL
825 BATTERY STREET
SAN FRANCISCO, CA 94111

Caltrans now has a web site! To get to the web site, go to: http://www.dot.ca.gov

REGISTERED PROFESSIONAL ENGINEER James P. Duxbury No. C 64677 Exp. 06/30/07 CIVIL STATE OF CALIFORNIA

FOR REVISIONS ONLY

MARK	DATE	DESCRIPTIONS	BY	CH'D	CCO#
1	07/21/06	W2 CAP BEAM ISD	JD	NV	23

REVISIONS

CONTRACT CHANGE ORDER NO. 23
SHEET 11 OF 102

LEGEND:

[-] Indicates Cap Beam Dimensions Control Point

NOTES:

1. For additional details, see "W2 Cap Beam Dimension Details No. 1" sheet.
2. For Sections P-P and Q-Q, see "W2 Cap Beam Dimension Details No. 8" sheet.

100 % PS&E

USERNAME => visitor DATE PLOTTED => 27 MAR 2007 TIME PLOTTED => 16:11:33

ALL DIMENSIONS ARE IN MILLIMETERS UNLESS OTHERWISE SHOWN

R. Valizadeh/V. Toan/Y.L./W.L./F.C.
DESIGN OVERSIGHT
Roger Valizadeh / Vong Toan / Y Lu
SIGN OFF DATE 07/21/06
Rev. Date: 5-18-98

	BY	CHECKED
DESIGN	J. Sun	M. Chen
DETAILS	S. Shi	M. Chen
QUANTITIES	S. Shi	D. Harrison

PREPARED FOR THE STATE OF CALIFORNIA DEPARTMENT OF TRANSPORTATION

R. Manzanarez
PROJECT ENGINEER

BRIDGE NO. 34-0006L/R
KILOMETER POST 13.2/13.9

SAN FRANCISCO OAKLAND BAY BRIDGE
EAST SPAN SEISMIC SAFETY PROJECT
SELF-ANCHORED SUSPENSION BRIDGE
(SUPERSTRUCTURE & TOWER)

W2 CAP BEAM DIMENSION DETAILS NO. 7

ORIGINAL SCALE IN MILLIMETERS FOR REDUCED PLANS 0 10 20 30 40 50 60 70 80 90 100

CU 04
EA 0120F1

DISREGARD PRINTS BEARING EARLIER REVISION DATES

REVISION DATES (PRELIMINARY STAGE ONLY) 05/13/99 08/02/99 05/31/01 04/02/02 07/01/02 12/19/02

SHEET 043R1 OF

FILE => I:\bb\04-012001\sas\contract plans and cco\cco\cco#23\aecap06.dgn

DIST.	COUNTY	ROUTE	KILOMETER POST TOTAL PROJECT	SHEET NO.	TOTAL SHEETS
04	SF	80	13.2/13.9	461R1	1204

Caltrans Metric

REGISTERED ENGINEER - CIVIL

12-6-04
PLANS APPROVAL DATE

REGISTERED PROFESSIONAL ENGINEER John Sun No. C 54648 Exp. 12/31/05 CIVIL STATE OF CALIFORNIA

The State of California or its officers or agents shall not be responsible for the accuracy or completeness of electronic copies of this plan sheet.

T.Y. LIN / MOFFATT & NICHOL
825 BATTERY STREET
SAN FRANCISCO, CA 94111

Caltrans now has a web site! To get to the web site, go to: http://www.dot.ca.gov

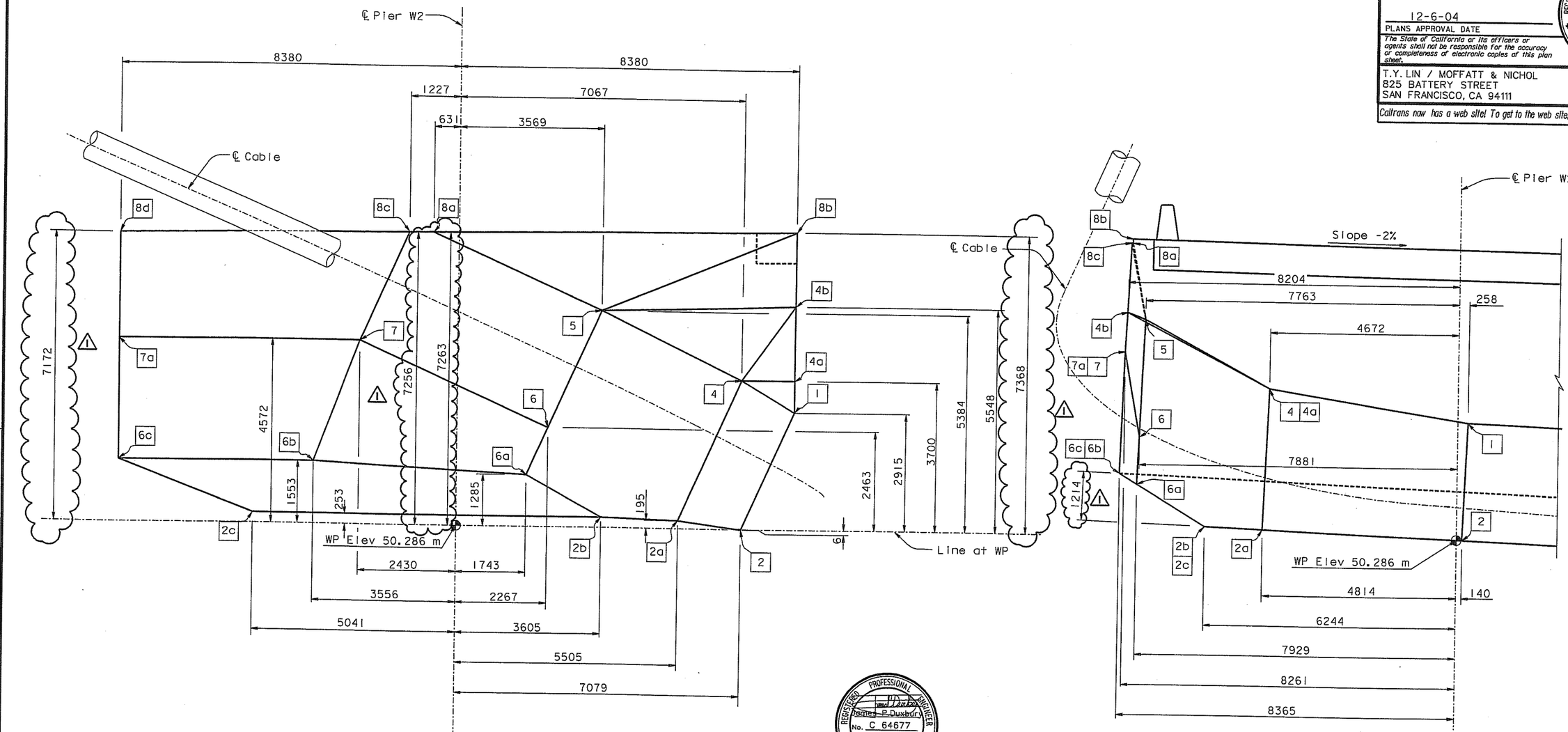

SECTION P-P
1:50

SECTION Q-Q
1:50

REGISTERED PROFESSIONAL ENGINEER James P. Duxbury No. C 64677 Exp. 06/30/07 CIVIL STATE OF CALIFORNIA

FOR REVISIONS ONLY

MARK	DATE	DESCRIPTIONS	BY	CH'D	CCO#
1	07/21/06	W2 CAP BEAM ISD	JD	NV	23

REVISIONS

CONTRACT CHANGE ORDER NO. 23
SHEET 12 OF 102

LEGEND:

[-] Indicates Cap Beam Dimensions Control Point

ALL DIMENSIONS ARE IN MILLIMETERS UNLESS OTHERWISE SHOWN

R. Valizadeh/V. Toan/Y.L./W.L./F.C.
DESIGN OVERSIGHT
Roger Valizadeh / Vong Toan / Y. Lu
SIGN OFF DATE 07/21/06
Rev. Date: 5-18-98

	BY	CHECKED
DESIGN	J. Sun	M. Chen
DETAILS	S. Shi	M. Chen
QUANTITIES	S. Shi	D. Harrison

PREPARED FOR THE STATE OF CALIFORNIA DEPARTMENT OF TRANSPORTATION

R. Manzanarez
PROJECT ENGINEER

BRIDGE NO. 34-0006L/R
KILOMETER POST 13.2/13.9

SAN FRANCISCO OAKLAND BAY BRIDGE
EAST SPAN SEISMIC SAFETY PROJECT
SELF-ANCHORED SUSPENSION BRIDGE
(SUPERSTRUCTURE & TOWER)

W2 CAP BEAM DIMENSION DETAILS NO. 8

ORIGINAL SCALE IN MILLIMETERS FOR REDUCED PLANS 0 10 20 30 40 50 60 70 80 90 100

CU 04
EA 0120F1

DISREGARD PRINTS BEARING EARLIER REVISION DATES

REVISION DATES (PRELIMINARY STAGE ONLY) 05/15/99 08/02/99 05/31/01 04/08/02 07/01/02 12/19/02

SHEET 044R1 OF

FILE => I:\bb\04-012001\sas\contract plans and cco\cco\cco=23\aecap07.dgn

100 % PS&E

USERNAME => visitor DATE PLOTTED => 27 MAR 2007 TIME PLOTTED => 16:12:14

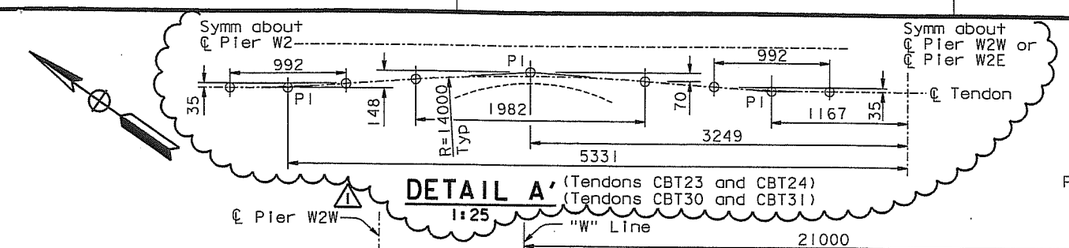

DETAIL A' (Tendons CBT23 and CBT24) (Tendons CBT30 and CBT31)
1:25

REGISTERED PROFESSIONAL ENGINEER
James P. Duxbury
No. C 64677
Exp. 06/30/07
CIVIL
STATE OF CALIFORNIA

FOR REVISIONS ONLY

Caltrans now has a web site! To get to the web site, go to: http://www.dot.ca.gov

MARK	DATE	DESCRIPTIONS	BY	CH'D	CCO#
1	07/21/06	W2 CAP BEAM ISD	JD	NV	23

REVISIONS

CONTRACT CHANGE ORDER NO. 23
SHEET 13 OF 102

DIST.	COUNTY	ROUTE	KILOMETER POST TOTAL PROJECT	SHEET NO.	TOTAL SHEETS
04	SF	80	13.2/13.9	462R1	1204

REGISTERED ENGINEER - CIVIL

12-6-04
PLANS APPROVAL DATE

The State of California or its officers or agents shall not be responsible for the accuracy or completeness of electronic copies of this plan sheet.

REGISTERED PROFESSIONAL ENGINEER
John Sun
No. C 54648
Exp. 12/31/05
CIVIL
STATE OF CALIFORNIA

T.Y. LIN / MOFFATT & NICHOL
825 BATTERY STREET
SAN FRANCISCO, CA 94111

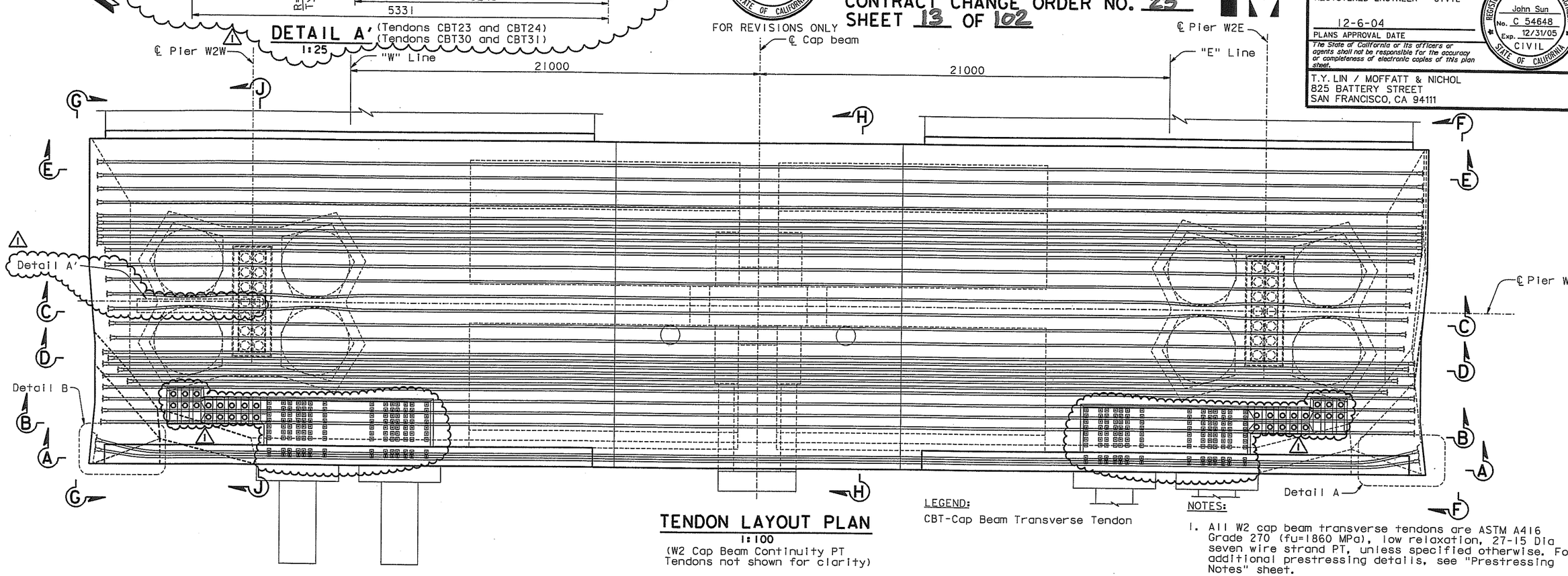

TENDON LAYOUT PLAN
1:100
(W2 Cap Beam Continuity PT
Tendons not shown for clarity)

LEGEND:
CBT-Cap Beam Transverse Tendon

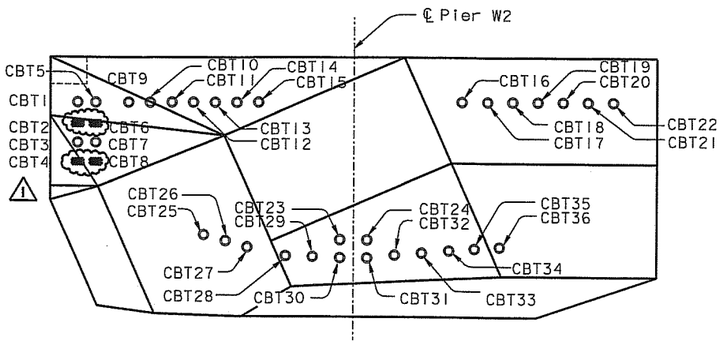

TENDON DESIGNATION
1:80

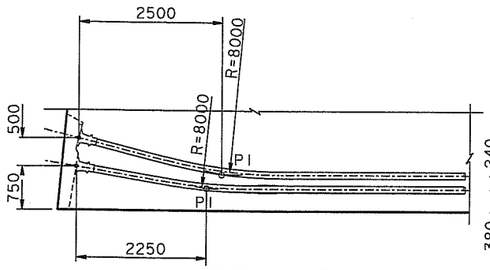

DETAIL B
1:50
(Tendons CBT1 and CBT5)
(Tendons CBT2 thru CBT8 similar)

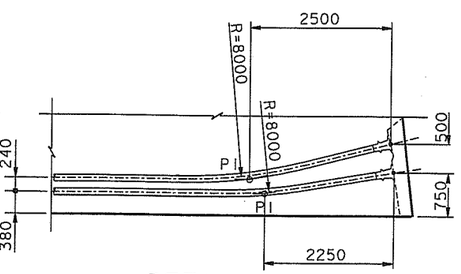

DETAIL A
1:50
(Tendons CBT1 and CBT5)
(Tendons CBT2 thru CBT8 similar)

NOTES:

1. All W2 cap beam transverse tendons are ASTM A416 Grade 270 (fu=1860 MPa), low relaxation, 27-15 Dia seven wire strand PT, unless specified otherwise. For additional prestressing details, see "Prestressing Notes" sheet.
2. For Section A-A, see "W2 Cap Beam Post-Tensioning Details No.2" sheet.
3. For Sections B-B through E-E, see "W2 Cap Beam Post-Tensioning Details No.3" sheet.
4. For Sections F-F through J-J, see "W2 Cap Beam Post-Tensioning Details No.4" sheet.
5. For bikepath details near cap beam, see "Bikepath Details" sheets.
6. For PT blockout dimensions, see "W2 Cap Beam Blockout Details" sheets.
7. Jacking force in the W2 cap beam transverse tendons (CBT1-CBT36) shall be 5265 kN typical.
8. For general stressing sequence, see "Pier W2 Construction Sequence" sheet.
9. For "W2 Cap Beam Post-Tensioning Details" sheets, the Contractor shall verify all controlling field dimensions before ordering or fabricating any material.
10. W2 cap beam elevations are to top of finished concrete and do not include overlay thickness.

ALL DIMENSIONS ARE IN MILLIMETERS UNLESS OTHERWISE SHOWN

100 % PS&E

TIME PLOTTED => 09:14:17
DATE PLOTTED => 10 MAY 2007
USERNAME => vignatovs

R. Vaiizadeh/V. Toan/Y.L./W.L./F.C.		DESIGN	BY J. Sun	CHECKED M. Chen	PREPARED FOR THE STATE OF CALIFORNIA DEPARTMENT OF TRANSPORTATION
DESIGN OVERSIGHT		DETAILS	BY J. Duxbury	CHECKED M. Chen	
SIGN OFF DATE 07/21/06		QUANTITIES	BY S. Shi	CHECKED D. Harrison	

Rev. Date: 5-18-98

ORIGINAL SCALE IN MILLIMETERS FOR REDUCED PLANS 0 10 20 30 40 50 60 70 80 90 100

R. Manzanarez
PROJECT ENGINEER

BRIDGE NO.	34-0006L/R
KILOMETER POST	13.2/13.9

CU 04
EA 0120F1

DISREGARD PRINTS BEARING EARLIER REVISION DATES →

REVISION DATES (PRELIMINARY STAGE ONLY): 09/07/01 | 05/31/01 | 04/09/02 | 07/09/02 | 12/19/02

SHEET 045R1 OF

FILE => I:\bb\04-01200I\sas\contract plans and cco\cco\cco#23\aecpt01.dgn

SAN FRANCISCO OAKLAND BAY BRIDGE
EAST SPAN SEISMIC SAFETY PROJECT
SELF-ANCHORED SUSPENSION BRIDGE
(SUPERSTRUCTURE & TOWER)

W2 CAP BEAM POST-TENSIONING DETAILS NO. 1

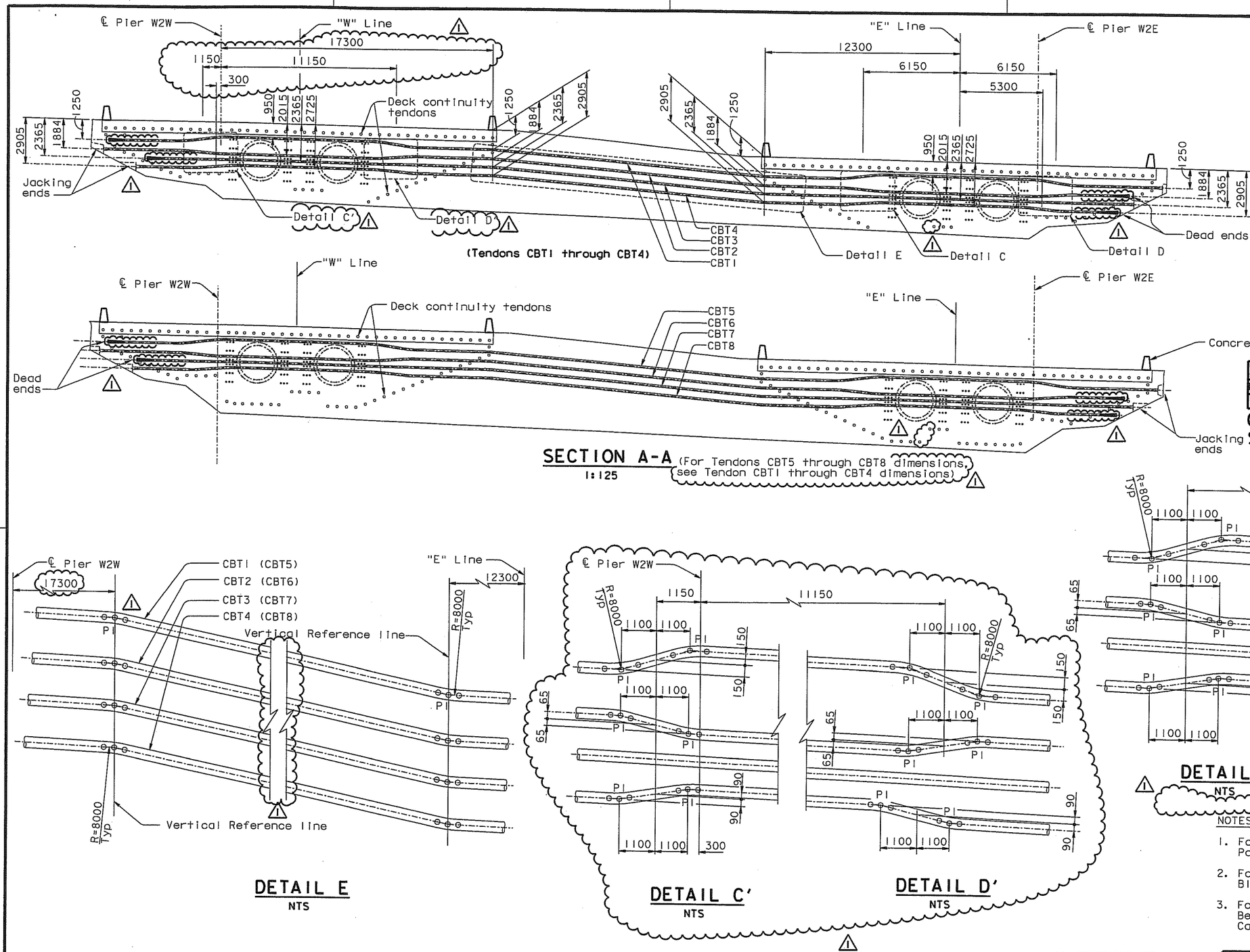

SECTION A-A (For Tendons CBT5 through CBT8 dimensions, see Tendon CBT1 through CBT4 dimensions)
1:125

DETAIL E
NTS

DETAIL C'
NTS

DETAIL D'
NTS

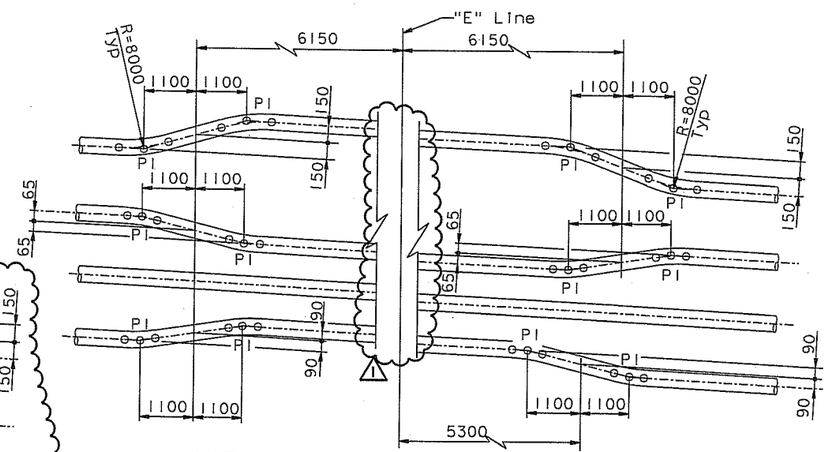

DETAIL C
NTS

DETAIL D
NTS

NOTES:

1. For additional details, see "W2 Cap Beam Post-Tensioning Details No. 1" sheet.
2. For PT blockout details, see "W2 Cap Beam Blockout Details" sheets.
3. For deck continuity tendon details, see "W2 Cap Beam Post-Tensioning Details No. 5" through "W2 Cap Beam Post-Tensioning Details No. 12" sheets.

Caltrans Metric

DIST.	COUNTY	ROUTE	KILOMETER POST TOTAL PROJECT	SHEET NO.	TOTAL SHEETS
04	SF	80	13.2/13.9	463R1	1204

REGISTERED ENGINEER - CIVIL

12-6-04
PLANS APPROVAL DATE

REGISTERED PROFESSIONAL ENGINEER John Sun No. C 54648 Exp. 12/31/05 CIVIL STATE OF CALIFORNIA

The State of California or its officers or agents shall not be responsible for the accuracy or completeness of electronic copies of this plan sheet.

T.Y. LIN / MOFFATT & NICHOL
825 BATTERY STREET
SAN FRANCISCO, CA 94111

Caltrans now has a web site! To get to the web site, go to: http://www.dot.ca.gov

REGISTERED PROFESSIONAL ENGINEER James P. Duxbury No. C 64677 Exp. 06/30/07 CIVIL STATE OF CALIFORNIA

FOR REVISIONS ONLY

MARK	DATE	DESCRIPTIONS	BY	CH'D	CCO#
1	07/21/06	W2 CAP BEAM ISD	JD	NV	23

REVISIONS

CONTRACT CHANGE ORDER NO. 23
SHEET 14 OF 102

100 % PS&E

USERNAME => vignatovs DATE PLOTTED => 10 MAY 2007 TIME PLOTTED => 09:20:31

ALL DIMENSIONS ARE IN MILLIMETERS UNLESS OTHERWISE SHOWN

R. Valizadeh/V. Toan/Y.L./W.L./F.C.
DESIGN OVERSIGHT
Roger Valizadeh / Vong Toan / Y. Lin
SIGN OFF DATE 07/21/06
Rev. Date: 5-18-98

	BY	CHECKED
DESIGN	J. Sun	M. Chen
DETAILS	J. Duxbury	M. Chen
QUANTITIES	S. Shi	D. Harrison

PREPARED FOR THE STATE OF CALIFORNIA DEPARTMENT OF TRANSPORTATION

R. Manzanarez
PROJECT ENGINEER

BRIDGE NO. 34-0006L/R
KILOMETER POST 13.2/13.9

SAN FRANCISCO OAKLAND BAY BRIDGE
EAST SPAN SEISMIC SAFETY PROJECT
SELF-ANCHORED SUSPENSION BRIDGE
(SUPERSTRUCTURE & TOWER)

W2 CAP BEAM POST-TENSIONING DETAILS NO. 2

ORIGINAL SCALE IN MILLIMETERS FOR REDUCED PLANS 0 10 20 30 40 50 60 70 80 90 100

CU 04
EA 0120F1

DISREGARD PRINTS BEARING EARLIER REVISION DATES

REVISION DATES (PRELIMINARY STAGE ONLY) 08/02/99 05/31/01 04/08/02 07/01/02 12/19/02

SHEET 046R1 OF

FILE => I:\bb\04-012001\sas\contract plans and cco\cco\cco#23\aecpt02.dgn

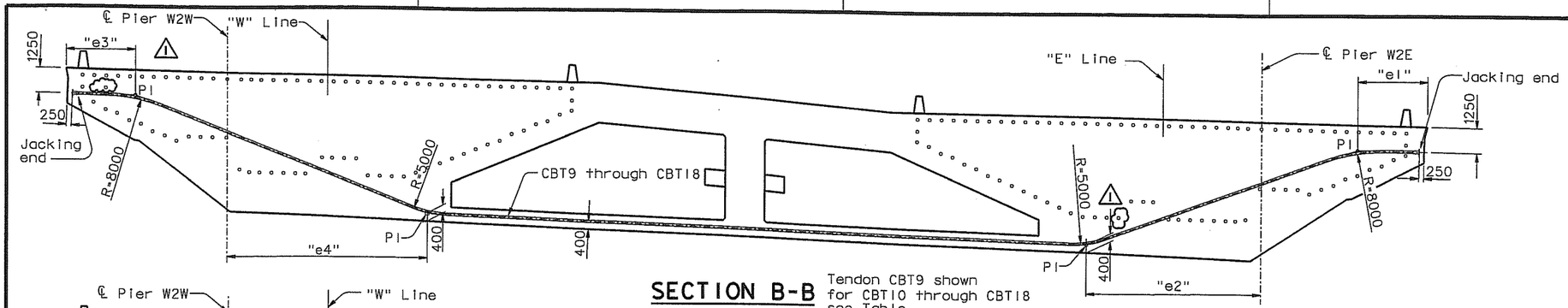

SECTION B-B
1:125

Tendon CBT9 shown for CBT10 through CBT18 see Table

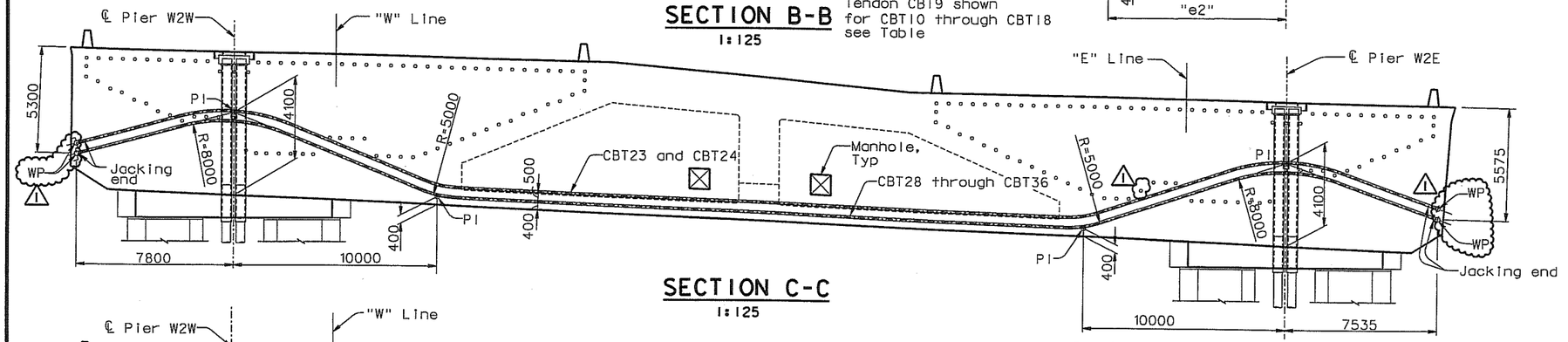

SECTION C-C
1:125

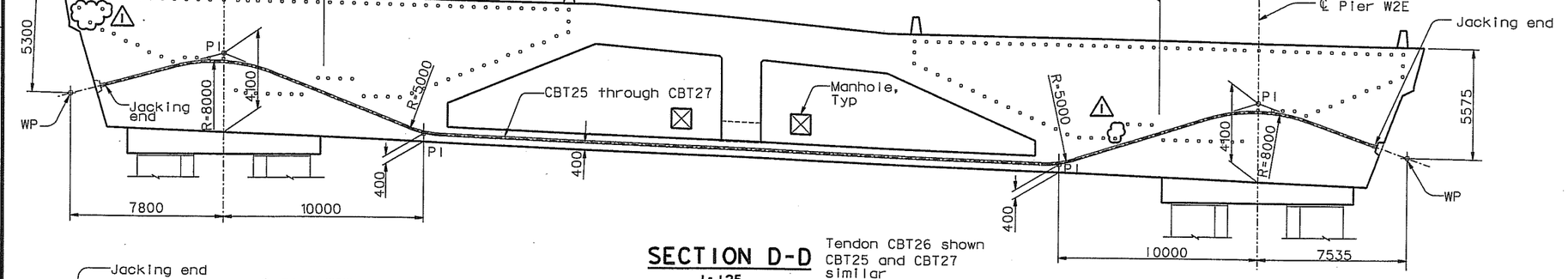

SECTION D-D
1:125

Tendon CBT26 shown CBT25 and CBT27 similar

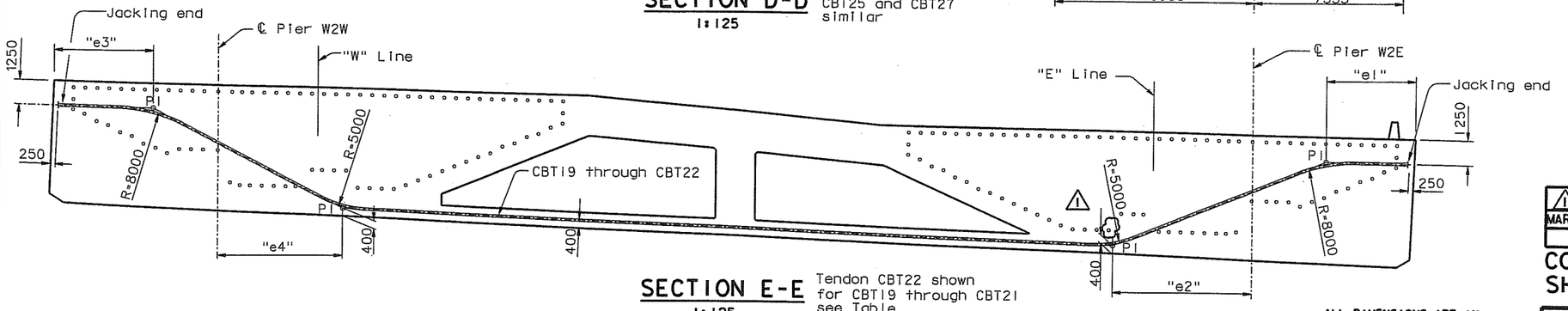

SECTION E-E
1:125

Tendon CBT22 shown for CBT19 through CBT21 see Table

CBT	e1	e2	e3	e4
9-12	3500	9250	3500	10000
13-18	3500	10000	3500	10000
19	3500	10000	3500	10000
20	3500	9000	3500	8750
21	3500	8000	3600	7500
22	4500	7000	5000	6250

NOTES:

1. For additional details, see "W2 Cap Beam Post-Tensioning Details No. 1" sheet.
2. For PT blockout details, see "W2 Cap Beam Blockout Details" sheets.

ALL DIMENSIONS ARE IN MILLIMETERS UNLESS OTHERWISE SHOWN

DIST.	COUNTY	ROUTE	KILOMETER POST TOTAL PROJECT	SHEET NO.	TOTAL SHEETS
04	SF	80	13.2/13.9	464R1	1204

Caltrans Metric

REGISTERED ENGINEER - CIVIL
John Sun No. C 54648 Exp. 12/31/05 CIVIL — REGISTERED PROFESSIONAL ENGINEER — STATE OF CALIFORNIA

12-6-04
PLANS APPROVAL DATE

The State of California or its officers or agents shall not be responsible for the accuracy or completeness of electronic copies of this plan sheet.

T.Y. LIN / MOFFATT & NICHOL
825 BATTERY STREET
SAN FRANCISCO, CA 94111

Caltrans now has a web site! To get to the web site, go to: http://www.dot.ca.gov

REGISTERED PROFESSIONAL ENGINEER — James P. Duxbury No. C 64677 Exp. 06/30/07 CIVIL — STATE OF CALIFORNIA

FOR REVISIONS ONLY

MARK	DATE	REVISIONS	BY	CH'D	CCO#
1	07/21/06	W2 CAP BEAM ISD	JD	NV	23

CONTRACT CHANGE ORDER NO. 23
SHEET 15 OF 102

100 % PS&E

R. Valizadeh/V. Toan/Y.L./W.L./F.C. DESIGN OVERSIGHT Ryan Valizadeh / Vong Toan / Y. Lui SIGN OFF DATE 07/21/06	DESIGN BY J. Sun	CHECKED M. Chen	PREPARED FOR THE STATE OF CALIFORNIA DEPARTMENT OF TRANSPORTATION
	DETAILS BY J. Duxbury	CHECKED M. Chen	
	QUANTITIES BY S. Shi	CHECKED D. Harrison	

R. Manzanarez
PROJECT ENGINEER

BRIDGE NO.	34-0006L/R
KILOMETER POST	13.2/13.9

SAN FRANCISCO OAKLAND BAY BRIDGE
EAST SPAN SEISMIC SAFETY PROJECT
SELF-ANCHORED SUSPENSION BRIDGE
(SUPERSTRUCTURE & TOWER)

W2 CAP BEAM POST-TENSIONING DETAILS NO. 3

Rev. Date: 5-18-98

ORIGINAL SCALE IN MILLIMETERS FOR REDUCED PLANS 0 10 20 30 40 50 60 70 80 90 100

CU 04
EA 0120F1

DISREGARD PRINTS BEARING EARLIER REVISION DATES

REVISION DATES (PRELIMINARY STAGE ONLY)										SHEET	OF
05/27/01	09/28/01	07/26/02	12/19/02							047R1	

FILE => I:\bb\04-012001\sas\contract plans and cco\cco\cco#23\aecpt03.dgn

USERNAME => visitor DATE PLOTTED => 27 MAR 2007 TIME PLOTTED => 16:18:19

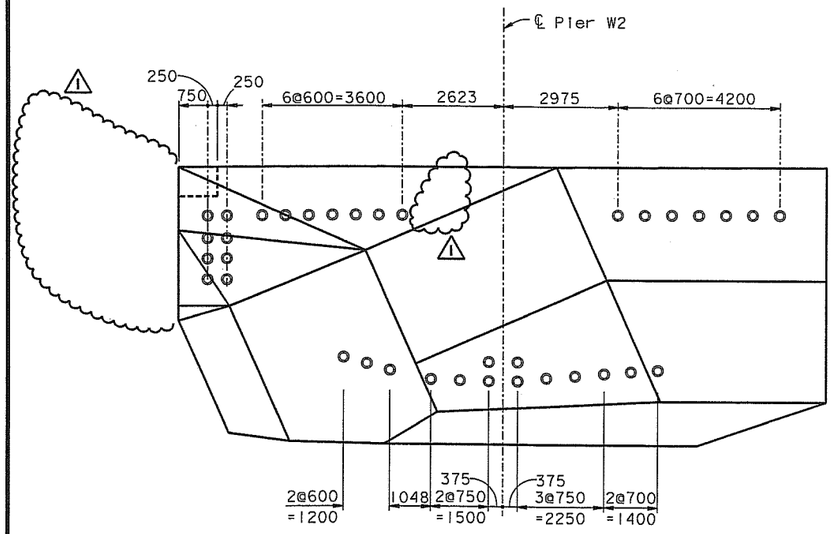

SECTION F-F
1:75

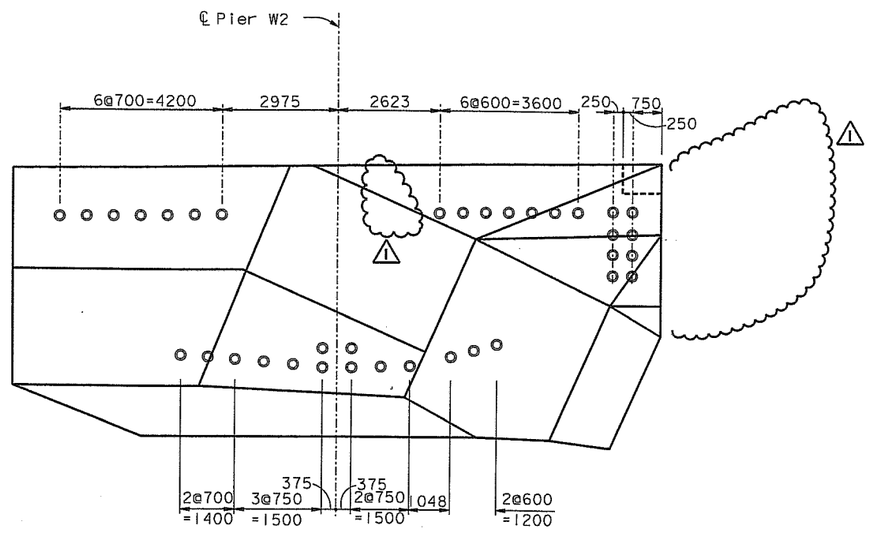

SECTION G-G
1:75

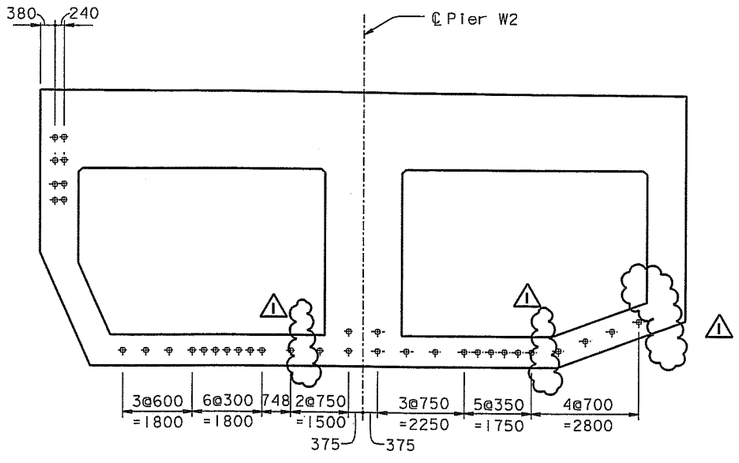

SECTION H-H
1:75

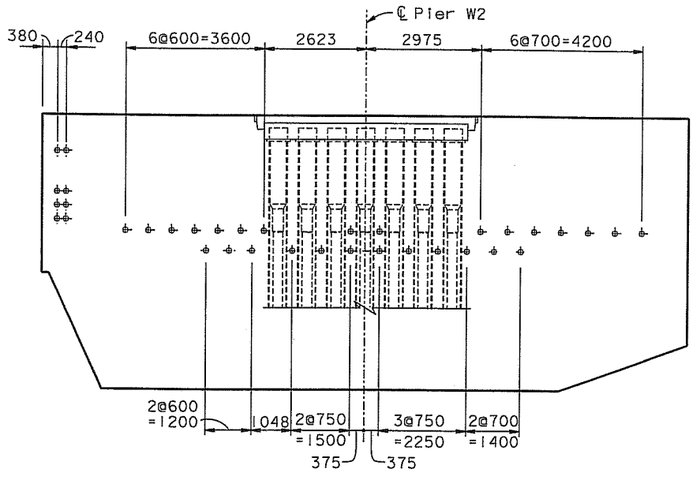

SECTION J-J
1:75

NOTES:

1. For additional details, see "W2 Cap Beam Post-Tensioning Details No.1" sheet.
2. For PT blockout details, see "W2 Cap Beam Blockout Details" sheets.

DIST.	COUNTY	ROUTE	KILOMETER POST TOTAL PROJECT	SHEET NO.	TOTAL SHEETS
04	SF	80	13.2/13.9	465R1	1204

REGISTERED ENGINEER - CIVIL

12-6-04
PLANS APPROVAL DATE

REGISTERED PROFESSIONAL ENGINEER — John Sun — No. C 54648 — Exp. 12/31/05 — CIVIL — STATE OF CALIFORNIA

The State of California or its officers or agents shall not be responsible for the accuracy or completeness of electronic copies of this plan sheet.

T.Y. LIN / MOFFATT & NICHOL
825 BATTERY STREET
SAN FRANCISCO, CA 94111

Caltrans now has a web site! To get to the web site, go to: http://www.dot.ca.gov

FOR REVISIONS ONLY — REGISTERED PROFESSIONAL ENGINEER — James P. Duxbury — No. C 64677 — Exp. 06/30/07 — CIVIL — STATE OF CALIFORNIA

MARK	DATE	REVISIONS DESCRIPTIONS	BY	CH'D	CCO#
1	07/21/06	W2 CAP BEAM ISD	JD	NV	23

CONTRACT CHANGE ORDER NO. 23
SHEET 16 OF 102

ALL DIMENSIONS ARE IN MILLIMETERS UNLESS OTHERWISE SHOWN

R. Vallzadeh/V. Toan/Y.L./W.L./F.C.
DESIGN OVERSIGHT
SIGN OFF DATE 07/21/06

Rev. Date: 5-18-98

	BY	CHECKED
DESIGN	J. Sun	M. Chen
DETAILS	J. Duxbury	M. Chen
QUANTITIES	S. Shi	D. Harrison

ORIGINAL SCALE IN MILLIMETERS FOR REDUCED PLANS 0 10 20 30 40 50 60 70 80 90 100

PREPARED FOR THE STATE OF CALIFORNIA
DEPARTMENT OF TRANSPORTATION

R. Manzanarez
PROJECT ENGINEER

CU 04
EA 0120F1

BRIDGE NO. 34-0006L/R
KILOMETER POST 13.2/13.9

SAN FRANCISCO OAKLAND BAY BRIDGE
EAST SPAN SEISMIC SAFETY PROJECT
SELF-ANCHORED SUSPENSION BRIDGE
(SUPERSTRUCTURE & TOWER)

W2 CAP BEAM POST-TENSIONING DETAILS NO.4

DISREGARD PRINTS BEARING EARLIER REVISION DATES

REVISION DATES (PRELIMINARY STAGE ONLY): 09/07/99 | 05/31/01 | 04/09/02 | 07/09/02 | 12/19/02

SHEET 048R1 OF

FILE => I:\bb\04-01200I\sas\contract plans and cco\cco\cco#23\decpt04.dgn

100 % PS&E

USERNAME => visitor DATE PLOTTED => 27 MAR 2007 TIME PLOTTED => 16:18:56

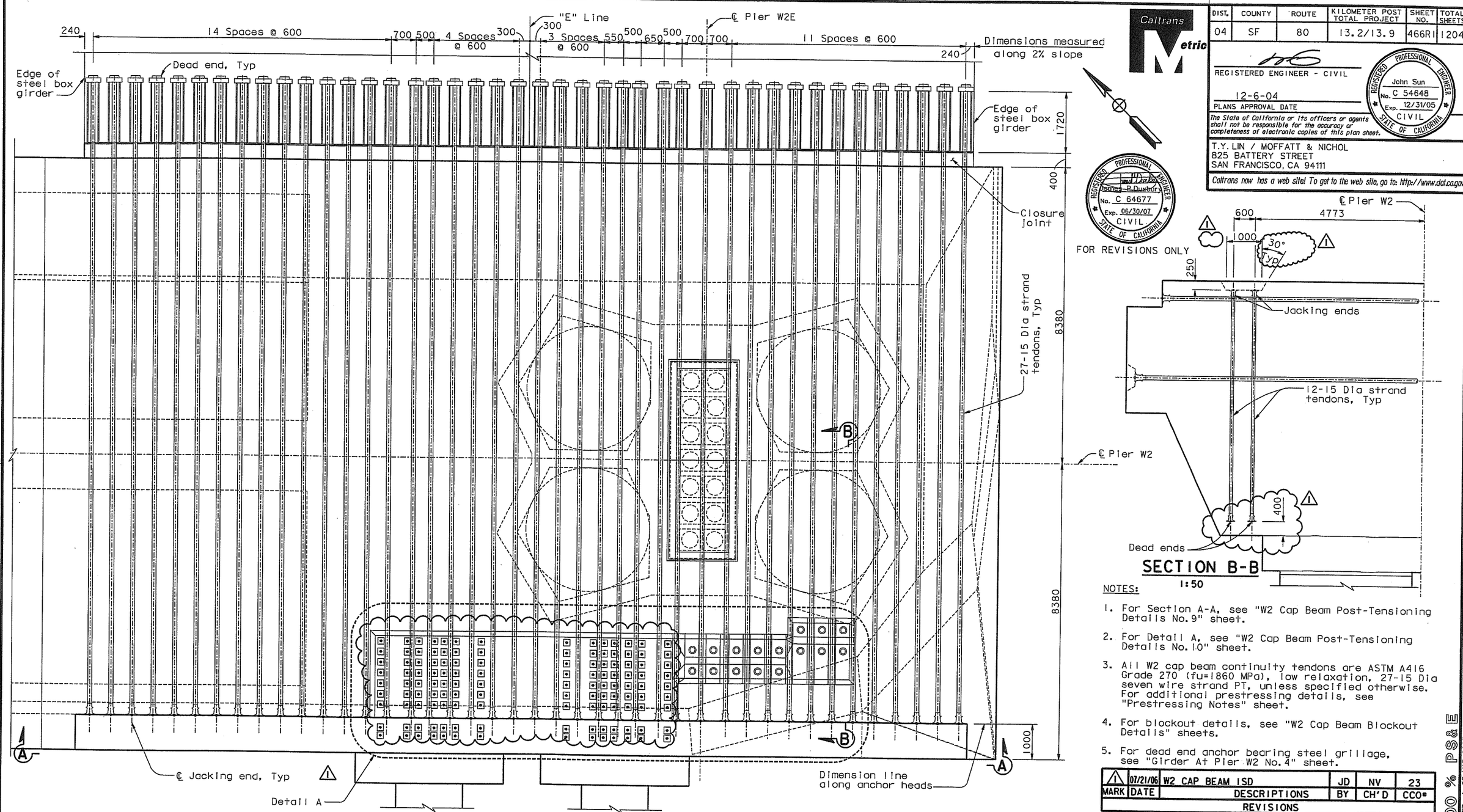

TOP TENDON LAYOUT PLAN ("E" Line)

1:50

SECTION B-B

1:50

NOTES:

1. For Section A-A, see "W2 Cap Beam Post-Tensioning Details No. 9" sheet.
2. For Detail A, see "W2 Cap Beam Post-Tensioning Details No. 10" sheet.
3. All W2 cap beam continuity tendons are ASTM A416 Grade 270 (fu=1860 MPa), low relaxation, 27-15 Dia seven wire strand PT, unless specified otherwise. For additional prestressing details, see "Prestressing Notes" sheet.
4. For blockout details, see "W2 Cap Beam Blockout Details" sheets.
5. For dead end anchor bearing steel grillage, see "Girder At Pier W2 No. 4" sheet.

MARK	DATE	REVISIONS	BY	CH'D	CCO#
1	07/21/06	W2 CAP BEAM ISD	JD	NV	23

CONTRACT CHANGE ORDER NO. 23
SHEET 17 OF 102

ALL DIMENSIONS ARE IN MILLIMETERS UNLESS OTHERWISE SHOWN

DIST.	COUNTY	ROUTE	KILOMETER POST TOTAL PROJECT	SHEET NO.	TOTAL SHEETS
04	SF	80	13.2/13.9	466RI	1204

REGISTERED ENGINEER - CIVIL
John Sun, No. C 54648, Exp. 12/31/05, CIVIL, STATE OF CALIFORNIA
12-6-04
PLANS APPROVAL DATE

The State of California or its officers or agents shall not be responsible for the accuracy or completeness of electronic copies of this plan sheet.

T.Y. LIN / MOFFATT & NICHOL
825 BATTERY STREET
SAN FRANCISCO, CA 94111

Caltrans now has a web site! To get to the web site, go to: http://www.dot.ca.gov

FOR REVISIONS ONLY
James P. Duxbury, No. C 64677, Exp. 06/30/07, CIVIL, STATE OF CALIFORNIA

R. Valizadeh/V. Toan/Y.L./W.L./F.C.	DESIGN	BY J. Sun	CHECKED M. Chen
DESIGN OVERSIGHT	DETAILS	BY J. Duxbury	CHECKED M. Chen
Ron Vaiz for/ Voup Toan/ Y. Liu	QUANTITIES	BY S. Shi	CHECKED D. Harrison
SIGN OFF DATE 07/21/06			

Rev. Date: 5-18-98

PREPARED FOR THE STATE OF CALIFORNIA
DEPARTMENT OF TRANSPORTATION

R. Manzanarez
PROJECT ENGINEER

CU 04
EA 0120F1

BRIDGE NO. 34-0006L/R
KILOMETER POST 13.2/13.9

DISREGARD PRINTS BEARING EARLIER REVISION DATES

ORIGINAL SCALE IN MILLIMETERS FOR REDUCED PLANS 0 10 20 30 40 50 60 70 80 90 100

SAN FRANCISCO OAKLAND BAY BRIDGE
EAST SPAN SEISMIC SAFETY PROJECT
SELF-ANCHORED SUSPENSION BRIDGE
(SUPERSTRUCTURE & TOWER)

W2 CAP BEAM POST-TENSIONING DETAILS NO. 5

REVISION DATES (PRELIMINARY STAGE ONLY)								SHEET	OF
05/07/99	05/31/01	04/09/02	07/01/02	12/19/02				049RI	

FILE => I:\bb\04-0120F1\sas\contract plans and cco\cco\cco#23\aecpt05.dgn

100 % PS&E
DATE PLOTTED => 27 MAR 2007 TIME PLOTTED => 16:19:33
USERNAME => visitor

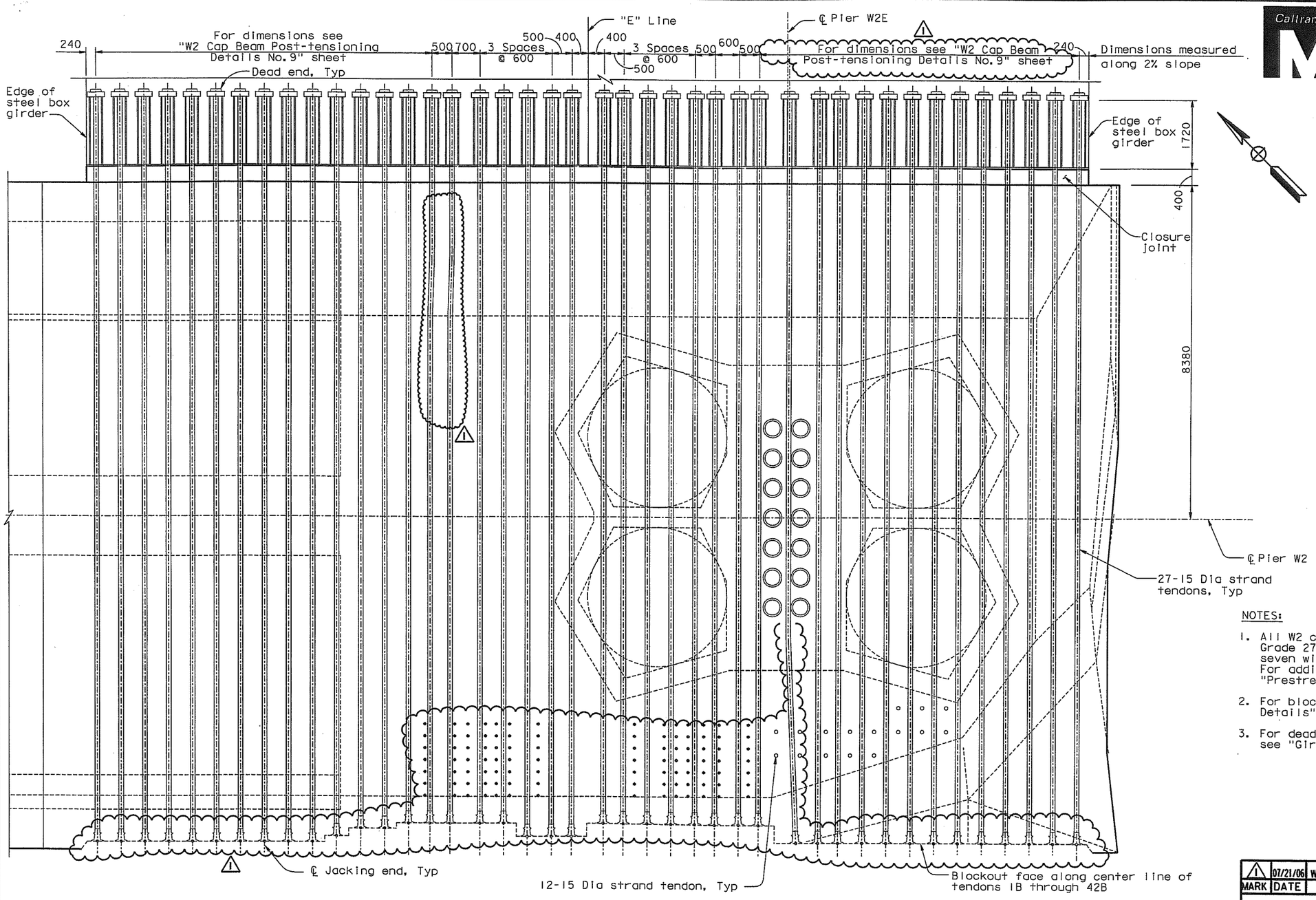

BOTTOM TENDON LAYOUT PLAN
1:50 ("E Line")

NOTES:

1. All W2 cap beam continuity tendons are ASTM A416 Grade 270 (fu=1860 MPa), low relaxation, 27-15 Dia seven wire strand PT, unless specified otherwise. For additional prestressing details, see "Prestressing Notes" sheet.
2. For blockout details, see "W2 Cap Beam Blockout Details" sheets.
3. For dead end anchor bearing steel grillage, see "Girder At Pier W2 No. 4" sheet.

ALL DIMENSIONS ARE IN MILLIMETERS UNLESS OTHERWISE SHOWN

DIST.	COUNTY	ROUTE	KILOMETER POST TOTAL PROJECT	SHEET NO.	TOTAL SHEETS
04	SF	80	13.2/13.9	467R1	1204

REGISTERED ENGINEER - CIVIL

12-6-04
PLANS APPROVAL DATE

REGISTERED PROFESSIONAL ENGINEER — John Sun — No. C 54648 — Exp. 12/31/05 — CIVIL — STATE OF CALIFORNIA

The State of California or its officers or agents shall not be responsible for the accuracy or completeness of electronic copies of this plan sheet.

T.Y. LIN / MOFFATT & NICHOL
825 BATTERY STREET
SAN FRANCISCO, CA 94111

Caltrans now has a web site! To get to the web site, go to: http://www.dot.ca.gov

REGISTERED PROFESSIONAL ENGINEER — James P. Duxbury — No. C 64677 — Exp. 06/30/07 — CIVIL — STATE OF CALIFORNIA

FOR REVISIONS ONLY

MARK	DATE	REVISIONS / DESCRIPTIONS	BY	CH'D	CCO#
1	07/21/06	W2 CAP BEAM ISD	JD	NV	23

CONTRACT CHANGE ORDER NO. 23
SHEET 18 OF 102

100 % PS&E

R. Vaziadeh/V. Toan/Y.L./W.L./F.C.	DESIGN	BY J. Sun	CHECKED M. Chen
DESIGN OVERSIGHT	DETAILS	BY J. Duxbury	CHECKED M. Chen
SIGN OFF DATE 07/21/06	QUANTITIES	BY S. Shi	CHECKED D. Harrison

PREPARED FOR THE STATE OF CALIFORNIA
DEPARTMENT OF TRANSPORTATION

R. Manzanarez
PROJECT ENGINEER

BRIDGE NO. 34-0006L/R
KILOMETER POST 13.2/13.9

SAN FRANCISCO OAKLAND BAY BRIDGE
EAST SPAN SEISMIC SAFETY PROJECT
SELF-ANCHORED SUSPENSION BRIDGE
(SUPERSTRUCTURE & TOWER)

W2 CAP BEAM POST-TENSIONING DETAILS NO. 6

Rev. Date: 5-18-98

ORIGINAL SCALE IN MILLIMETERS FOR REDUCED PLANS 0 10 20 30 40 50 60 70 80 90 100

CU 04
EA 0120F1

DISREGARD PRINTS BEARING EARLIER REVISION DATES → REVISION DATES (PRELIMINARY STAGE ONLY): 05/01/99 | 05/31/01 | 04/30/02 | 07/01/02 | 12/15/02 | SHEET 050R1 | OF

FILE => I:\bb\04-012001\sas\contract plans and cco\cco\cco#23\aecpt06.dgn

USERNAME => visitor DATE PLOTTED => 27 MAR 2007 TIME PLOTTED => 16:22:21

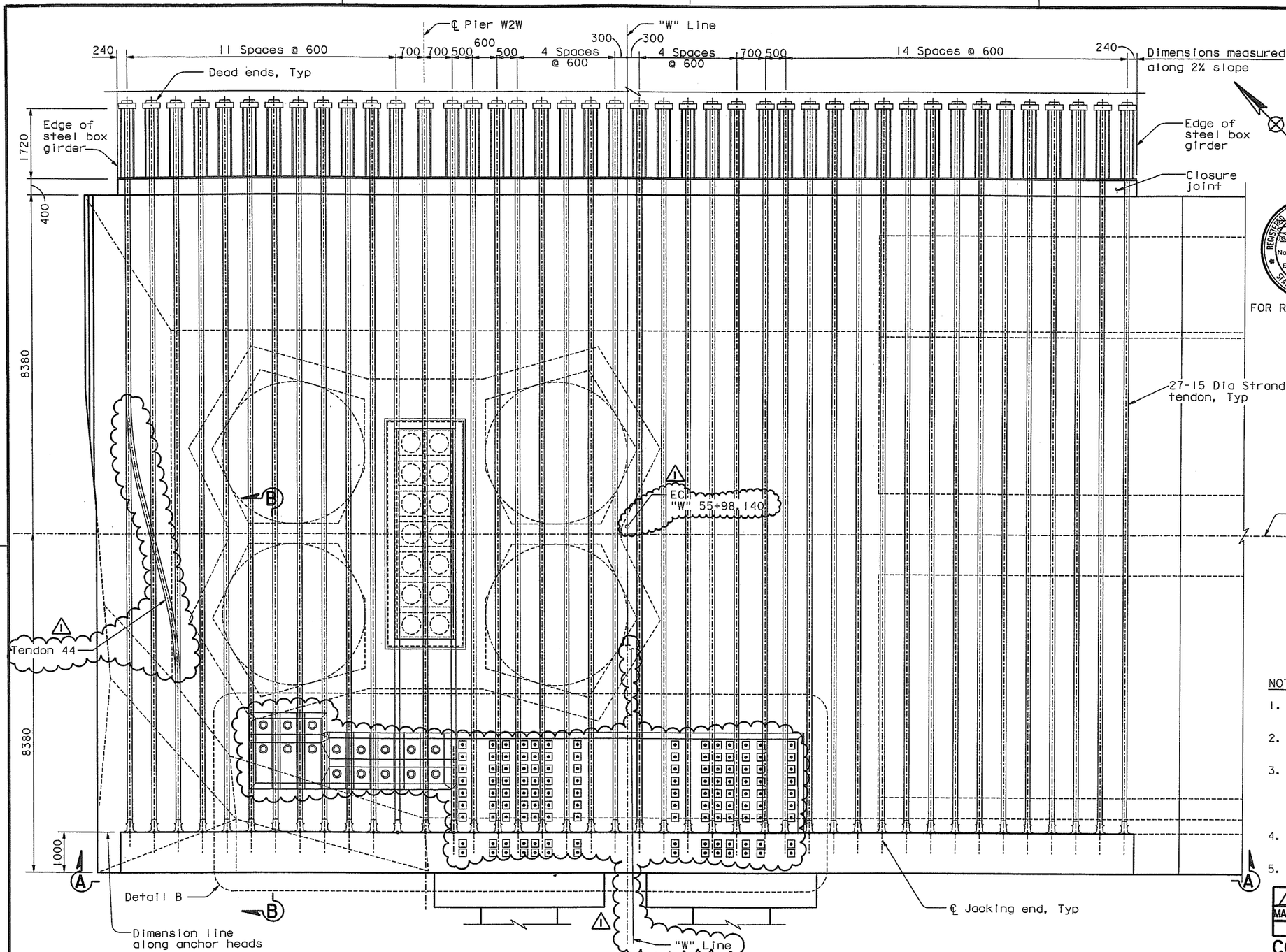

TOP TENDON LAYOUT PLAN ("W" Line)
1:50

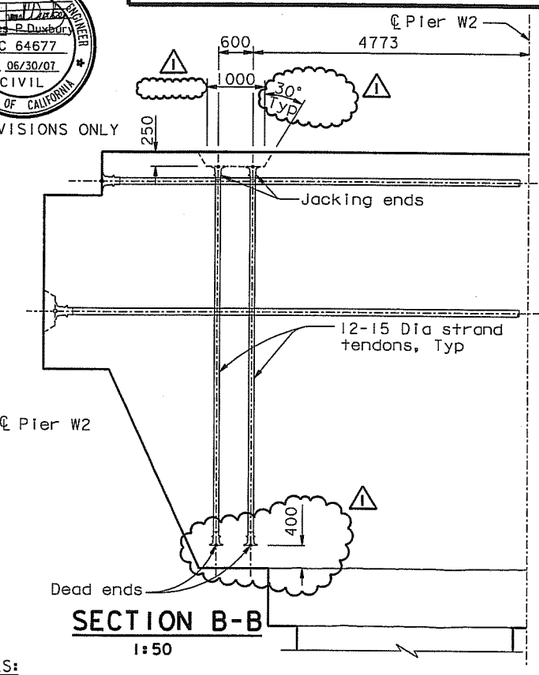

SECTION B-B
1:50

NOTES:

1. For Section A-A, see "W2 Cap Beam Post-Tensioning Details No. 9" sheet.
2. For Detail B, see "W2 Cap Beam Post-Tensioning Details No. 10" sheet.
3. All W2 cap beam continuity tendons are ASTM A416 Grade 270 (fu=1860 MPa), low relaxation, 27-15 Dia seven wire strand PT, unless specified otherwise. For additional prestressing details, see "Prestressing Notes" sheet.
4. For blockout details, see "W2 Cap Beam Blockout Details" sheets.
5. For dead end anchor bearing steel grillage, see "Girder At Pier W2 No. 4" sheet.

MARK	DATE	DESCRIPTIONS	BY	CH'D	CCO#
1	07/21/06	W2 CAP BEAM ISD	JD	NV	23

REVISIONS

CONTRACT CHANGE ORDER NO. 23
SHEET 19 OF 102

ALL DIMENSIONS ARE IN MILLIMETERS UNLESS OTHERWISE SHOWN

DIST.	COUNTY	ROUTE	KILOMETER POST TOTAL PROJECT	SHEET NO.	TOTAL SHEETS
04	SF	80	13.2/13.9	468R1	1204

Caltrans Metric

REGISTERED ENGINEER - CIVIL
12-6-04
PLANS APPROVAL DATE

REGISTERED PROFESSIONAL ENGINEER John Sun No. C 54648 Exp. 12/31/05 CIVIL STATE OF CALIFORNIA

The State of California or its officers or agents shall not be responsible for the accuracy or completeness of electronic copies of this plan sheet.

T.Y. LIN / MOFFATT & NICHOL
825 BATTERY STREET
SAN FRANCISCO, CA 94111

Caltrans now has a web site! To get to the web site, go to: http://www.dot.ca.gov

REGISTERED PROFESSIONAL ENGINEER James P. Duxbury No. C 64677 Exp. 06/30/07 CIVIL STATE OF CALIFORNIA

FOR REVISIONS ONLY

R. Valizadeh/V. Toan/Y.L./W.L./F.C.
DESIGN OVERSIGHT
Roger Valizadeh / Vong P. Toan / Y. Lin
SIGN OFF DATE 07/21/06

	BY	CHECKED
DESIGN	J. Sun	M. Chen
DETAILS	J. Duxbury	M. Chen
QUANTITIES	S. Shi	D. Harrison

PREPARED FOR THE STATE OF CALIFORNIA DEPARTMENT OF TRANSPORTATION

R. Manzanarez
PROJECT ENGINEER

BRIDGE NO. 34-0006L/R
KILOMETER POST 13.2/13.9

SAN FRANCISCO OAKLAND BAY BRIDGE
EAST SPAN SEISMIC SAFETY PROJECT
SELF-ANCHORED SUSPENSION BRIDGE
(SUPERSTRUCTURE & TOWER)

W2 CAP BEAM POST-TENSIONING DETAILS NO. 7

Rev. Date: 5-18-98

ORIGINAL SCALE IN MILLIMETERS FOR REDUCED PLANS 0 10 20 30 40 50 60 70 80 90 100

CU 04
EA 0120F1

DISREGARD PRINTS BEARING EARLIER REVISION DATES

REVISION DATES (PRELIMINARY STAGE ONLY) 08/02/99 05/31/01 04/08/02 07/01/02 12/19/02

SHEET 051R1 OF

FILE => I:\bb\04-012001\sas\contract plans and cco\cco\cco#23\aecpt07.dgn

USERNAME => visitor DATE PLOTTED => 02 APR 2007 TIME PLOTTED => 10:43:27

100 % PS&E

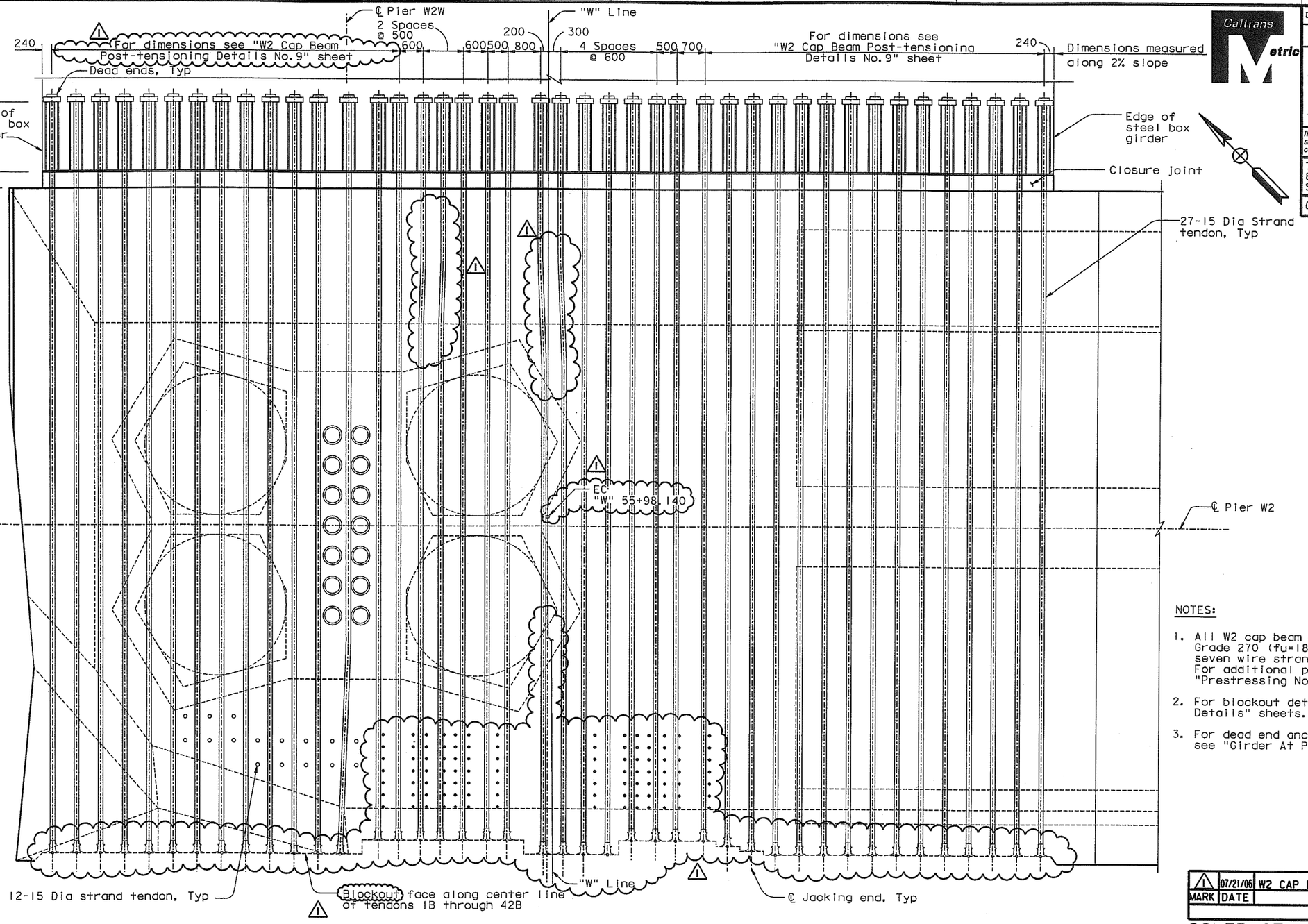

BOTTOM TENDON LAYOUT PLAN ("W" Line)

1:50

ALL DIMENSIONS ARE IN MILLIMETERS UNLESS OTHERWISE SHOWN

NOTES:

1. All W2 cap beam continuity tendons are ASTM A416 Grade 270 (fu=1860 MPa), low relaxation, 27-15 Dia seven wire strand PT, unless specified otherwise. For additional prestressing details, see "Prestressing Notes" sheet.
2. For blockout details, see "W2 Cap Beam Blockout Details" sheets.
3. For dead end anchor bearing steel grillage, see "Girder At Pier W2 No.4" sheet.

Caltrans Metric

DIST.	COUNTY	ROUTE	KILOMETER POST TOTAL PROJECT	SHEET NO.	TOTAL SHEETS
04	SF	80	13.2/13.9	469RI	1204

REGISTERED ENGINEER - CIVIL

12-6-04
PLANS APPROVAL DATE

REGISTERED PROFESSIONAL ENGINEER — John Sun — No. C 54648 — Exp. 12/31/05 — CIVIL — STATE OF CALIFORNIA

The State of California or its officers or agents shall not be responsible for the accuracy or completeness of electronic copies of this plan sheet.

T.Y. LIN / MOFFATT & NICHOL
825 BATTERY STREET
SAN FRANCISCO, CA 94111

Caltrans now has a web site! To get to the web site, go to: http://www.dot.ca.gov

REGISTERED PROFESSIONAL ENGINEER — James P. Duxbury — No. C 64677 — Exp. 06/30/07 — CIVIL — STATE OF CALIFORNIA

FOR REVISIONS ONLY

MARK	DATE	REVISIONS / DESCRIPTIONS	BY	CH'D	CCO#
1	07/21/06	W2 CAP BEAM ISD	JD	NV	23

CONTRACT CHANGE ORDER NO. 23
SHEET 20 OF 102

100 % PS&E

R. Valizadeh/V. Toan/Y.L./W.L./F.C.
DESIGN OVERSIGHT
SIGN OFF DATE 07/21/06

Rev. Date: 5-18-98

	BY	CHECKED
DESIGN	J. Sun	M. Chen
DETAILS	J. Duxbury	M. Chen
QUANTITIES	S. Shi	D. Harrison

PREPARED FOR THE STATE OF CALIFORNIA
DEPARTMENT OF TRANSPORTATION

R. Manzanarez
PROJECT ENGINEER

BRIDGE NO. 34-0006L/R
KILOMETER POST 13.2/13.9

SAN FRANCISCO OAKLAND BAY BRIDGE
EAST SPAN SEISMIC SAFETY PROJECT
SELF-ANCHORED SUSPENSION BRIDGE
(SUPERSTRUCTURE & TOWER)

W2 CAP BEAM POST-TENSIONING DETAILS NO.8

ORIGINAL SCALE IN MILLIMETERS FOR REDUCED PLANS 0 10 20 30 40 50 60 70 80 90 100

CU 04
EA 0120F1

DISREGARD PRINTS BEARING EARLIER REVISION DATES

REVISION DATES (PRELIMINARY STAGE ONLY): 05/27/99 | 05/31/01 | 04/09/02 | 07/09/02 | 12/19/02

SHEET 052RI OF

FILE => I:\bb\04-0120F1\sas\contract plans and cco\cco\cco#23\aeopt08.dgn

USERNAME => visitor DATE PLOTTED => 02 APR 2007 TIME PLOTTED => 10:44:18

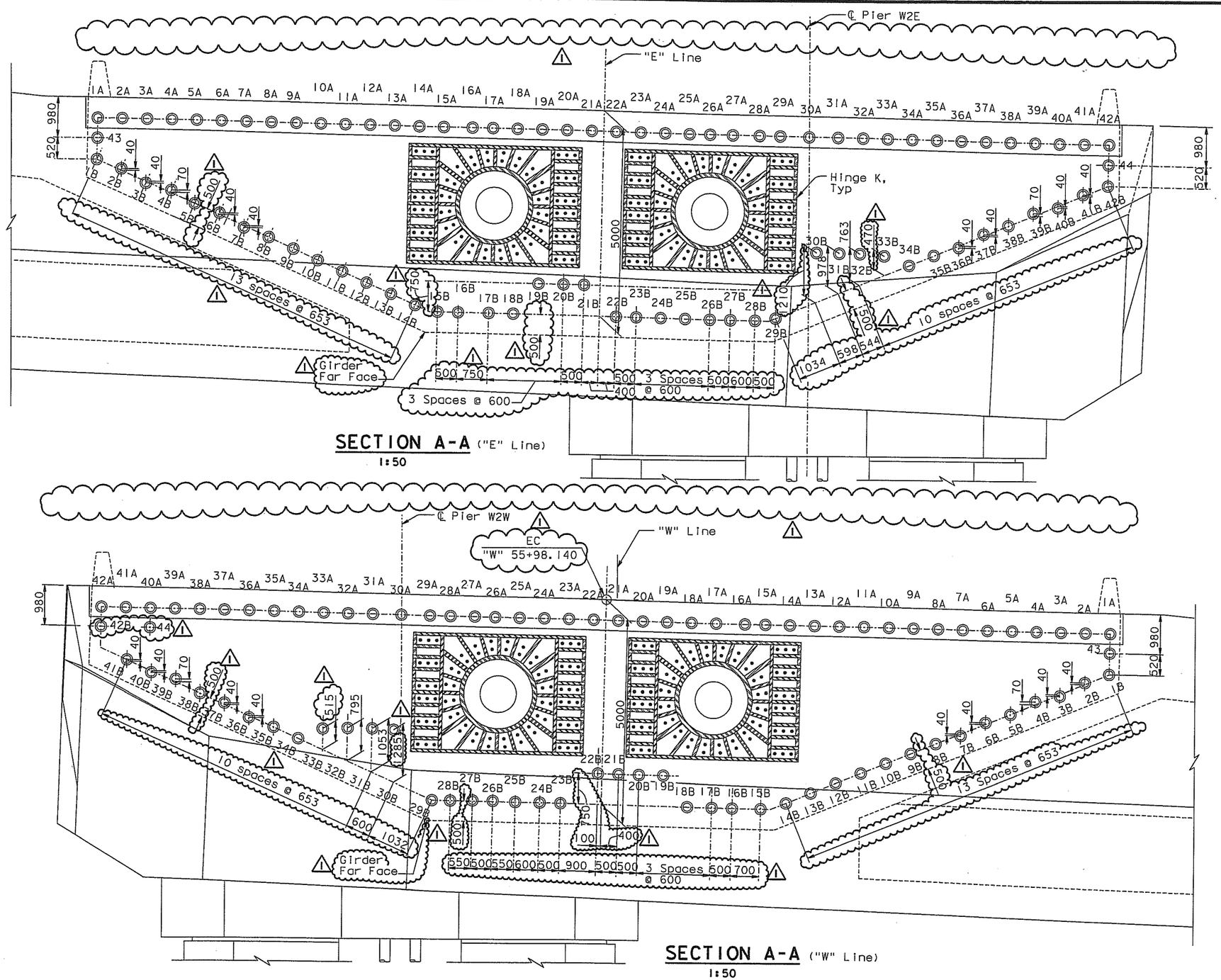

SECTION A-A ("E" Line)
1:50

SECTION A-A ("W" Line)
1:50

NOTES:

1. For additional details, see "W2 Cap Beam Post-Tensioning Details No.5" and "W2 Cap Beam Post-Tensioning Details No.7" sheets.
2. Jacking force in the W2 cap beam continuity tendons (1A-42A, 1B-42B,43 & 44) shall be 5265 kN typical.

ALL DIMENSIONS ARE IN MILLIMETERS UNLESS OTHERWISE SHOWN

Caltrans Metric

DIST.	COUNTY	ROUTE	KILOMETER POST TOTAL PROJECT	SHEET NO.	TOTAL SHEETS
04	SF	80	13.2/13.9	470R1	1204

REGISTERED ENGINEER - CIVIL

12-6-04
PLANS APPROVAL DATE

REGISTERED PROFESSIONAL ENGINEER — John Sun — No. C 54648 — Exp. 12/31/05 — CIVIL — STATE OF CALIFORNIA

The State of California or its officers or agents shall not be responsible for the accuracy or completeness of electronic copies of this plan sheet.

T.Y. LIN / MOFFATT & NICHOL
825 BATTERY STREET
SAN FRANCISCO, CA 94111

Caltrans now has a web site! To get to the web site, go to: http://www.dot.ca.gov

REGISTERED PROFESSIONAL ENGINEER — James P. Duxbury — No. C 64677 — Exp. 06/30/07 — CIVIL — STATE OF CALIFORNIA

FOR REVISIONS ONLY

MARK	DATE	REVISIONS DESCRIPTIONS	BY	CH'D	CCO#
1	07/21/06	W2 CAP BEAM ISD	JD	NV	23

CONTRACT CHANGE ORDER NO. 23
SHEET 21 OF 102

100 % PS&E

R. Valizadeh/V. Toan/Y.L./W.L./F.C.
DESIGN OVERSIGHT
SIGN OFF DATE 07/21/06

Rev. Date: 5-18-98

	BY	CHECKED
DESIGN	J. Sun	M. Chen
DETAILS	J. Duxbury	M. Chen
QUANTITIES	S. Shi	D. Harrison

PREPARED FOR THE STATE OF CALIFORNIA
DEPARTMENT OF TRANSPORTATION

R. Manzanarez
PROJECT ENGINEER

CU 04
EA 0120F1

BRIDGE NO. 34-0006L/R
KILOMETER POST 13.2/13.9

SAN FRANCISCO OAKLAND BAY BRIDGE
EAST SPAN SEISMIC SAFETY PROJECT
SELF-ANCHORED SUSPENSION BRIDGE
(SUPERSTRUCTURE & TOWER)

W2 CAP BEAM POST-TENSIONING DETAILS NO.9

ORIGINAL SCALE IN MILLIMETERS FOR REDUCED PLANS 0 10 20 30 40 50 60 70 80 90 100

DISREGARD PRINTS BEARING EARLIER REVISION DATES

REVISION DATES (PRELIMINARY STAGE ONLY)									SHEET	OF
05/26/99	05/31/01	04/09/02	01/25/02	12/19/02					053R1	

FILE => I:\bb\04-01200\sas\contract plans and cco\cco\cco#23\aecpt09.dgn

USERNAME => vlgnotov\DATE PLOTTED => 10 MAY 2007 TIME PLOTTED => 09:26:58

To get to the web site, go to: http://www.dot.ca.gov

MARK	DATE	REVISIONS	BY	CH'D	CCO#
1	07/21/06	W2 CAP BEAM ISD	JD	NV	23

CONTRACT CHANGE ORDER NO. 23
SHEET 22 OF 102

Caltrans Metric

DIST.	COUNTY	ROUTE	KILOMETER POST TOTAL PROJECT	SHEET NO.	TOTAL SHEETS
04	SF	80	13.2/13.9	471R1	1204

REGISTERED ENGINEER - CIVIL
12-6-04
PLANS APPROVAL DATE
REGISTERED PROFESSIONAL ENGINEER John Sun No. C 54648 Exp. 12/31/05 CIVIL STATE OF CALIFORNIA

The State of California or its officers or agents shall not be responsible for the accuracy or completeness of electronic copies of this plan sheet.

T.Y. LIN / MOFFATT & NICHOL
825 BATTERY STREET
SAN FRANCISCO, CA 94111

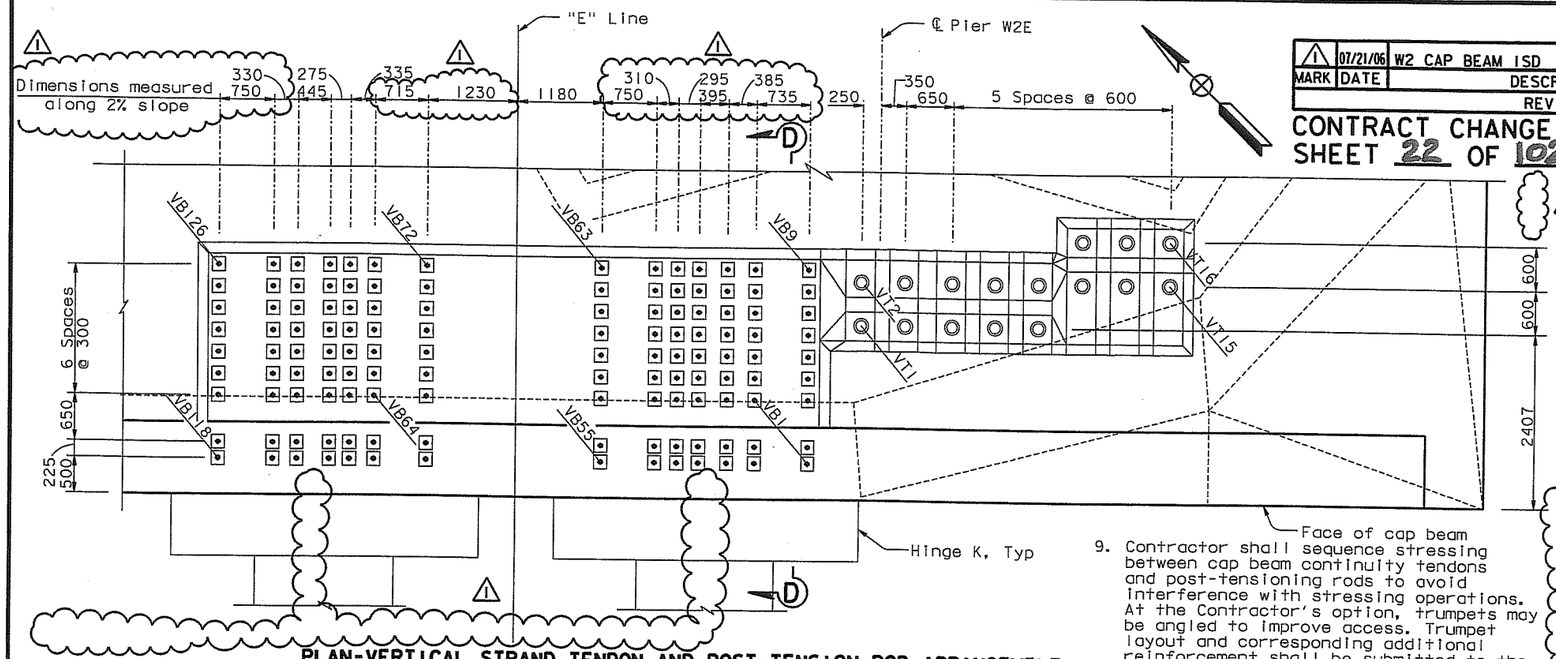

PLAN-VERTICAL STRAND TENDON AND POST-TENSION ROD ARRANGEMENT
DETAIL A
1:40

9. Contractor shall sequence stressing between cap beam continuity tendons and post-tensioning rods to avoid interference with stressing operations. At the Contractor's option, trumpets may be angled to improve access. Trumpet layout and corresponding additional reinforcement shall be submitted to the Engineer for review and approval.

10. Blockouts at the dead end are not required. At the Contractor's option, blockouts can be provided, subject to the Engineers review and approval of the blockout and reinforcement details.

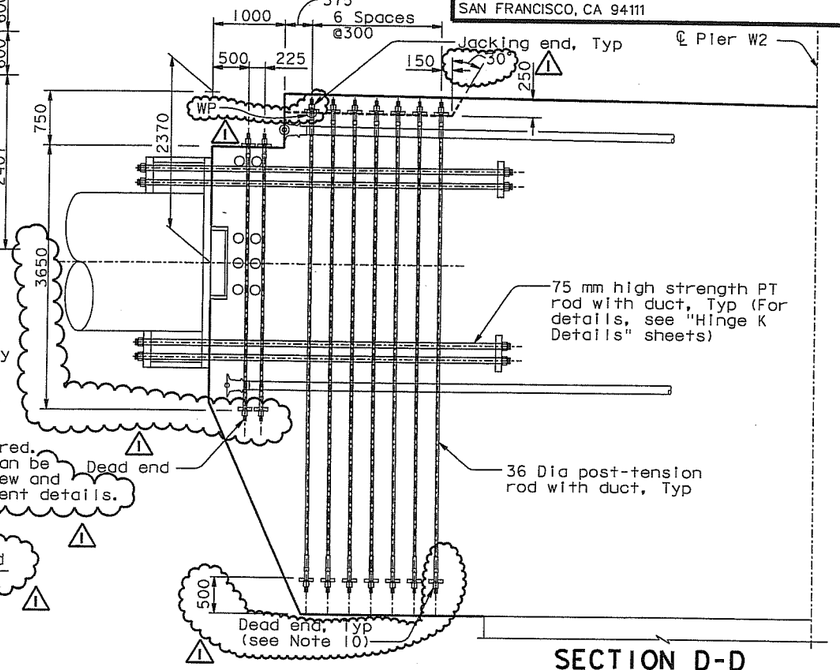

SECTION D-D
1:20 (see Note 9)

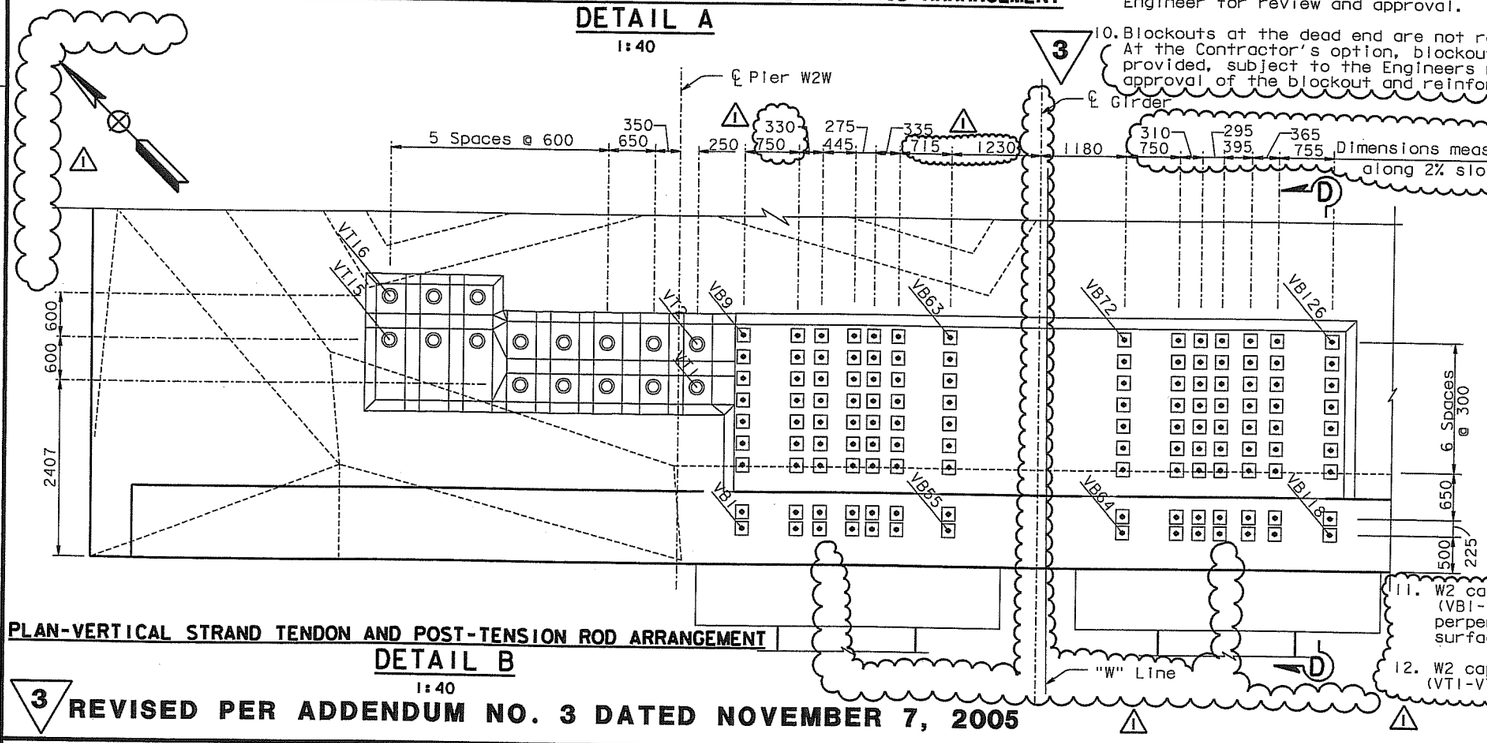

PLAN-VERTICAL STRAND TENDON AND POST-TENSION ROD ARRANGEMENT
DETAIL B
1:40

11. W2 cap beam vertical PT rods (VB1-VB126) shall be placed perpendicular to the top concrete surface.

12. W2 cap beam vertical tendons (VT1-VT16) shall be placed vertical.

FOR REVISIONS ONLY

NOTES:

1. For additional details, see "W2 Cap Beam Post-Tensioning Details No.5" and "W2 Cap Beam Post-Tensioning Details No.7" sheets.
2. Jacking force in the W2 cap beam vertical tendons (VT1-VT16) shall be 2350 kN typical.
3. Jacking force in the W2 cap beam vertical PT rods (VB1-VB126) shall be 734 kN typical.
4. For hinge K details, see "Hinge K Details" sheets.
5. W2 cap beam vertical PT rods are ASTM A722 high strength 36 Dia rods (fu=1030 MPa), with standard galvanized steel ducts, unless specified otherwise.
6. W2 cap beam vertical tendons are ASTM A416 Grade 270 (fu=1860 MPa), low relaxation, 12-15 Dia seven wire strand PT, unless specified otherwise.
7. For additional prestressing details, see "Prestressing Notes" sheet.
8. For general stressing sequence, see "Pier W2 Construction Sequence" sheet.

3 REVISED PER ADDENDUM NO. 3 DATED NOVEMBER 7, 2005

ALL DIMENSIONS ARE IN MILLIMETERS UNLESS OTHERWISE SHOWN

100 % PS&E

USERNAME => vigneravs DATE PLOTTED => 10 MAY 2007 TIME PLOTTED => 09:28:52

R. Vallzadeh/V. Toan/Y.L./W.L./F.C.
DESIGN OVERSIGHT
Ryan Vallezadeh / Vong Toan / Y. Liu
SIGN OFF DATE 07/21/06

	BY	CHECKED
DESIGN	J. Sun	M. Chen
DETAILS	J. Duxbury	M. Chen
QUANTITIES	S. Shi	D. Harrison

PREPARED FOR THE STATE OF CALIFORNIA DEPARTMENT OF TRANSPORTATION

R. Manzanarez
PROJECT ENGINEER

BRIDGE NO.	34-0006L/R
KILOMETER POST	13.2/13.9

SAN FRANCISCO OAKLAND BAY BRIDGE
EAST SPAN SEISMIC SAFETY PROJECT
SELF-ANCHORED SUSPENSION BRIDGE
(SUPERSTRUCTURE & TOWER)
W2 CAP BEAM POST-TENSIONING DETAILS NO. 10

Rev. Date: 5-18-98

ORIGINAL SCALE IN MILLIMETERS FOR REDUCED PLANS 0 10 20 30 40 50 60 70 80 90 100

CU 04
EA 0120F1

DISREGARD PRINTS BEARING EARLIER REVISION DATES →

REVISION DATES (PRELIMINARY STAGE ONLY): 05/07/99 | 05/27/01 | 01/08/02 | 01/09/02 | 12/19/02 | 10/13/05

SHEET 054R1 OF

FILE => I:\bb\04-012001\sas\contract plans and cco\cco\cco#23\aecpti0.dgn

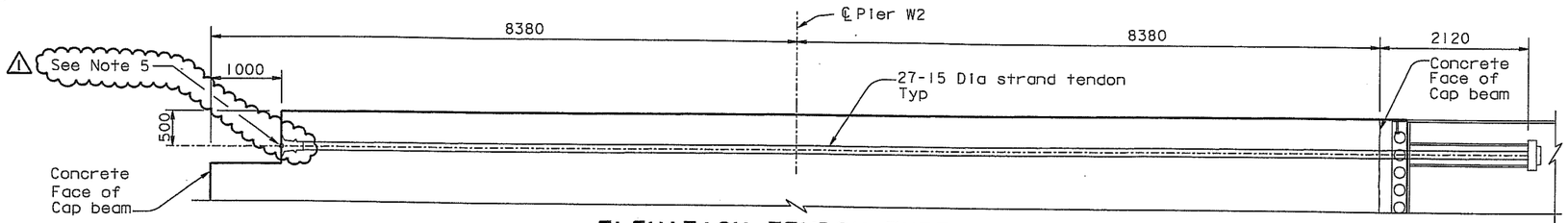

ELEVATION-TENDON TYPE 1

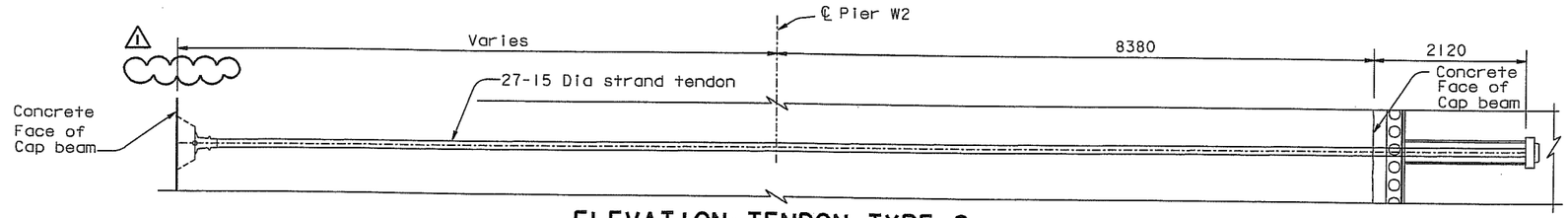

ELEVATION-TENDON TYPE 2

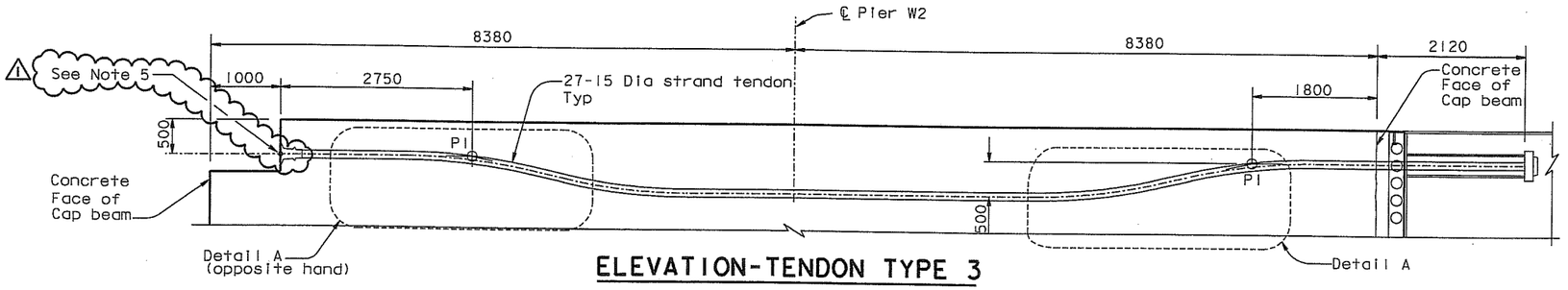

ELEVATION-TENDON TYPE 3

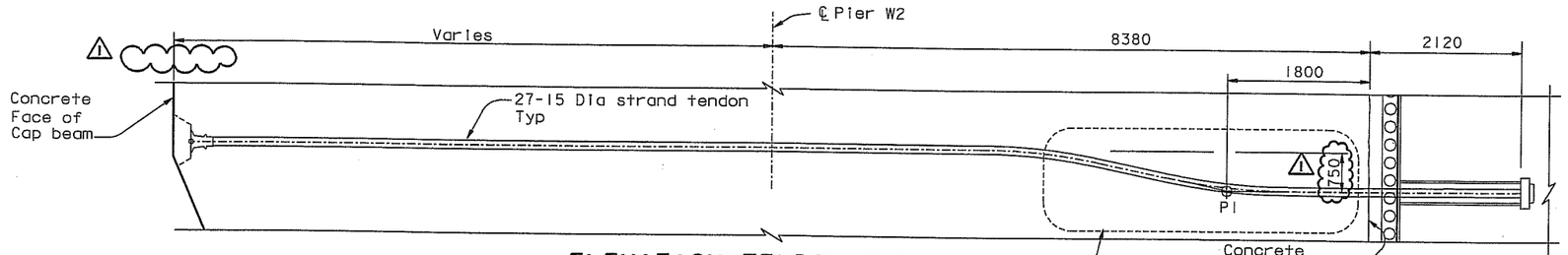

ELEVATION-TENDON TYPE 4

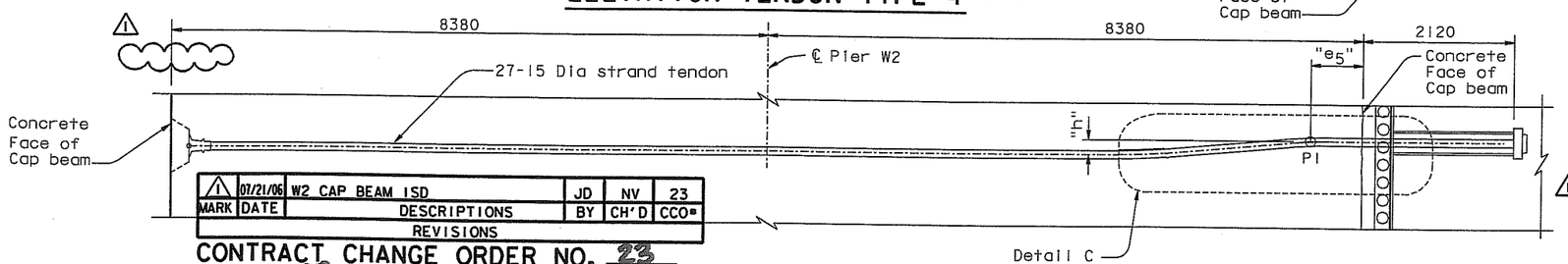

ELEVATION-TENDON TYPE 5

MARK	DATE	DESCRIPTIONS	BY	CH'D	CCO#
1	07/21/06	W2 CAP BEAM ISD	JD	NV	23
		REVISIONS			

CONTRACT CHANGE ORDER NO. 23
SHEET 23 OF 102

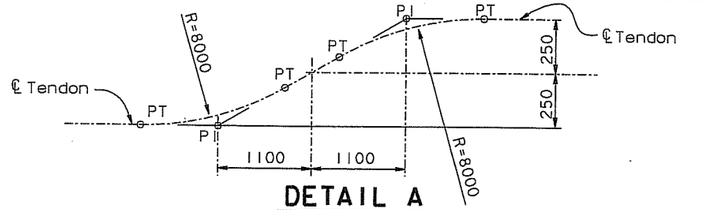

DETAIL A
NTS

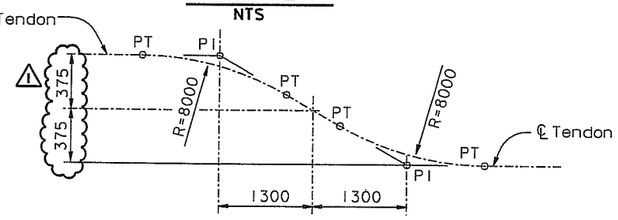

DETAIL B
NTS

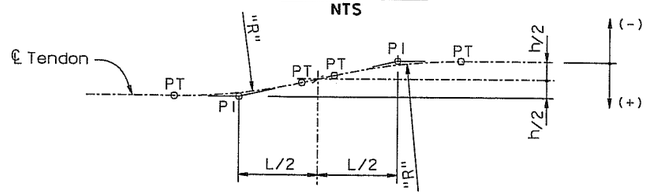

DETAIL C
NTS

NOTES:

1. For additional details, see "W2 Cap Beam Post-Tensioning Details No. 5" through "W2 Cap Beam Post-Tensioning Details No. 10" sheets.
2. For tendon type designation, see "W2 Cap Beam Post-Tensioning Details No. 12" sheet.
3. For PT blockout dimensions, see "W2 Cap Beam Blockout Details" sheets.
4. For dimension "h", "L", "e5" and "R", see "W2 Cap Beam Post-Tensioning Details No. 12" sheet.
5. Adjust vertical face to be normal to the axis of the tendon.
6. Jacking of continuity tendons shall not crush the ducts of the CBT transverse tendons. Where necessary, extra strong steel pipes (ASTM A53 Type S, Grade B, f_y=240 MPa) shall be provided together with necessary hardware connecting the steel pipes to galvanized corrugated steel duct.

100% PS&E

ALL DIMENSIONS ARE IN MILLIMETERS UNLESS OTHERWISE SHOWN

DIST.	COUNTY	ROUTE	KILOMETER POST TOTAL PROJECT	SHEET NO.	TOTAL SHEETS
04	SF	80	13.2/13.9	472RI	1204

Caltrans Metric

REGISTERED ENGINEER - CIVIL
12-6-04
PLANS APPROVAL DATE

REGISTERED PROFESSIONAL ENGINEER — John Sun — No. C 54648 — Exp. 12/31/05 — CIVIL — STATE OF CALIFORNIA

REGISTERED PROFESSIONAL ENGINEER — James P. Duxbury — No. C 64677 — Exp. 06/30/07 — CIVIL — STATE OF CALIFORNIA

FOR REVISIONS ONLY

The State of California or its officers or agents shall not be responsible for the accuracy or completeness of electronic copies of this plan sheet.

T.Y. LIN / MOFFATT & NICHOL
825 BATTERY STREET
SAN FRANCISCO, CA 94111

To get to the web site, go to: http://www.dot.ca.gov

R. Valizadeh/V. Toan/Y.L./W.L./F.C.
DESIGN OVERSIGHT
SIGN OFF DATE 07/21/06

	BY	CHECKED
DESIGN	J. Sun	M. Chen
DETAILS	J. Duxbury	M. Chen
QUANTITIES	S. Shi	D. Harrison

PREPARED FOR THE STATE OF CALIFORNIA
DEPARTMENT OF TRANSPORTATION

CHECKED
R. Manzanarez
PROJECT ENGINEER

CU 04
EA 0120F1

BRIDGE NO. 34-0006L/R
KILOMETER POST 13.2/13.9

SAN FRANCISCO OAKLAND BAY BRIDGE
EAST SPAN SEISMIC SAFETY PROJECT
SELF-ANCHORED SUSPENSION BRIDGE
(SUPERSTRUCTURE & TOWER)

W2 CAP BEAM POST-TENSIONING DETAILS NO. 11

Rev. Date: 5-18-98

ORIGINAL SCALE IN MILLIMETERS FOR REDUCED PLANS 0 10 20 30 40 50 60 70 80 90 100

DISREGARD PRINTS BEARING EARLIER REVISION DATES

REVISION DATES (PRELIMINARY STAGE ONLY): 08/07/99 | 05/24/01 | 04/08/02 | 07/01/02 | 12/19/02

SHEET 055RI OF

FILE => I:\bb\04-012001\sas\contract plans and cco\cco\cco#23\aecptii.dgn

USERNAME => vlgnatov | DATE PLOTTED => 10 MAY 2007 | TIME PLOTTED => 09:30:27

W2 CAP BEAM CONTINUITY TENDON TABLE-1 FOR "E" LINE

Tendon No.	Type	Tendon No.	Type
1A	1	24A	1
1B	2	24B	2
2A	1	25A	1
2B	5	25B	2
3A	1	26A	1
3B	5	26B	2
4A	1	27A	1
4B	5	27B	2
5A	1	28A	1
5B	2	28B	2
6A	1	29A	3
6B	5	29B	2
7A	1	30A	3
△1 7B	5	30B	(5, 9)
8A	1	31A	3
8B	2	31B	5
9A	1	32A	1
9B	2	32B	5
10A	1	33A	1
10B	2	33B	5
11A	1	34A	1
11B	2	34B	2
12A	1	35A	1
12B	2	35B	2
13A	1	36A	1
13B	2	36B	5
14A	1	37A	1
14B	2	37B	5
15A	1	38A	1
15B	(8) △1	38B	2
16A	1	39A	1
16B	(8) △1	39B	5
17A	1	40A	1
17B	2	40B	5
18A	1	41A	1
18B	(10) △1	41B	5
19A	1	42A	1
19B	4	42B	2
20A	1	43	2
20B	4	44	2
21A	1		
21B	4		
22A	1		
22B	2		
23A	1		
23B	2		

W2 CAP BEAM CONTINUITY TENDON TABLE-1 FOR "W" LINE

Tendon No.	Type	Tendon No.	Type
1A	1	24A	1
1B	2	24B	2
2A	1	25A	1
2B	5	25B	2
3A	1	26A	1
△1 3B	5	26B	(8)
4A	1	27A	1
△1 4B	5	27B	(8)
5A	1	28A	1
5B	2	28B	2
6A	1	29A	3
6B	5	29B	2
7A	1	30A	3
△1 7B	5	30B	(5, 9)
8A	1	31A	3
8B	2	31B	5
9A	1	32A	1
9B	2	32B	5
10A	1	33A	1
10B	2	33B	5
11A	1	34A	1
11B	2	34B	2
12A	1	35A	1
12B	2	35B	2
13A	1	36A	1
13B	2	36B	5
14A	1	37A	1
14B	2	37B	5
15A	1	38A	1
15B	2	38B	2
16A	1	39A	1
16B	2	39B	5
17A	1	40A	1
17B	2	40B	5
18A	1	41A	1
18B	2	41B	5
19A	1	42A	1
19B	4	42B	(6) △1
20A	1	43	2
20B	4	44	(7) △1
21A	1		
21B	(4, 8) △1		
22A	1		
22B	(4, 8) △1		
23A	1		
23B	2		

W2 CAP BEAM CONTINUITY TENDON TABLE-2 FOR "E" LINE

Tendon No.	h	L	e_5	R
2B	-40	2200	500	8000
3B	+40	2200	500	8000
4B	-70	2200	500	8000
6B	-40	2200	500	8000
7B	+40	2200	500	8000
△1 30B	(-1210)	2400	1200	(4000)
31B	-978	2400	1200	5000
32B	-763	2400	1200	4000
△1 33B	(-470)	2400	1200	8000
36B	+40	2200	500	8000
37B	-40	2200	500	8000
39B	-70	2200	500	8000
40B	+40	2200	500	8000
41B	-40	2200	500	8000

△1

Tendon No.	p
15B	-50
16B	-50
30B	+200

W2 CAP BEAM CONTINUITY TENDON TABLE-2 FOR "W" LINE

Tendon No.	h	L	e_5	R
2B	-40	2200	500	8000
3B	+40	2200	500	8000
4B	-70	2200	500	8000
6B	-40	2200	500	8000
7B	+40	2200	500	8000
△1 30B	(-1285)	-1285	1200	(4000)
31B	-1053	2400	1200	5000
32B	-795	2400	1200	5000
△1 33B	(-515)	2400	1200	8000
36B	+40	2200	500	8000
37B	-40	2200	500	8000
39B	-70	2200	500	8000
40B	+40	2200	500	8000
41B	-40	2200	500	8000

△1

Tendon No.	p
21B	+100
22B	+100
26B	-50
27B	-50
30B	-200
44	+1200

NOTES:

1. For Type 1 through Type 5 tendon geometry, see "W2 Cap Beam Post-Tensioning Details No. 11" sheet.
2. For general stressing sequence, see "Pier W2 Construction Sequence" sheet.
3. For additional prestressing details, see "Prestressing Notes" sheet.

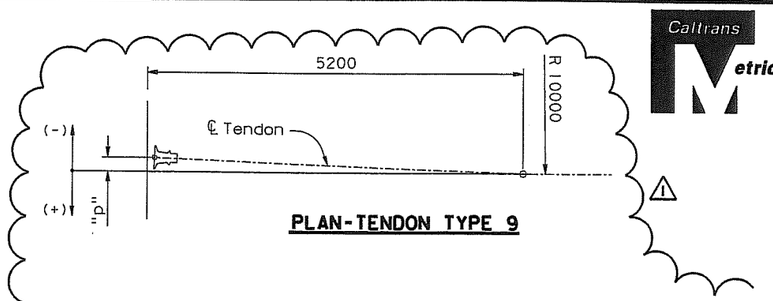

PLAN-TENDON TYPE 9

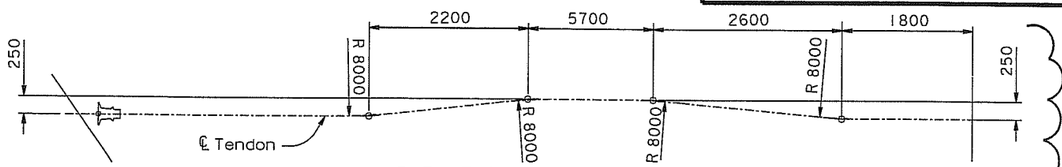

ELEVATION-TENDON TYPE 10

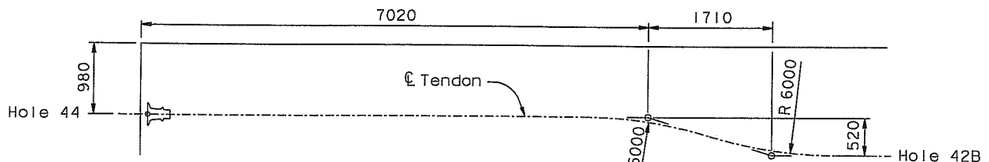

ELEVATION-TENDON TYPE 6

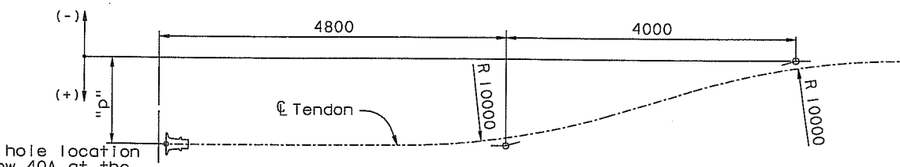

PLAN-TENDON TYPE 7

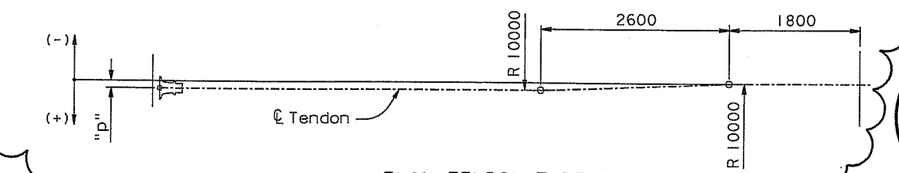

PLAN-TENDON TYPE 8

Caltrans Metric

DIST.	COUNTY	ROUTE	KILOMETER POST TOTAL PROJECT	SHEET NO.	TOTAL SHEETS
04	SF	80	13.2/13.9	473R1	1204

REGISTERED ENGINEER - CIVIL

12-6-04
PLANS APPROVAL DATE

REGISTERED PROFESSIONAL ENGINEER — John Sun — No. C 54648 — Exp. 12/31/05 — CIVIL — STATE OF CALIFORNIA

The State of California or its officers or agents shall not be responsible for the accuracy or completeness of electronic copies of this plan sheet.

T.Y. LIN / MOFFATT & NICHOL
825 BATTERY STREET
SAN FRANCISCO, CA 94111

To get to the web site, go to: http://www.dot.ca.gov

REGISTERED PROFESSIONAL ENGINEER — James P. Duxbury — No. C 64677 — Exp. 06/30/07 — CIVIL — STATE OF CALIFORNIA

FOR REVISIONS ONLY

MARK	DATE	REVISIONS	BY	CH'D	CCO#
△1	07/21/06	W2 CAP BEAM ISD	JD	NV	23

CONTRACT CHANGE ORDER NO. 23
SHEET 24 OF 102

ALL DIMENSIONS ARE IN MILLIMETERS UNLESS OTHERWISE SHOWN

R. Vallzadeh/V. Toan/Y.L./W.L./F.C.
DESIGN OVERSIGHT
SIGN OFF DATE 07/21/06

	BY	CHECKED
DESIGN	J. Sun	M. Chen
DETAILS	J. Duxbury	M. Chen
QUANTITIES	S. Shi	D. Harrison

PREPARED FOR THE STATE OF CALIFORNIA
DEPARTMENT OF TRANSPORTATION

R. Manzanarez
PROJECT ENGINEER

BRIDGE NO. 34-0006L/R
KILOMETER POST 13.2/13.9

CU 04
EA 0120F1

DISREGARD PRINTS BEARING EARLIER REVISION DATES

REVISION DATES (PRELIMINARY STAGE ONLY): 05/17/01 | 04/26/02 | 07/01/02 | 12/19/02

SHEET 056R1 OF

SAN FRANCISCO OAKLAND BAY BRIDGE
EAST SPAN SEISMIC SAFETY PROJECT
SELF-ANCHORED SUSPENSION BRIDGE
(SUPERSTRUCTURE & TOWER)

W2 CAP BEAM POST-TENSIONING DETAILS NO. 12

Rev. Date: 5-18-98

ORIGINAL SCALE IN MILLIMETERS FOR REDUCED PLANS 0 10 20 30 40 50 60 70 80 90 100

FILE => I:\bb\04-0120I\sas\contract plans and cco\cco\cco#23\aecpt12.dgn

100% PS&E

TIME PLOTTED => 09:32:23
DATE PLOTTED => 10 MAY 2007
USERNAME => vlgnatovs

DIST.	COUNTY	ROUTE	KILOMETER POST TOTAL PROJECT	SHEET NO.	TOTAL SHEETS
04	SF	80	13.2/13.9	474RI	1204

REGISTERED ENGINEER - CIVIL

12-6-04
PLANS APPROVAL DATE

REGISTERED PROFESSIONAL ENGINEER — John Sun — No. C 54648 — Exp. 12/31/05 — CIVIL — STATE OF CALIFORNIA

The State of California or its officers or agents shall not be responsible for the accuracy or completeness of electronic copies of this plan sheet.

T.Y. LIN / MOFFATT & NICHOL
825 BATTERY STREET
SAN FRANCISCO, CA 94111

Caltrans now has a web site! To get to the web site, go to: http://www.dot.ca.gov

GENERAL:

1. For "W2 Cap Beam Reinforcement Details" sheets, the Contractor shall verify all controlling field dimensions before ordering or fabricating any material. Reinforcement details reflect strict adherence to the location of pier column reinforcement defined on "Pier W2 Details No. 5" sheet.
2. Spacing dimensions are plumb unless noted otherwise.
3. Reinforcement spacing may be adjusted to avoid PT ducts if required.
4. Contractor shall adjust reinforcing to account for slope transitions, overhangs, and blockouts.
5. Contractor may adjust location of the drain inlets to avoid interference with reinforcing and/or PT ducts.
6. Post-Tensioning anchorage details reflect industry standard geometry. Actual dimensions may vary depending on supplier. It shall be the Contractor's responsibility to accommodate the actual system to the plan geometry.
7. Local confining spiral reinforcement for tendon anchors shall be provided by PT tendon hardware suppliers; not shown for clarity.
8. Contractor shall remove the corrosion protection from all reinforcing above the pier top slab prior to pouring the W2 cap beam concrete.
9. Adequate fabrication and placement of all permanently embedded items may require more stringent tolerances than ordinary industry standards. It shall be the Contractor's responsibility to ascertain the adequate fabrication and placement of all permanently embedded items within the geometric constraints of the plans.

CROSS-REFERENCES:

1. For tie-down cable top access slab reinforcement details, see "Cable Tie-Down Details" sheets.
2. For bikepath connection details, see "Bikepath Details" sheets.
3. For blockout reinforcement, see "W2 Cap Beam Blockout Details" sheets.
4. For epoxy AC overlay limits, see "W2 Cap Beam Reinforcement Details No. 49" sheet.
5. For jacking frame blocking, see "West Jacking Frame Details" sheets.
6. For layer identification, see "W2 Cap Beam Reinforcement Details No. 6, No. 16, No. 22 and No. 25" sheets.

DETAILS:

1. All reinforcing steel shall be ASTM A706, Grade 420.
2. Typical clear cover to skin reinforcement is 80 mm.
3. At locations where reinforcement is cut to clear embeds, PT and blockouts, the typical clearance is 80 mm.
4. Non-Contact Splice:
   a. Max non-contact lap splice=150 mm 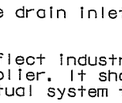

   b. Min lap length for #19 = 500 mm
   c. Min lap length for #25 = 1100 mm
   d. Min lap length for #29 = 1500 mm
5. Locations of bar lap splices and/or mechanical splices not shown for clarity; splices in adjacent reinforcement shall be staggered.
6. At the Contractor's option, lapped reinforcement shown on the plans may be substituted with continuous reinforcement.

REINFORCEMENT INDEX:

1. For top mat reinforcement, see "W2 Cap Beam Reinforcement Details No. 2 to No. 8" sheets.
2. For bottom mat reinforcement, see "W2 Cap Beam Reinforcement Details No. 9 to No. 18" sheets.
3. For transverse reinforcement, see "W2 Cap Beam Reinforcement Details No. 19 to No. 25" sheets.
4. For diaphragm reinforcement, see "W2 Cap Beam Reinforcement Details No. 26 to No. 29" sheets.
5. For jacking saddle reinforcement, see "W2 Cap Beam Reinforcement Details No. 30 to No. 33" sheets.
6. For skin reinforcement, see "W2 Cap Beam Reinforcement Details No. 34 to No. 39" sheets.
7. For horizontal and vertical stirrup reinforcement, see "W2 Cap Beam Reinforcement Details No. 40 to No. 43" sheets.
8. For column region reinforcement, see "W2 Cap Beam Reinforcement Details No. 44 to No. 47" sheets.
9. For miscellaneous reinforcement, see "W2 Cap Beam Reinforcement Details No. 48 to No. 49" sheets.
10. For barlist and schedules, see "W2 Cap Beam Reinforcement Details No. 50 to No. 52" sheets.

BARLIST SCHEDULES:

Barlist schedules are provided for general guidance, and shall not be used as a basis for quantity estimates. Information provided in "W2 Cap Beam Reinforcement Details" sheets and "W2 Cap Beam Blockout Details" sheets shall govern the Barlist schedules. The Contractor shall reference these plans to develop barlist schedules for quantity estimation. Barlist schedules shall not be used for fabrication purposes. Final weights, lengths, and geometries shall be the responsibility of the Contractor.

KEY TO BAR NOMENCLATURE:

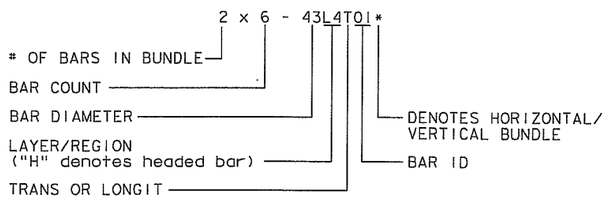

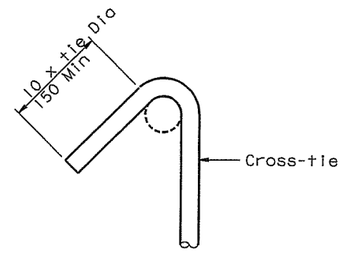

135° SEISMIC TIE HOOK

No scale

LEGEND:

- Denotes headed bar reinforcement
- Denotes opening
- Symmetric

ABBREVIATIONS

ES	Each Side
Longit	Longitudinal
Nom	Nominal
Opp	Opposite
Spa	Spaces
Trans	Transverse
Var	Varies
UNO	Unless Noted Otherwise

REGISTERED PROFESSIONAL ENGINEER — James P. Duxbury — No. C 64677 — Exp. 06/30/07 — CIVIL — STATE OF CALIFORNIA

FOR REVISIONS ONLY

MARK	DATE	REVISIONS	BY	CH'D	CCO#
1	07/21/06	W2 CAP BEAM ISD	JD	AS	23

CONTRACT CHANGE ORDER NO. 23
SHEET 25 OF 102

ALL DIMENSIONS ARE IN MILLIMETERS UNLESS OTHERWISE SHOWN

Original Sheet Superseded

R. Vaziadeh/V. Toan/Y.L./W.L./F.C.
DESIGN OVERSIGHT
SIGN OFF DATE 07/21/06

	BY	CHECKED
DESIGN	J. Sun	M. Chen
DETAILS	J. Duxbury	M. Chen
QUANTITIES	S. Shi	D. Harrison

PREPARED FOR THE STATE OF CALIFORNIA DEPARTMENT OF TRANSPORTATION

R. Manzanarez
PROJECT ENGINEER

BRIDGE NO.	34-0006L/R
KILOMETER POST	13.2/13.9

SAN FRANCISCO OAKLAND BAY BRIDGE
EAST SPAN SEISMIC SAFETY PROJECT
SELF-ANCHORED SUSPENSION BRIDGE (SUPERSTRUCTURE & TOWER)

W2 CAP BEAM REINFORCEMENT DETAILS NO. 1

Rev. Date: 5-18-98

ORIGINAL SCALE IN MILLIMETERS FOR REDUCED PLANS 0 10 20 30 40 50 60 70 80 90 100

CU 04
EA 0120F1

DISREGARD PRINTS BEARING EARLIER REVISION DATES

REVISION DATES (PRELIMINARY STAGE ONLY)										SHEET	OF
05/07/99	05/27/01	01/30/02	07/01/02	12/19/02						057RI	

FILE => I:\bb\04-0120I\sas\contract plans and cco\cco\cco#23\dgn\aecap01r-c.dgn

USERNAME => ptom
DATE PLOTTED => 07 JUN 2007
TIME PLOTTED => 15:06:57

MARK	DATE	DESCRIPTIONS	BY	CH'D	CCO#
1	07/21/06	W2 CAP BEAM ISD	JD	AS	23

REVISIONS

CONTRACT CHANGE ORDER NO. 23
SHEET 26 OF 102

FOR REVISIONS ONLY

REGISTERED PROFESSIONAL ENGINEER — James P. Duxbury — No. C 64677 — Exp. 06/30/07 — CIVIL — STATE OF CALIFORNIA

NOTES:

1. For Section A-A and B-B, see "W2 Cap Beam Reinforcement Details No.6" sheet.
2. For Section C-C thru E-E, see "W2 Cap Beam Reinforcement Details No.7" sheet.
3. For Section F-F, see "W2 Cap Beam Reinforcement Details No.8" sheet.

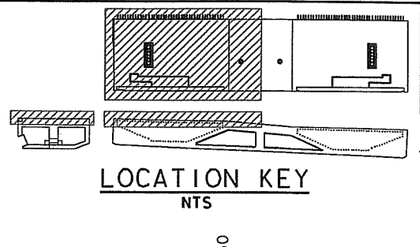

LOCATION KEY
NTS

Caltrans Metric

DIST.	COUNTY	ROUTE	KILOMETER POST TOTAL PROJECT	SHEET NO.	TOTAL SHEETS
04	SF	80	13.2/13.9	475RI	1204

REGISTERED ENGINEER - CIVIL

REGISTERED PROFESSIONAL ENGINEER — John Sun — No. C 54648 — Exp. 12/31/05 — CIVIL — STATE OF CALIFORNIA

12-6-04
PLANS APPROVAL DATE

The State of California or its officers or agents shall not be responsible for the accuracy or completeness of electronic copies of this plan sheet.

T.Y. LIN / MOFFATT & NICHOL
825 BATTERY STREET
SAN FRANCISCO, CA 94111

To get to the web site, go to: http://www.dot.ca.gov

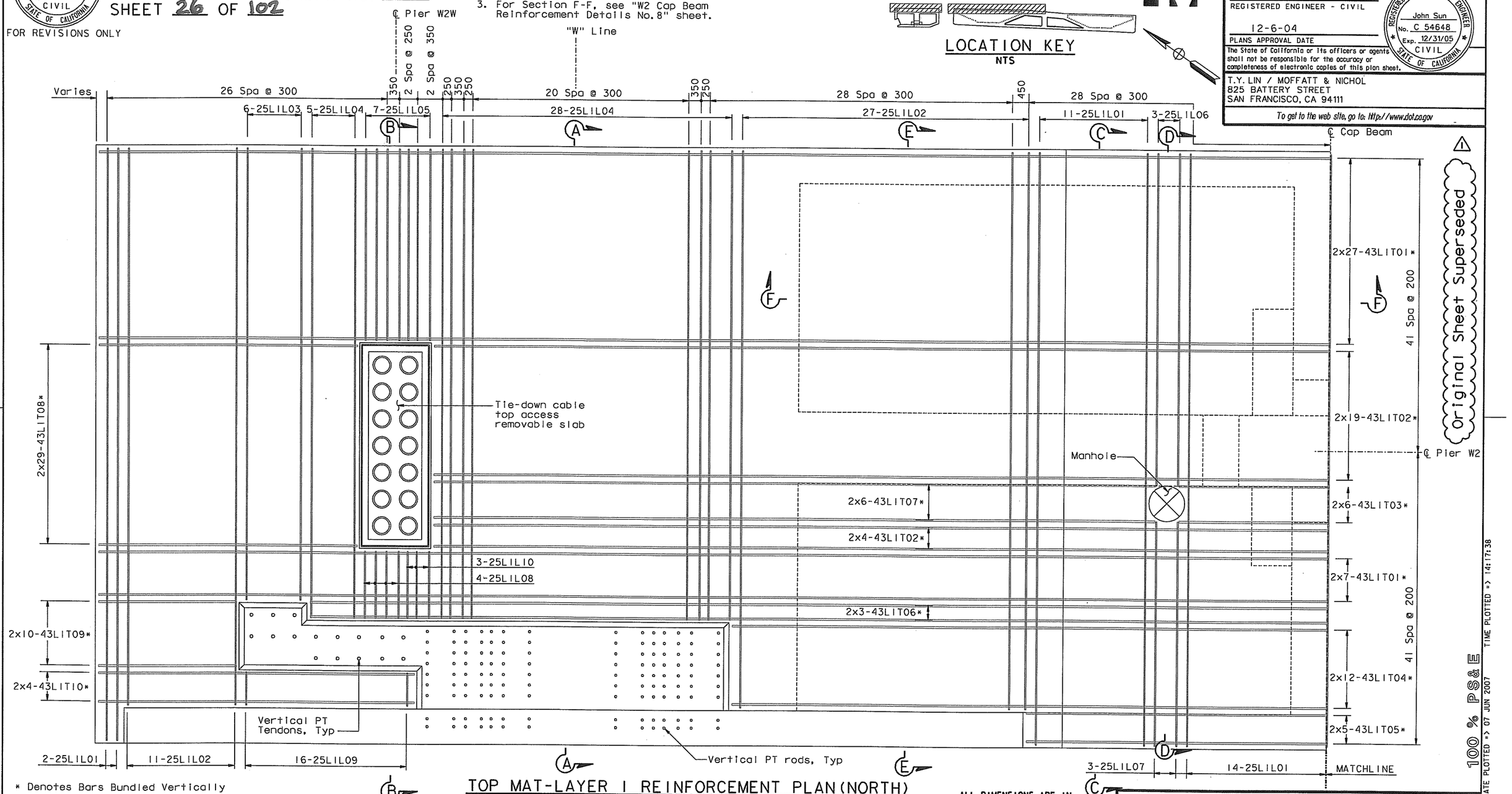

* Denotes Bars Bundled Vertically

TOP MAT-LAYER 1 REINFORCEMENT PLAN (NORTH)

1:50

ALL DIMENSIONS ARE IN MILLIMETERS UNLESS OTHERWISE SHOWN

Original Sheet Superseded

100 % PS&E

DATE PLOTTED => 07 JUN 2007
TIME PLOTTED => 14:17:38
USERNAME => ptom

R. Vallzadeh/V. Toan/Y.L./W.L./F.C.
DESIGN OVERSIGHT
SIGN OFF DATE 07/21/06

	BY	CHECKED
DESIGN	J. Sun	M. Chen
DETAILS	J. Duxbury	M. Chen
QUANTITIES	S. Shi	D. Harrison

PREPARED FOR THE STATE OF CALIFORNIA
DEPARTMENT OF TRANSPORTATION

R. Manzanarez
PROJECT ENGINEER

BRIDGE NO. 34-0006L/R
KILOMETER POST 13.2/13.9

SAN FRANCISCO OAKLAND BAY BRIDGE
EAST SPAN SEISMIC SAFETY PROJECT
SELF-ANCHORED SUSPENSION BRIDGE (SUPERSTRUCTURE & TOWER)

W2 CAP BEAM REINFORCEMENT DETAILS NO. 2

Rev. Date: 5-18-98

ORIGINAL SCALE IN MILLIMETERS FOR REDUCED PLANS 0 10 20 30 40 50 60 70 80 90 100

CU 04
EA 0120F1

DISREGARD PRINTS BEARING EARLIER REVISION DATES

REVISION DATES (PRELIMINARY STAGE ONLY): 05/31/01 | 09/28/01 | 07/30/02 | 12/19/02

SHEET 058RI OF

FILE => I:\bb\04-012001\sas\contract plans and cco\cco\cco#23\dgn\aecap02r-c.dgn

MARK	DATE	DESCRIPTIONS	BY	CH'D	CCO#
1	07/21/06	W2 CAP BEAM ISD	JD	AS	23

REVISIONS

CONTRACT CHANGE ORDER NO. 23
SHEET 27 OF 102

FOR REVISIONS ONLY

NOTES:

1. For Section G-G, see "W2 Cap Beam Reinforcement Details No. 8" sheet.

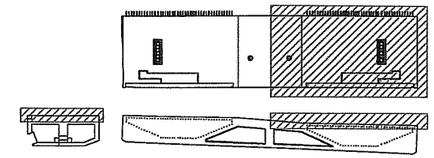

LOCATION KEY
NTS

DIST.	COUNTY	ROUTE	KILOMETER POST TOTAL PROJECT	SHEET NO.	TOTAL SHEETS
04	SF	80	13.2/13.9	476R1	1204

REGISTERED ENGINEER - CIVIL
12-6-04
PLANS APPROVAL DATE

The State of California or its officers or agents shall not be responsible for the accuracy or completeness of electronic copies of this plan sheet.

T.Y. LIN / MOFFATT & NICHOL
825 BATTERY STREET
SAN FRANCISCO, CA 94111

To get to the web site, go to: http://www.dot.ca.gov

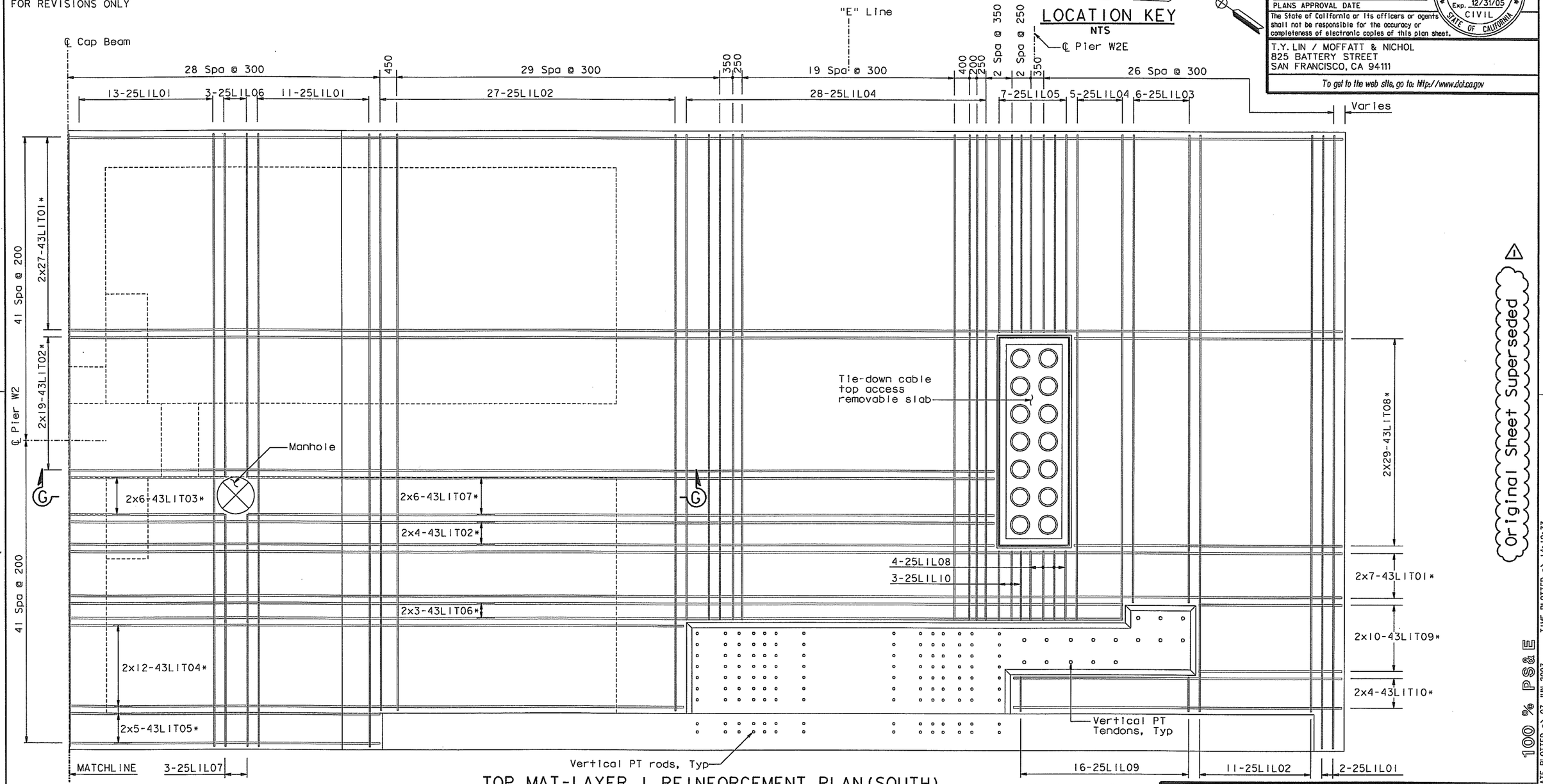

* Denotes Bars Bundled Vertically

TOP MAT-LAYER 1 REINFORCEMENT PLAN (SOUTH)
1:50

ALL DIMENSIONS ARE IN MILLIMETERS UNLESS OTHERWISE SHOWN

Original Sheet Superseded

100 % PS&E

SAN FRANCISCO OAKLAND BAY BRIDGE
EAST SPAN SEISMIC SAFETY PROJECT
SELF-ANCHORED SUSPENSION BRIDGE
(SUPERSTRUCTURE & TOWER)

W2 CAP BEAM REINFORCEMENT DETAILS NO. 3

R. Valizadeh/V. Toan/Y.L./W.L./F.C.
DESIGN OVERSIGHT
SIGN OFF DATE 07/21/06

	BY	CHECKED
DESIGN	J. Sun	M. Chen
DETAILS	J. Duxbury	M. Chen
QUANTITIES	S. Shi	D. Harrison

PREPARED FOR THE STATE OF CALIFORNIA DEPARTMENT OF TRANSPORTATION

R. Manzanarez
PROJECT ENGINEER

BRIDGE NO. 34-0006L/R
KILOMETER POST 13.2/13.9

Rev. Date: 5-18-98

ORIGINAL SCALE IN MILLIMETERS FOR REDUCED PLANS 0 10 20 30 40 50 60 70 80 90 100

CU 04
EA 0120F1

DISREGARD PRINTS BEARING EARLIER REVISION DATES

REVISION DATES (PRELIMINARY STAGE ONLY) 05/31/01 04/08/02 07/01/02 12/19/02

SHEET 059R1 OF

FILE => I:\bb\04-012001\sas\contract plans and cco\cco\cco#23\dgn\aecap03r-c.dgn

USERNAME => ptam DATE PLOTTED => 07 JUN 2007 TIME PLOTTED => 14:19:33

MARK	DATE	DESCRIPTIONS	BY	CH'D	CCO#
1	07/21/06	W2 CAP BEAM ISD	JD	AS	23

REVISIONS

CONTRACT CHANGE ORDER NO. 23
SHEET 28 OF 102

FOR REVISIONS ONLY

REGISTERED PROFESSIONAL ENGINEER James P. Duxbury No. C 64677 Exp. 06/30/07 CIVIL STATE OF CALIFORNIA

NOTES:

1. For Section A-A and B-B, see "W2 Cap Beam Reinforcement Details No.6" sheet.
2. For Section C-C thru E-E, see "W2 Cap Beam Reinforcement Details No.7" sheet.
3. For Section F-F, see "W2 Cap Beam Reinforcement Details No.8" sheet.
4. High bar of vertical bundle is a thru bar. Low bar terminates at continuity tendon 42B.

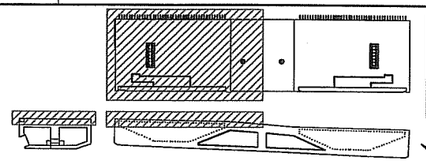

LOCATION KEY
NTS

Caltrans Metric

DIST.	COUNTY	ROUTE	KILOMETER POST TOTAL PROJECT	SHEET NO.	TOTAL SHEETS
04	SF	80	13.2/13.9	477R1	1204

REGISTERED ENGINEER - CIVIL

12-6-04
PLANS APPROVAL DATE

REGISTERED PROFESSIONAL ENGINEER John Sun No. C 54648 Exp. 12/31/05 CIVIL STATE OF CALIFORNIA

The State of California or its officers or agents shall not be responsible for the accuracy or completeness of electronic copies of this plan sheet.

T.Y. LIN / MOFFATT & NICHOL
825 BATTERY STREET
SAN FRANCISCO, CA 94111

To get to the web site, go to: http://www.dot.ca.gov

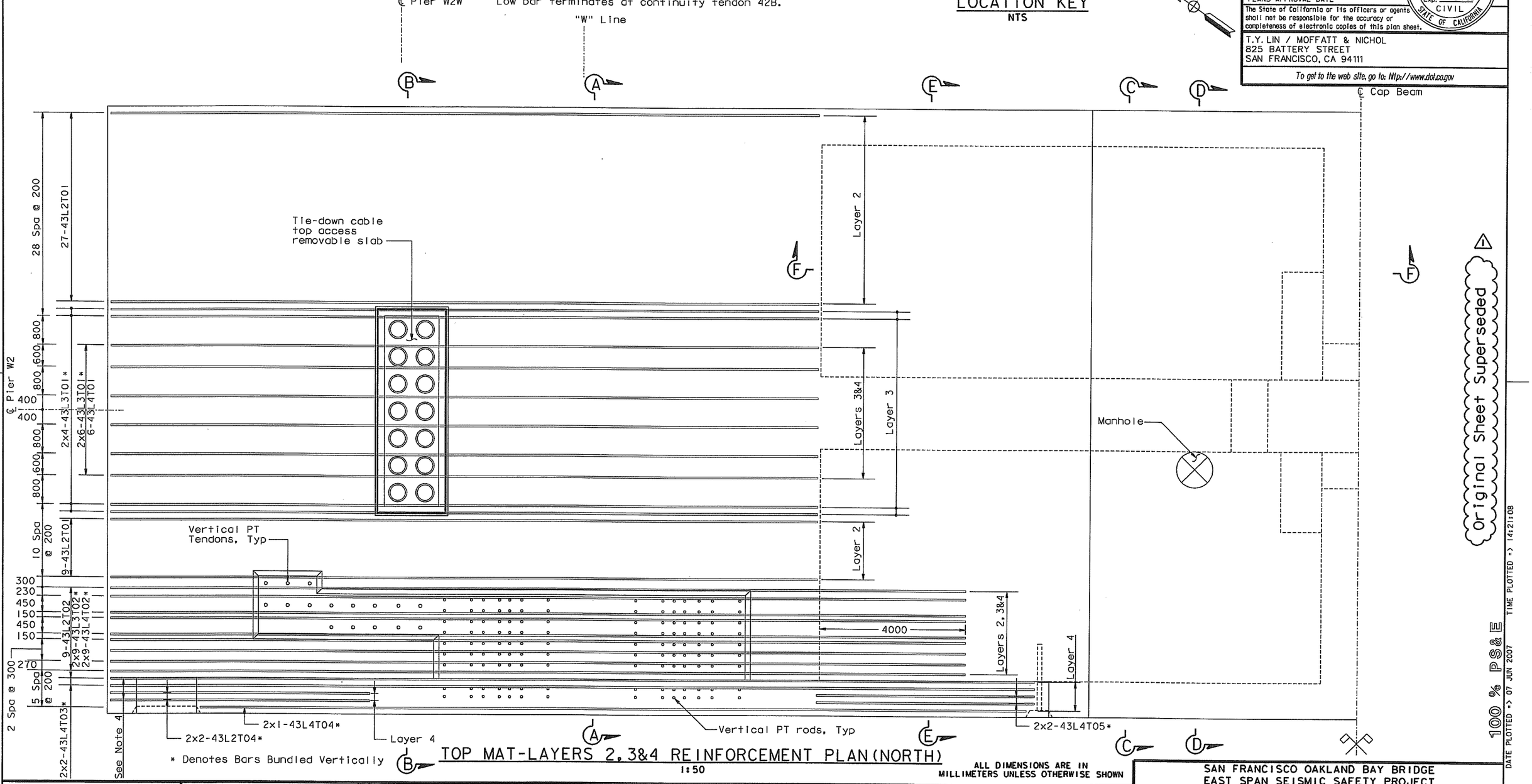

* Denotes Bars Bundled Vertically

TOP MAT-LAYERS 2, 3&4 REINFORCEMENT PLAN (NORTH)
1:50

ALL DIMENSIONS ARE IN MILLIMETERS UNLESS OTHERWISE SHOWN

Original Sheet Superseded

100 % PS&E

DATE PLOTTED => 07 JUN 2007 TIME PLOTTED => 14:21:08

USERNAME => ptom

R. Valizadeh/V. Toan/Y.L./W.L./F.C.
DESIGN OVERSIGHT
Roger Valizadeh / Vong Toan / Y. Liu
SIGN OFF DATE 07/21/06

Rev. Date: 5-18-98

	BY	CHECKED
DESIGN	J. Sun	M. Chen
DETAILS	J. Duxbury	M. Chen
QUANTITIES	S. Shi	D. Harrison

PREPARED FOR THE STATE OF CALIFORNIA DEPARTMENT OF TRANSPORTATION

R. Manzanarez
PROJECT ENGINEER

BRIDGE NO. 34-0006L/R
KILOMETER POST 13.2/13.9

SAN FRANCISCO OAKLAND BAY BRIDGE
EAST SPAN SEISMIC SAFETY PROJECT
SELF-ANCHORED SUSPENSION BRIDGE
(SUPERSTRUCTURE & TOWER)

W2 CAP BEAM REINFORCEMENT DETAILS NO. 4

ORIGINAL SCALE IN MILLIMETERS FOR REDUCED PLANS 0 10 20 30 40 50 60 70 80 90 100

CU 04
EA 0120F1

DISREGARD PRINTS BEARING EARLIER REVISION DATES

REVISION DATES (PRELIMINARY STAGE ONLY) 05/31/01 04/08/02 07/01/02 12/19/02

SHEET 060R1 OF

FILE => I:\bb\04-012001\sas\contract plans and cco\cco\cco#23\dgn\aecap04r-c.dgn

MARK	DATE	DESCRIPTIONS	BY	CH'D	CCO#
1	07/21/06	W2 CAP BEAM ISD	JD	AS	23

REVISIONS

CONTRACT CHANGE ORDER NO. 23
SHEET 29 OF 102

FOR REVISIONS ONLY

NOTES:
1. For Section C-C thru E-E, see "W2 Cap Beam Reinforcement Details No.7" sheet.
2. For Section F-F, see "W2 Cap Beam Reinforcement Details No.8" sheet.

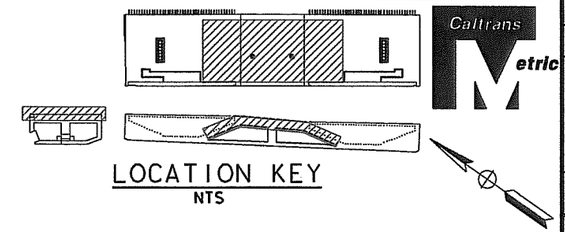

LOCATION KEY
NTS

DIST.	COUNTY	ROUTE	KILOMETER POST TOTAL PROJECT	SHEET NO.	TOTAL SHEETS
04	SF	80	13.2/13.9	478R1	1204

REGISTERED ENGINEER - CIVIL
12-6-04
PLANS APPROVAL DATE

The State of California or its officers or agents shall not be responsible for the accuracy or completeness of electronic copies of this plan sheet.

T.Y. LIN / MOFFATT & NICHOL
825 BATTERY STREET
SAN FRANCISCO, CA 94111

To get to the web site, go to: http://www.dot.ca.gov

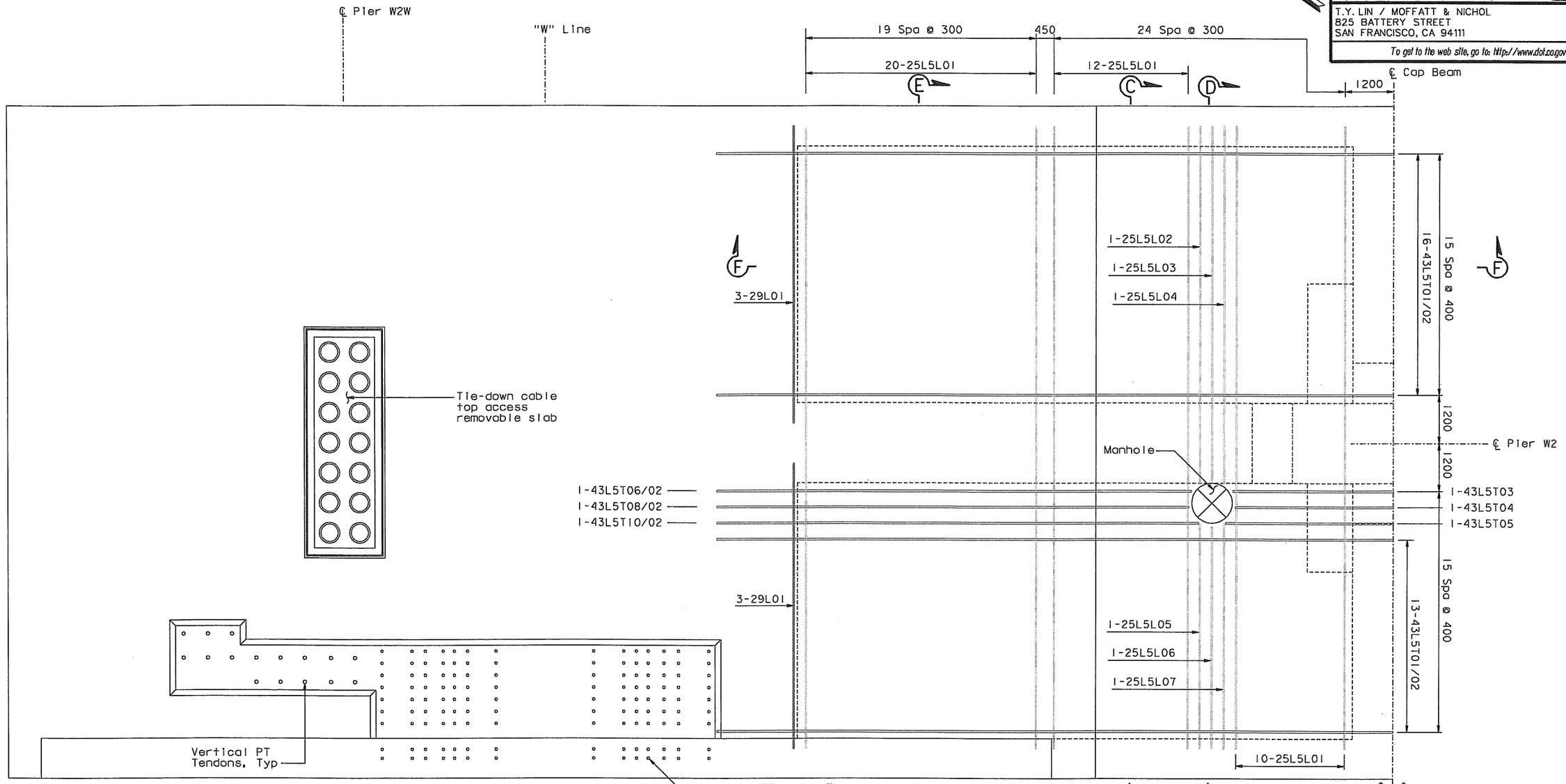

TOP MAT-LAYER 5 REINFORCEMENT PLAN AT VOID(NORTH)
1:50

ALL DIMENSIONS ARE IN MILLIMETERS UNLESS OTHERWISE SHOWN

Original Sheet Superseded

100 % PS&E

DATE PLOTTED => 07 JUN 2007 TIME PLOTTED => 14:22:17

USERNAME => ptom

SAN FRANCISCO OAKLAND BAY BRIDGE
EAST SPAN SEISMIC SAFETY PROJECT
SELF-ANCHORED SUSPENSION BRIDGE
(SUPERSTRUCTURE & TOWER)

W2 CAP BEAM REINFORCEMENT DETAILS NO.5

R. Valizadeh/V. Toan/Y.L./W.L./F.C.
DESIGN OVERSIGHT
SIGN OFF DATE 07/21/06

	BY	CHECKED
DESIGN	J. Sun	M. Chen
DETAILS	J. Duxbury	M. Chen
QUANTITIES	S. Shi	D. Harrison

PREPARED FOR THE STATE OF CALIFORNIA DEPARTMENT OF TRANSPORTATION

R. Manzanarez
PROJECT ENGINEER

BRIDGE NO. 34-0006L/R
KILOMETER POST 13.2/13.9

Rev. Date: 5-18-98

ORIGINAL SCALE IN MILLIMETERS FOR REDUCED PLANS 0 10 20 30 40 50 60 70 80 90 100

CU 04
EA 0120F1

DISREGARD PRINTS BEARING EARLIER REVISION DATES

REVISION DATES (PRELIMINARY STAGE ONLY) 05/31/01 04/02/02 07/07/02 12/19/02

SHEET 061R1 OF

FILE => I:\bb\04-012001\sas\contract plans and cco\cco\cco#23\dgn\aecap05r-c.dgn

MARK	DATE	DESCRIPTIONS	BY	CH'D	CCO#
1	07/21/06	W2 CAP BEAM ISD	JD	AS	23

REVISIONS

CONTRACT CHANGE ORDER NO. 23
SHEET 30 OF 102

FOR REVISIONS ONLY

REGISTERED PROFESSIONAL ENGINEER
James P. Duxbury
No. C 64677
Exp. 06/30/07
CIVIL
STATE OF CALIFORNIA

NOTES:

1. East face and West face reinforcement not shown for clarity. See "W2 Cap Beam Reinforcement Details No. 19 to No. 25" sheets.
2. Vertical and horizontal stirrup reinforcement not shown for clarity. See "W2 Cap Beam Reinforcement Details No. 40 to No. 43" sheets.
3. Layer dimensions shown center-to-center of reinforcement.

Caltrans Metric

DIST.	COUNTY	ROUTE	KILOMETER POST TOTAL PROJECT	SHEET NO.	TOTAL SHEETS
04	SF	80	13.2/13.9	479R1	1204

REGISTERED ENGINEER - CIVIL

12-6-04
PLANS APPROVAL DATE

REGISTERED PROFESSIONAL ENGINEER
John Sun
No. C 54648
Exp. 12/31/05
CIVIL
STATE OF CALIFORNIA

The State of California or its officers or agents shall not be responsible for the accuracy or completeness of electronic copies of this plan sheet.

T.Y. LIN / MOFFATT & NICHOL
825 BATTERY STREET
SAN FRANCISCO, CA 94111

To get to the web site, go to: http://www.dot.ca.gov

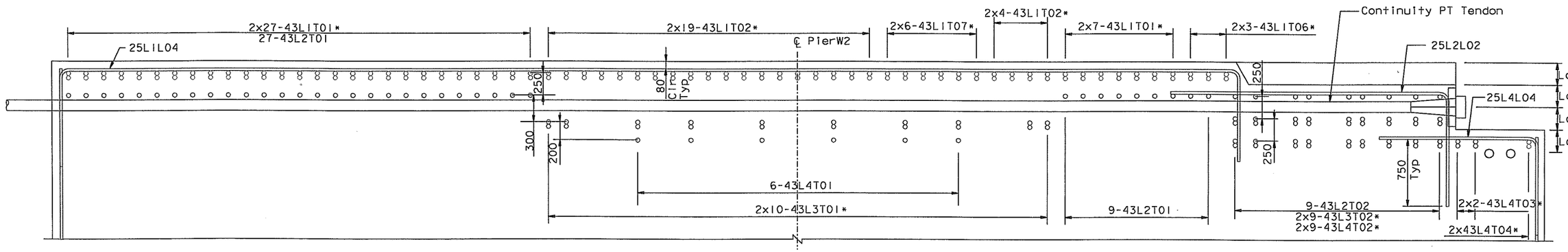

SECTION A-A

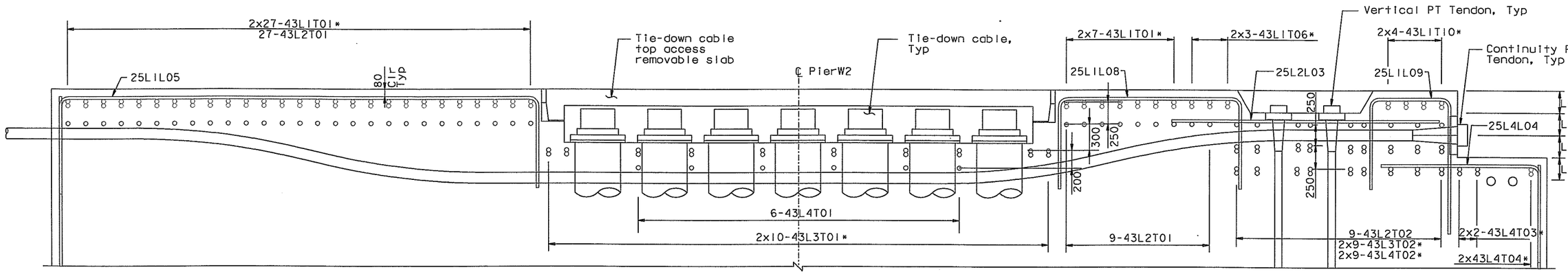

SECTION B-B

TOP MAT REINFORCEMENT
(North Side shown, South Side similar)
NTS

ALL DIMENSIONS ARE IN MILLIMETERS UNLESS OTHERWISE SHOWN

Original Sheet Superseded

100% PS&E

DATE PLOTTED => 07 JUN 2007 TIME PLOTTED => 14:23:32

USERNAME => ptom

R. Valizadeh/V. Toan/Y.L./W.L./F.C.
DESIGN OVERSIGHT
Reza Valizadeh / Vong Toan / Y. Liu
SIGN OFF DATE 07/21/06

Rev. Date: 5-18-98

	BY	CHECKED
DESIGN	J. Sun	M. Chen
DETAILS	J. Duxbury	M. Chen
QUANTITIES	S. Shi	D. Harrison

ORIGINAL SCALE IN MILLIMETERS FOR REDUCED PLANS 0 10 20 30 40 50 60 70 80 90 100

PREPARED FOR THE STATE OF CALIFORNIA DEPARTMENT OF TRANSPORTATION

R. Manzanarez
PROJECT ENGINEER

BRIDGE NO. 34-0006L/R
KILOMETER POST 13.2/13.9

CU 04
EA 0120F1

DISREGARD PRINTS BEARING EARLIER REVISION DATES

REVISION DATES (PRELIMINARY STAGE ONLY) 05/31/01 04/08/02 07/01/02 12/19/02

SAN FRANCISCO OAKLAND BAY BRIDGE
EAST SPAN SEISMIC SAFETY PROJECT
SELF-ANCHORED SUSPENSION BRIDGE
(SUPERSTRUCTURE & TOWER)

W2 CAP BEAM REINFORCEMENT DETAILS NO. 6

SHEET 062R1 OF

FILE => I:\bb\04-012001\sas\contract plans and cco\cco\cco#23\dgn\aecap06r-c.dgn

MARK	DATE	DESCRIPTIONS	BY	CH'D	CCO#
1	07/21/06	W2 CAP BEAM ISD	JD	AS	23

REVISIONS

CONTRACT CHANGE ORDER NO. 23
SHEET 31 OF 102

FOR REVISIONS ONLY

REGISTERED PROFESSIONAL ENGINEER James P. Duxbury No. C 64677 Exp. 06/30/07 CIVIL STATE OF CALIFORNIA

Caltrans Metric

DIST.	COUNTY	ROUTE	KILOMETER POST TOTAL PROJECT	SHEET NO.	TOTAL SHEETS
04	SF	80	13.2/13.9	480R1	1204

REGISTERED ENGINEER - CIVIL

12-6-04
PLANS APPROVAL DATE

REGISTERED PROFESSIONAL ENGINEER John Sun No. C 54648 Exp. 12/31/05 CIVIL STATE OF CALIFORNIA

The State of California or its officers or agents shall not be responsible for the accuracy or completeness of electronic copies of this plan sheet.

T.Y. LIN / MOFFATT & NICHOL
825 BATTERY STREET
SAN FRANCISCO, CA 94111

To get to the web site, go to: http://www.dot.ca.gov

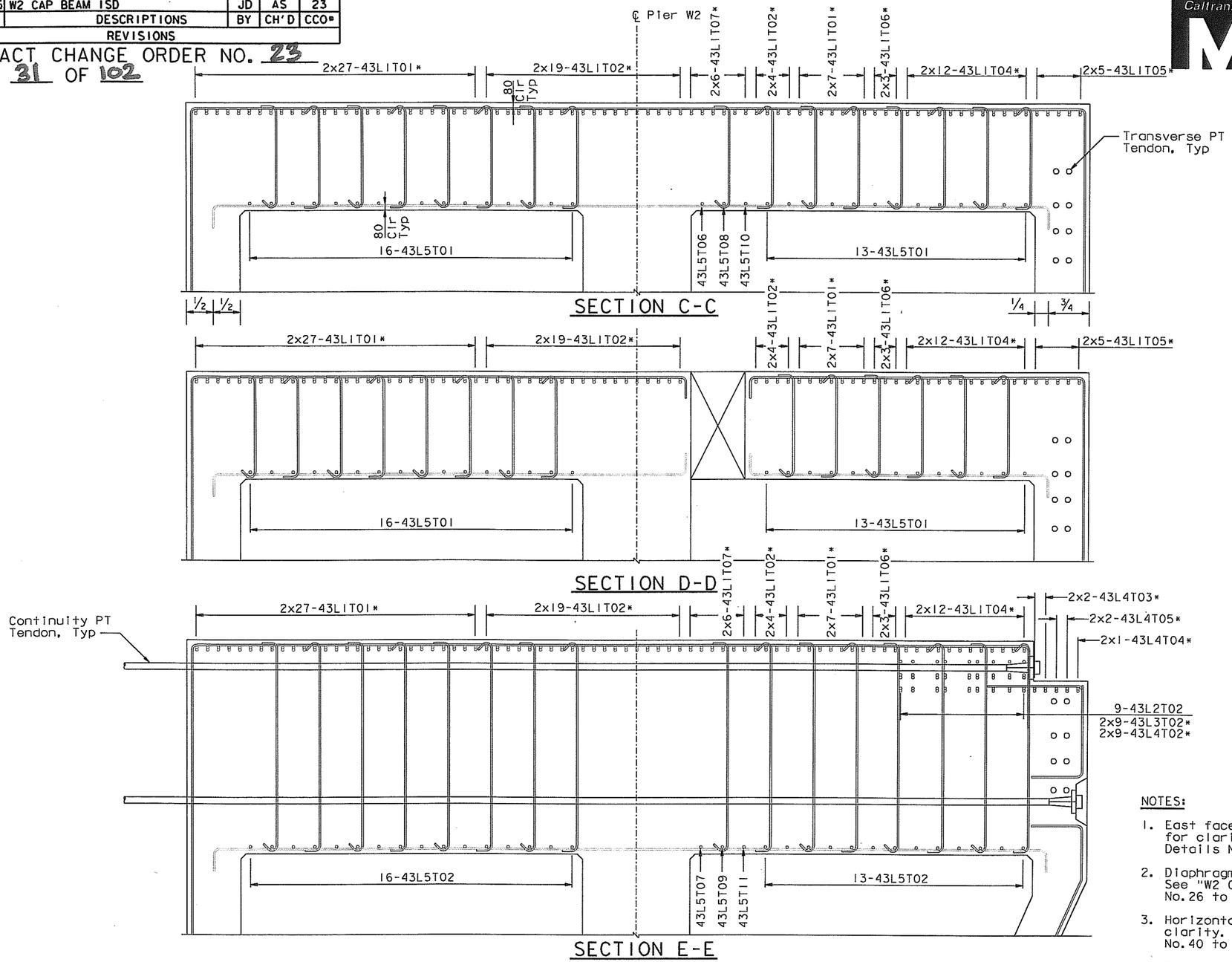

* Denotes Bars Bundled Vertically

TOP MAT REINFORCEMENT
(North Side shown, South Side similar)
NTS

NOTES:

1. East face and West face reinforcement not shown for clarity. See "W2 Cap Beam Reinforcement Details No. 19 to No. 25" sheets.
2. Diaphragm reinforcement not shown for clarity. See "W2 Cap Beam Reinforcement Details No. 26 to No. 29" sheets.
3. Horizontal stirrup reinforcement not shown for clarity. See "W2 Cap Beam Reinforcement Details No. 40 to No. 43" sheets.
4. For Top Slab Stirrup Plan, see "W2 Cap Beam Reinforcement Details No. 8" sheet.

Original Sheet Superseded

100 % PS&E

ALL DIMENSIONS ARE IN MILLIMETERS UNLESS OTHERWISE SHOWN

SAN FRANCISCO OAKLAND BAY BRIDGE
EAST SPAN SEISMIC SAFETY PROJECT
SELF-ANCHORED SUSPENSION BRIDGE
(SUPERSTRUCTURE & TOWER)

W2 CAP BEAM REINFORCEMENT DETAILS NO. 7

R. Valizadeh/V. Toan/Y.L./W.L./F.C.
DESIGN OVERSIGHT
SIGN OFF DATE 07/21/06

	BY	CHECKED
DESIGN	J. Sun	M. Chen
DETAILS	J. Duxbury	M. Chen
QUANTITIES	S. Shi	D. Harrison

PREPARED FOR THE STATE OF CALIFORNIA DEPARTMENT OF TRANSPORTATION

R. Manzanarez
PROJECT ENGINEER

BRIDGE NO. 34-0006L/R
KILOMETER POST 13.2/13.9

Rev. Date: 5-18-98

ORIGINAL SCALE IN MILLIMETERS FOR REDUCED PLANS 0 10 20 30 40 50 60 70 80 90 100

CU 04
EA 0120F1

DISREGARD PRINTS BEARING EARLIER REVISION DATES

REVISION DATES (PRELIMINARY STAGE ONLY) 05/31/01 04/08/02 07/01/02 12/19/02

SHEET 063R1 OF

FILE => I:\bb\04-012001\sas\contract plans and cco\cco\cco#23\dgn\aecap07r-c.dgn

USERNAME => ptom DATE PLOTTED => 07 JUN 2007 TIME PLOTTED => 14:25:21

DIST.	COUNTY	ROUTE	KILOMETER POST TOTAL PROJECT	SHEET NO.	TOTAL SHEETS
04	SF	80	13.2/13.9	481R1	1204

REGISTERED ENGINEER - CIVIL

12-6-04
PLANS APPROVAL DATE

The State of California or its officers or agents shall not be responsible for the accuracy or completeness of electronic copies of this plan sheet.

T.Y. LIN / MOFFATT & NICHOL
825 BATTERY STREET
SAN FRANCISCO, CA 94111

To get to the web site, go to: http://www.dot.ca.gov

REGISTERED PROFESSIONAL ENGINEER James P. Duxbury No. C 64677 Exp. 06/30/07 CIVIL STATE OF CALIFORNIA

FOR REVISIONS ONLY

Caltrans Metric

MARK	DATE	DESCRIPTIONS	BY	CH'D	CCO#
1	07/21/06	W2 CAP BEAM ISD	JD	AS	23

REVISIONS

CONTRACT CHANGE ORDER NO. 23
SHEET 32 OF 102

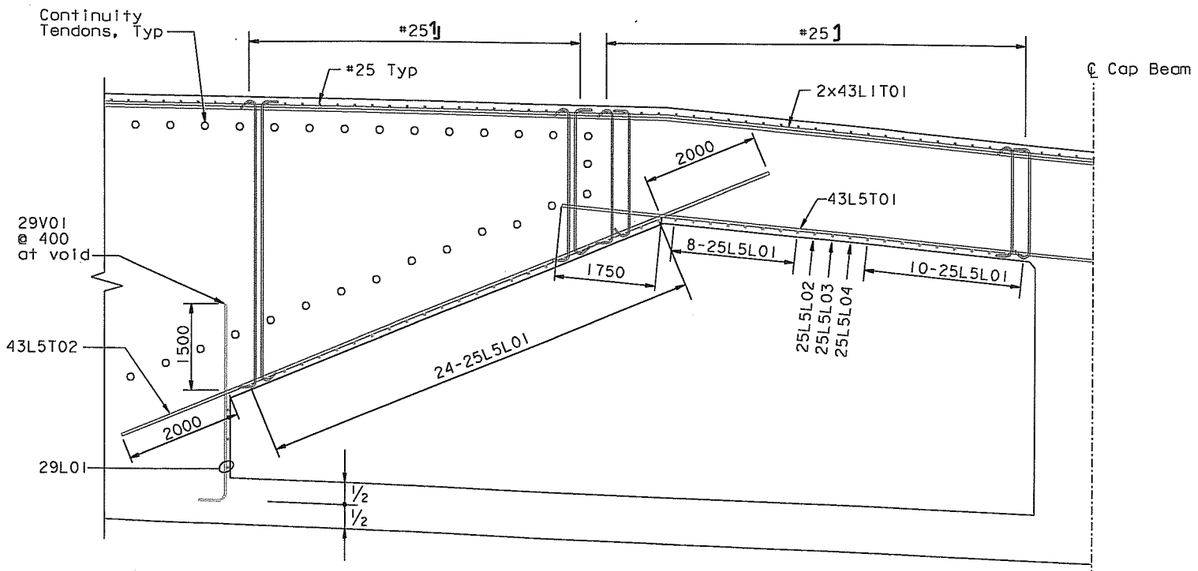

SECTION F-F

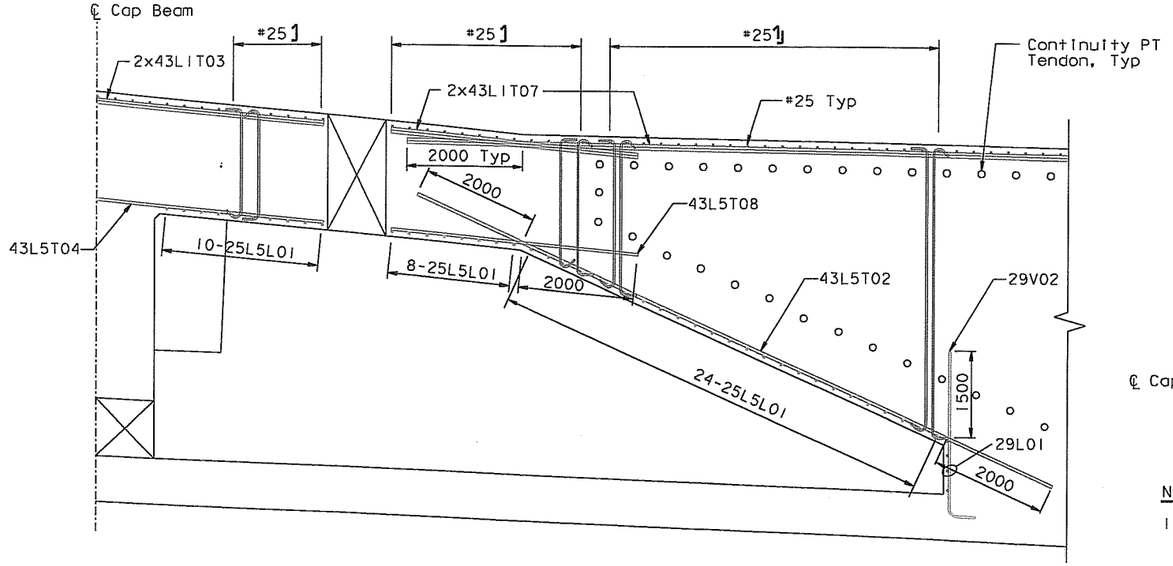

SECTION G-G

TOP MAT REINFORCEMENT
1:50

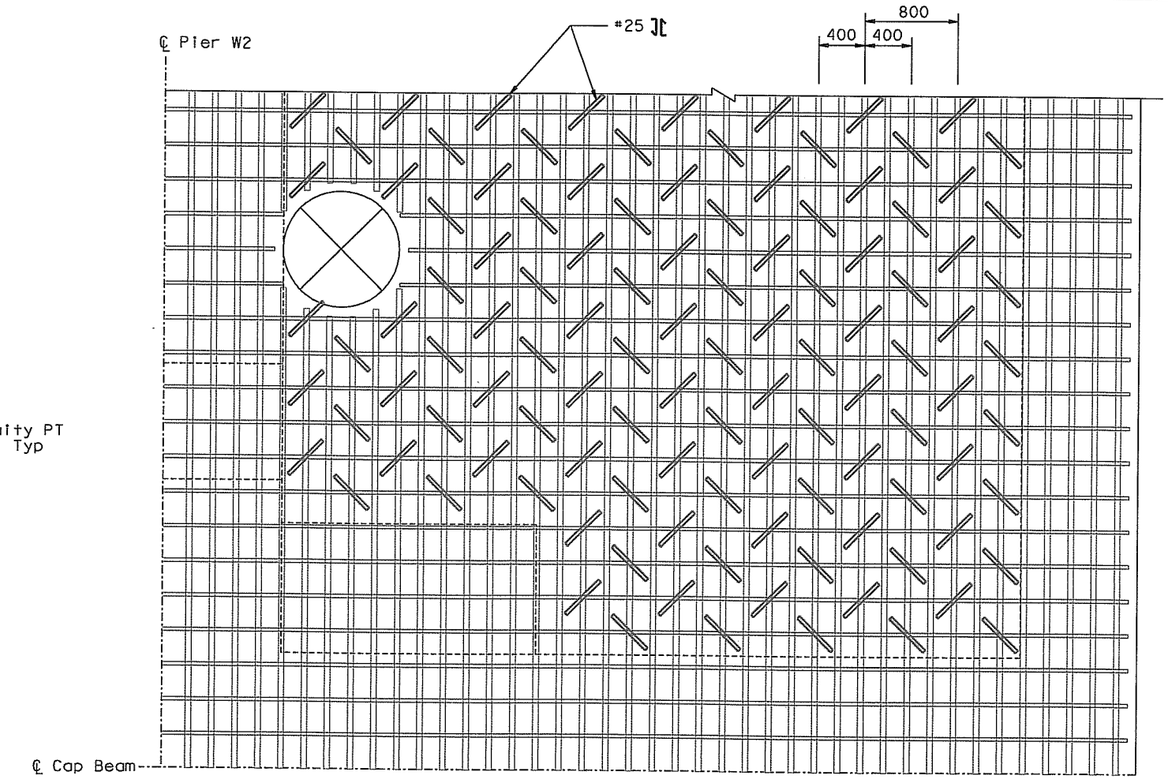

TOP SLAB STIRRUP PLAN (PARTIAL)
1:25

NOTES:

1. Bottom mat reinforcement not shown for clarity. See "W2 Cap Beam Reinforcement Details No. 9 to No. 17" sheets.
2. Diaphragm reinforcement not shown for clarity. See "W2 Cap Beam Reinforcement Details No. 26 to No. 29" sheets.
3. Jacking Saddle reinforcement not shown for clarity. See "W2 Cap Beam Reinforcement Details No. 30 to No. 33" sheets.
4. Horizontal and vertical stirrup reinforcement not shown for clarity. See "W2 Cap Beam Reinforcement Details No. 40 to No. 43" sheets.

Original Sheet Superseded

100 % PS&E

ALL DIMENSIONS ARE IN MILLIMETERS UNLESS OTHERWISE SHOWN

R. Valizadeh/V. Toan/Y.L./W.L./F.C.
DESIGN OVERSIGHT
Roger Valiza / Vong Toan / Y. Liu
SIGN OFF DATE 07/21/06
Rev. Date: 5-18-98

	BY	CHECKED
DESIGN	J. Sun	M. Chen
DETAILS	J. Duxbury	M. Chen
QUANTITIES	S. Shi	D. Harrison

PREPARED FOR THE STATE OF CALIFORNIA DEPARTMENT OF TRANSPORTATION

R. Manzanarez
PROJECT ENGINEER

BRIDGE NO. 34-0006L/R
KILOMETER POST 13.2/13.9

SAN FRANCISCO OAKLAND BAY BRIDGE
EAST SPAN SEISMIC SAFETY PROJECT
SELF-ANCHORED SUSPENSION BRIDGE
(SUPERSTRUCTURE & TOWER)

W2 CAP BEAM REINFORCEMENT DETAILS NO. 8

ORIGINAL SCALE IN MILLIMETERS FOR REDUCED PLANS 0 10 20 30 40 50 60 70 80 90 100

CU 04
EA 0120F1

DISREGARD PRINTS BEARING EARLIER REVISION DATES

REVISION DATES (PRELIMINARY STAGE ONLY) 05/31/01 04/08/02 07/01/02 12/19/02

SHEET 064R1 OF

FILE => I:\bb\04-012001\sas\contract plans and cco\cco\cco#23\dgn\aecap08r-c.dgn

USERNAME => ptom DATE PLOTTED => 07 JUN 2007 TIME PLOTTED => 14:26:23

MARK	DATE	DESCRIPTIONS	BY	CH'D	CCO#
1	07/21/06	W2 CAP BEAM ISD	JD	AS	23
		REVISIONS			

CONTRACT CHANGE ORDER NO. 23
SHEET 33 OF 102

FOR REVISIONS ONLY

NOTES:
1. For Section A-A and B-B, see "W2 Cap Beam Reinforcement Details No.16" sheet.
2. For Section C-C and D-D, see "W2 Cap Beam Reinforcement Details No.17" sheet.
3. For Section E-E, see "W2 Cap Beam Reinforcement Details No.18" sheet.

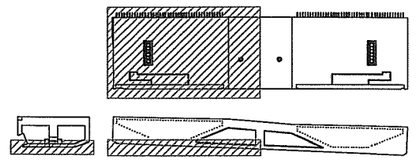

LOCATION KEY
NTS

DIST.	COUNTY	ROUTE	KILOMETER POST TOTAL PROJECT	SHEET NO.	TOTAL SHEETS
04	SF	80	13.2/13.9	482R1	1204

REGISTERED ENGINEER - CIVIL
12-6-04
PLANS APPROVAL DATE
The State of California or its officers or agents shall not be responsible for the accuracy or completeness of electronic copies of this plan sheet.

T.Y. LIN / MOFFATT & NICHOL
825 BATTERY STREET
SAN FRANCISCO, CA 94111

To get to the web site, go to: http://www.dot.ca.gov

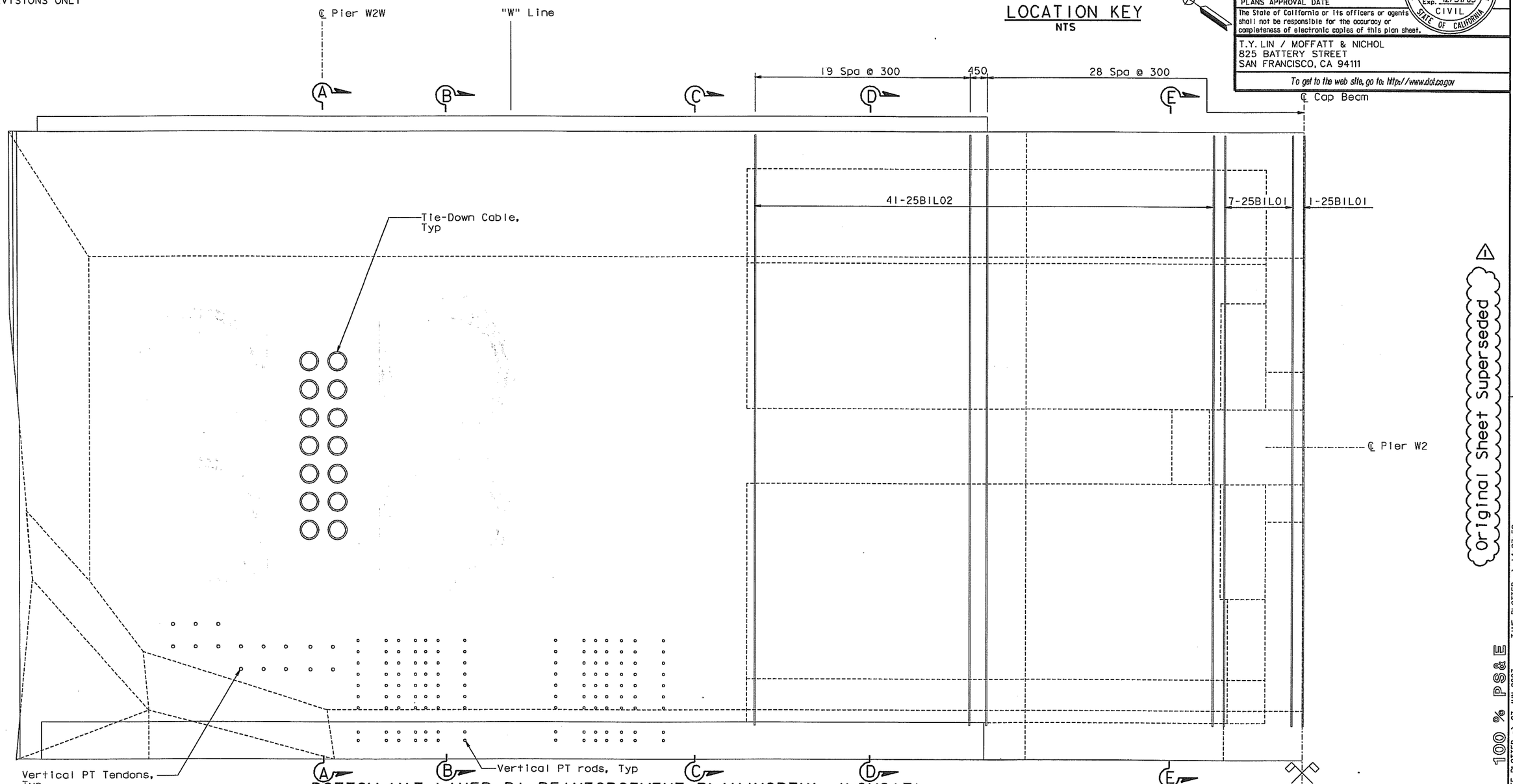

BOTTOM MAT-LAYER B1 REINFORCEMENT PLAN (NORTH) (LONGIT)
1:50

ALL DIMENSIONS ARE IN MILLIMETERS UNLESS OTHERWISE SHOWN

Original Sheet Superseded

100 % PS&E

DATE PLOTTED => 07 JUN 2007 TIME PLOTTED => 14:27:52

USERNAME => ptom

R. Valizadeh/V. Toan/Y.L./W.L./F.C.
DESIGN OVERSIGHT
SIGN OFF DATE 07/21/06

	BY	CHECKED
DESIGN	J. Sun	M. Chen
DETAILS	J. Duxbury	M. Chen
QUANTITIES	S. Shi	D. Harrison

PREPARED FOR THE STATE OF CALIFORNIA
DEPARTMENT OF TRANSPORTATION

R. Manzanarez
PROJECT ENGINEER

BRIDGE NO. 34-0006L/R
KILOMETER POST 13.2/13.9

SAN FRANCISCO OAKLAND BAY BRIDGE
EAST SPAN SEISMIC SAFETY PROJECT
SELF-ANCHORED SUSPENSION BRIDGE
(SUPERSTRUCTURE & TOWER)
W2 CAP BEAM REINFORCEMENT DETAILS NO. 9

Rev. Date: 5-18-98

ORIGINAL SCALE IN MILLIMETERS FOR REDUCED PLANS 0 10 20 30 40 50 60 70 80 90 100

CU 04
EA 0120F1

DISREGARD PRINTS BEARING EARLIER REVISION DATES

REVISION DATES (PRELIMINARY STAGE ONLY): 05/27/01 | 09/28/02 | 07/29/02 | 12/13/02

SHEET 065R1 OF

FILE => I:\bb\04-012001\sas\contract plans and cco\cco\cco#23\dgn\aecap38r-c.dgn

REGISTERED PROFESSIONAL ENGINEER
James P Duxbury
No. C 64677
Exp. 06/30/07
CIVIL
STATE OF CALIFORNIA

FOR REVISIONS ONLY

MARK	DATE	DESCRIPTIONS	BY	CH'D	CCO#
1	07/21/06	W2 CAP BEAM ISD	JD	AS	23
		REVISIONS			

CONTRACT CHANGE ORDER NO. 23
SHEET 34 OF 102

NOTES:
1. For Section A-A and B-B, see "W2 Cap Beam Reinforcement Details No.16" sheet.
2. For Section C-C and D-D, see "W2 Cap Beam Reinforcement Details No.17" sheet.
3. For Section E-E, see "W2 Cap Beam Reinforcement Details No.18" sheet.

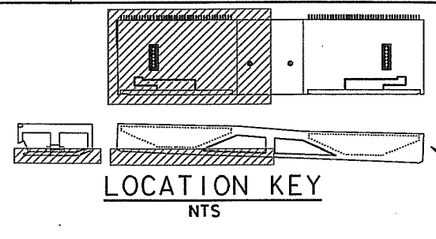

LOCATION KEY
NTS

Caltrans Metric

DIST.	COUNTY	ROUTE	KILOMETER POST TOTAL PROJECT	SHEET NO.	TOTAL SHEETS
04	SF	80	13.2/13.9	483R1	1204

REGISTERED ENGINEER - CIVIL

12-6-04
PLANS APPROVAL DATE

REGISTERED PROFESSIONAL ENGINEER
John Sun
No. C 54648
Exp. 12/31/05
CIVIL
STATE OF CALIFORNIA

The State of California or its officers or agents shall not be responsible for the accuracy or completeness of electronic copies of this plan sheet.

T.Y. LIN / MOFFATT & NICHOL
825 BATTERY STREET
SAN FRANCISCO, CA 94111

To get to the web site, go to: http://www.dot.ca.gov

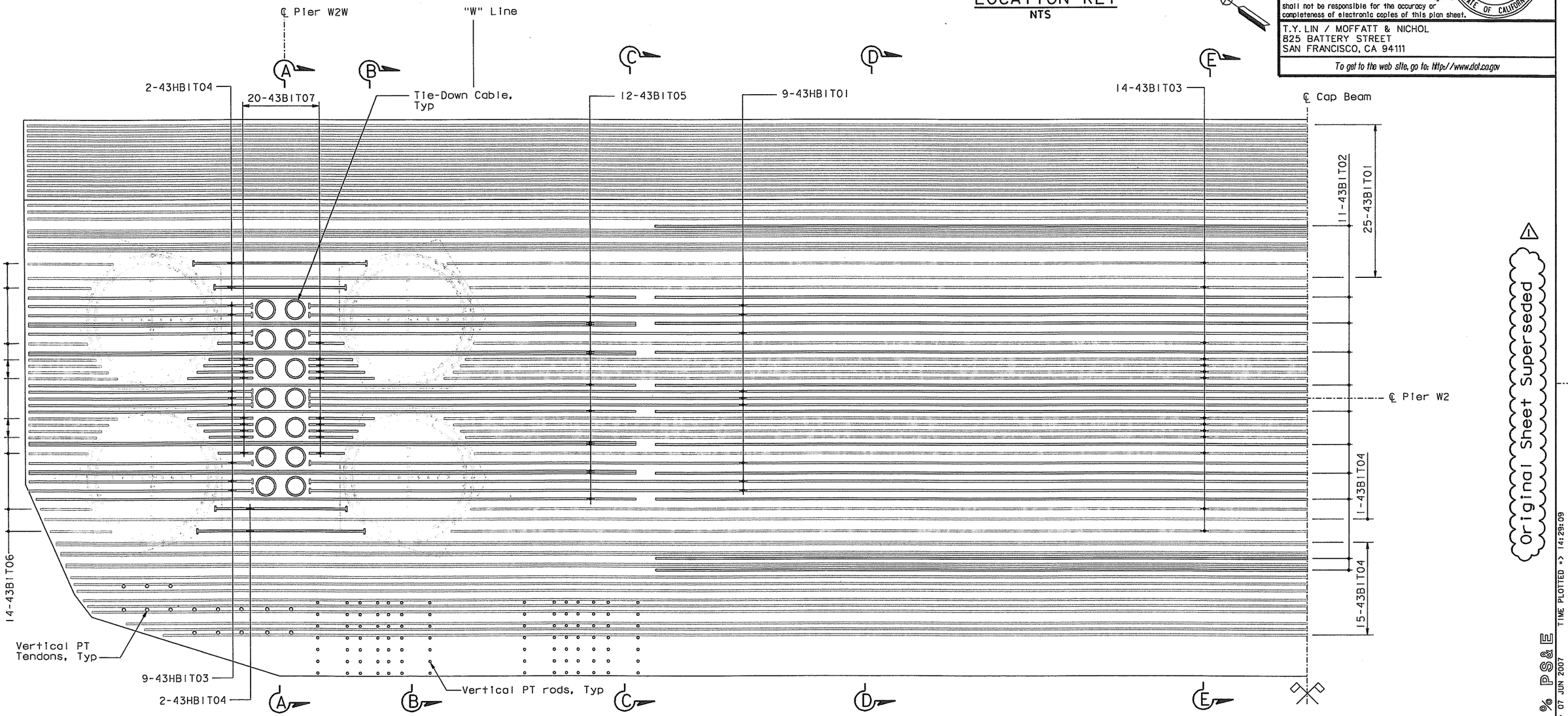

BOTTOM MAT-LAYER B1 REINFORCEMENT PLAN(NORTH) (TRANSVERSE)
1:50

ALL DIMENSIONS ARE IN MILLIMETERS UNLESS OTHERWISE SHOWN

Original Sheet Superseded

100 % PS&E

USERNAME => ptsm DATE PLOTTED => 07 JUN 2007 TIME PLOTTED => 14:29:09

R. Valizadeh/V. Toan/Y.L./W.L./F.C.
DESIGN OVERSIGHT
SIGN OFF DATE 07/21/06

	BY	CHECKED
DESIGN	J. Sun	M. Chen
DETAILS	J. Duxbury	M. Chen
QUANTITIES	S. Shi	D. Harrison

PREPARED FOR THE STATE OF CALIFORNIA
DEPARTMENT OF TRANSPORTATION

R. Manzanarez
PROJECT ENGINEER

BRIDGE NO. 34-0006L/R
KILOMETER POST 13.2/13.9

SAN FRANCISCO OAKLAND BAY BRIDGE
EAST SPAN SEISMIC SAFETY PROJECT
SELF-ANCHORED SUSPENSION BRIDGE
(SUPERSTRUCTURE & TOWER)

W2 CAP BEAM REINFORCEMENT DETAILS NO. 10

Rev. Date: 5-18-98

ORIGINAL SCALE IN MILLIMETERS FOR REDUCED PLANS 0 10 20 30 40 50 60 70 80 90 100

CU 04
EA 0120F1

DISREGARD PRINTS BEARING EARLIER REVISION DATES

REVISION DATES (PRELIMINARY STAGE ONLY): 05/31/01 | 01/08/02 | 07/31/02 | 12/19/02

SHEET 066R1 OF

FILE => I:\bb\04-0120I\sas\contract plans and cco\cco\cco#23\dgn\aecap09r-c.dgn

REGISTERED PROFESSIONAL ENGINEER — Jeffrey P. Duxbury — No. C 64677 — Exp. 06/30/07 — CIVIL — STATE OF CALIFORNIA

FOR REVISIONS ONLY

MARK	DATE	DESCRIPTIONS	BY	CH'D	CCO#
1	07/21/06	W2 CAP BEAM ISD	JD	AS	23
		REVISIONS			

CONTRACT CHANGE ORDER NO. 23
SHEET 35 OF 102

NOTES:
1. For Section A-A and B-B, see "W2 Cap Beam Reinforcement Details No.16" sheet.
2. For Section C-C and D-D, see "W2 Cap Beam Reinforcement Details No.17" sheet.
3. For Section E-E, see "W2 Cap Beam Reinforcement Details No.18" sheet.

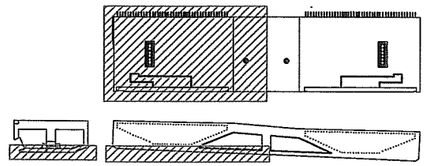

LOCATION KEY
NTS

Caltrans Metric

DIST.	COUNTY	ROUTE	KILOMETER POST TOTAL PROJECT	SHEET NO.	TOTAL SHEETS
04	SF	80	13.2/13.9	484RI	1204

REGISTERED ENGINEER - CIVIL

12-6-04
PLANS APPROVAL DATE

REGISTERED PROFESSIONAL ENGINEER — John Sun — No. C 54648 — Exp. 12/31/05 — CIVIL — STATE OF CALIFORNIA

The State of California or its officers or agents shall not be responsible for the accuracy or completeness of electronic copies of this plan sheet.

T.Y. LIN / MOFFATT & NICHOL
825 BATTERY STREET
SAN FRANCISCO, CA 94111

To get to the web site, go to: http://www.dot.ca.gov

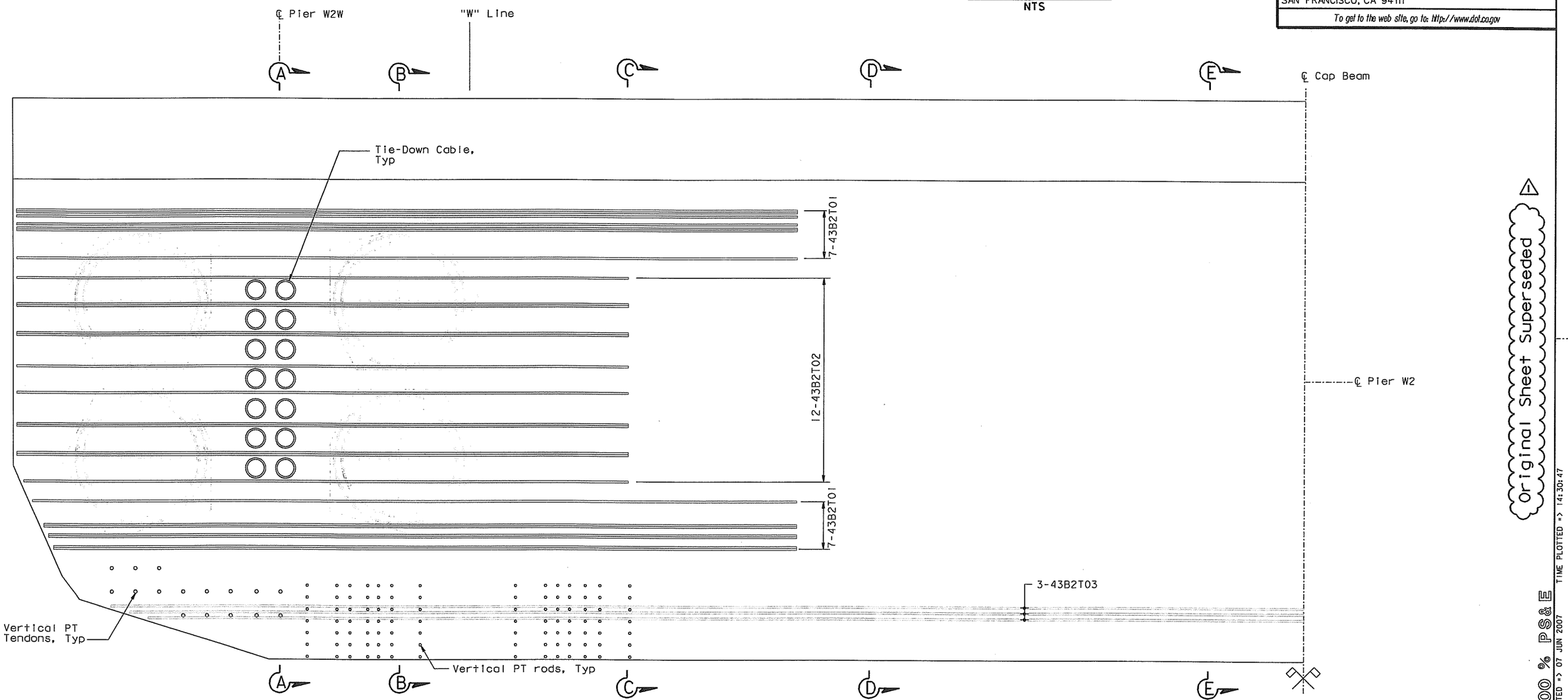

BOTTOM MAT-LAYER B2 REINFORCEMENT PLAN (NORTH) (TRANSVERSE)
1:50

Original Sheet Superseded

100 % PS&E

DATE PLOTTED => 07 JUN 2007 TIME PLOTTED => 14:30:47
USERNAME => ptam

ALL DIMENSIONS ARE IN MILLIMETERS UNLESS OTHERWISE SHOWN

SAN FRANCISCO OAKLAND BAY BRIDGE
EAST SPAN SEISMIC SAFETY PROJECT
SELF-ANCHORED SUSPENSION BRIDGE
(SUPERSTRUCTURE & TOWER)

W2 CAP BEAM REINFORCEMENT DETAILS NO. II

R. Valizadeh/V. Toan/Y.L./W.L./F.C.
DESIGN OVERSIGHT
SIGN OFF DATE 07/21/06

	BY	CHECKED
DESIGN	J. Sun	M. Chen
DETAILS	J. Duxbury	M. Chen
QUANTITIES	S. Shi	D. Harrison

PREPARED FOR THE STATE OF CALIFORNIA
DEPARTMENT OF TRANSPORTATION

R. Manzanarez
PROJECT ENGINEER

BRIDGE NO. 34-0006L/R
KILOMETER POST 13.2/13.9

CU 04
EA 0120F1

Rev. Date: 5-18-98

ORIGINAL SCALE IN MILLIMETERS FOR REDUCED PLANS 0 10 20 30 40 50 60 70 80 90 100

DISREGARD PRINTS BEARING EARLIER REVISION DATES →

REVISION DATES (PRELIMINARY STAGE ONLY): 05/31/01 | 04/08/02 | 07/31/02 | 12/19/02

SHEET 067RI OF

FILE => I:\bb\04-012001\sas\contract plans and cco\cco\cco#23\dgn\aecap10r-c.dgn

REGISTERED PROFESSIONAL ENGINEER
James P. Duxbury
No. C 64677
Exp. 06/30/07
CIVIL
STATE OF CALIFORNIA

FOR REVISIONS ONLY

MARK	DATE	DESCRIPTIONS	BY	CH'D	CCO#
1	07/21/06	W2 CAP BEAM ISD	JD	AS	23

REVISIONS

CONTRACT CHANGE ORDER NO. 23

SHEET 36 OF 102

NOTES:

1. For Section A-A and B-B, see "W2 Cap Beam Reinforcement Details No.16" sheet.
2. For Section C-C and D-D, see "W2 Cap Beam Reinforcement Details No.17" sheet.
3. For Section E-E, see "W2 Cap Beam Reinforcement Details No.18" sheet.

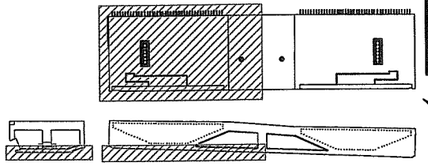

LOCATION KEY

NTS

Caltrans Metric

DIST.	COUNTY	ROUTE	KILOMETER POST TOTAL PROJECT	SHEET NO.	TOTAL SHEETS
04	SF	80	13.2/13.9	485R1	1204

REGISTERED ENGINEER - CIVIL

12-6-04

PLANS APPROVAL DATE

REGISTERED PROFESSIONAL ENGINEER John Sun No. C 54648 Exp. 12/31/05 CIVIL STATE OF CALIFORNIA

The State of California or its officers or agents shall not be responsible for the accuracy or completeness of electronic copies of this plan sheet.

T.Y. LIN / MOFFATT & NICHOL
825 BATTERY STREET
SAN FRANCISCO, CA 94111

To get to the web site, go to: http://www.dot.ca.gov

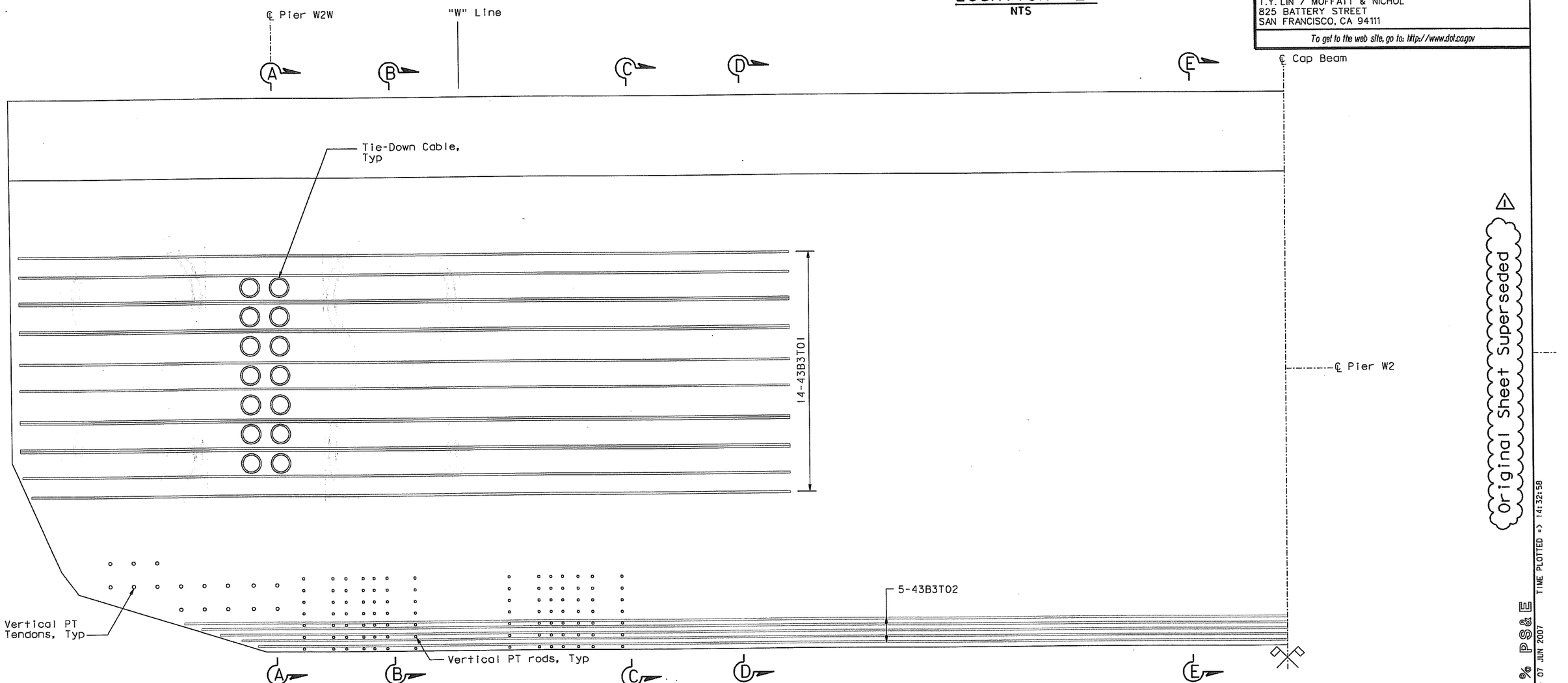

BOTTOM MAT-LAYER B3 REINFORCEMENT PLAN(NORTH) (TRANSVERSE)

1:50

ALL DIMENSIONS ARE IN MILLIMETERS UNLESS OTHERWISE SHOWN

SAN FRANCISCO OAKLAND BAY BRIDGE
EAST SPAN SEISMIC SAFETY PROJECT
SELF-ANCHORED SUSPENSION BRIDGE
(SUPERSTRUCTURE & TOWER)

W2 CAP BEAM REINFORCEMENT DETAILS NO. 12

R. Valizadeh/V. Toan/Y.L./W.L./F.C.
DESIGN OVERSIGHT
SIGN OFF DATE 07/21/06

	BY	CHECKED
DESIGN	J. Sun	M. Chen
DETAILS	J. Duxbury	M. Chen
QUANTITIES	S. Shi	D. Harrison

PREPARED FOR THE STATE OF CALIFORNIA
DEPARTMENT OF TRANSPORTATION

R. Manzanarez
PROJECT ENGINEER

BRIDGE NO. 34-0006L/R
KILOMETER POST 13.2/13.9

CU 04
EA 0120F1

DISREGARD PRINTS BEARING EARLIER REVISION DATES →

REVISION DATES (PRELIMINARY STAGE ONLY): 05/17/01 | 01/08/02 | 01/21/02 | 12/19/02

SHEET 068R1 OF

ORIGINAL SCALE IN MILLIMETERS FOR REDUCED PLANS 0 10 20 30 40 50 60 70 80 90 100

Rev. Date: 5-18-98

FILE => I:\bb\04-012001\sas\contract plans and cco\cco\cco#23\dgn\aecapllr-c.dgn

DATE PLOTTED => 07 JUN 2007 TIME PLOTTED => 14:32:58

USERNAME => ptrom

MARK	DATE	DESCRIPTIONS	BY	CH'D	CCO#
1	07/21/06	W2 CAP BEAM ISD	JD	AS	23

REVISIONS

CONTRACT CHANGE ORDER NO. 23

SHEET 37 OF 102

FOR REVISIONS ONLY

REGISTERED PROFESSIONAL ENGINEER — James P. Duxbury — No. C 64677 — Exp. 06/30/07 — CIVIL — STATE OF CALIFORNIA

NOTES:

1. For Section A-A and B-B, see "W2 Cap Beam Reinforcement Details No.16" sheet.
2. For Section C-C and D-D, see "W2 Cap Beam Reinforcement Details No.17" sheet.
3. For Section E-E, see "W2 Cap Beam Reinforcement Details No.18" sheet.

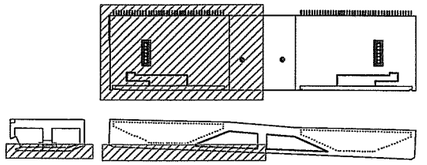

LOCATION KEY

NTS

Caltrans Metric

DIST.	COUNTY	ROUTE	KILOMETER POST TOTAL PROJECT	SHEET NO.	TOTAL SHEETS
04	SF	80	13.2/13.9	486R1	1204

REGISTERED ENGINEER - CIVIL

12-6-04

PLANS APPROVAL DATE

REGISTERED PROFESSIONAL ENGINEER — John Sun — No. C 54648 — Exp. 12/31/05 — CIVIL — STATE OF CALIFORNIA

The State of California or its officers or agents shall not be responsible for the accuracy or completeness of electronic copies of this plan sheet.

T.Y. LIN / MOFFATT & NICHOL
825 BATTERY STREET
SAN FRANCISCO, CA 94111

To get to the web site, go to: http://www.dot.ca.gov

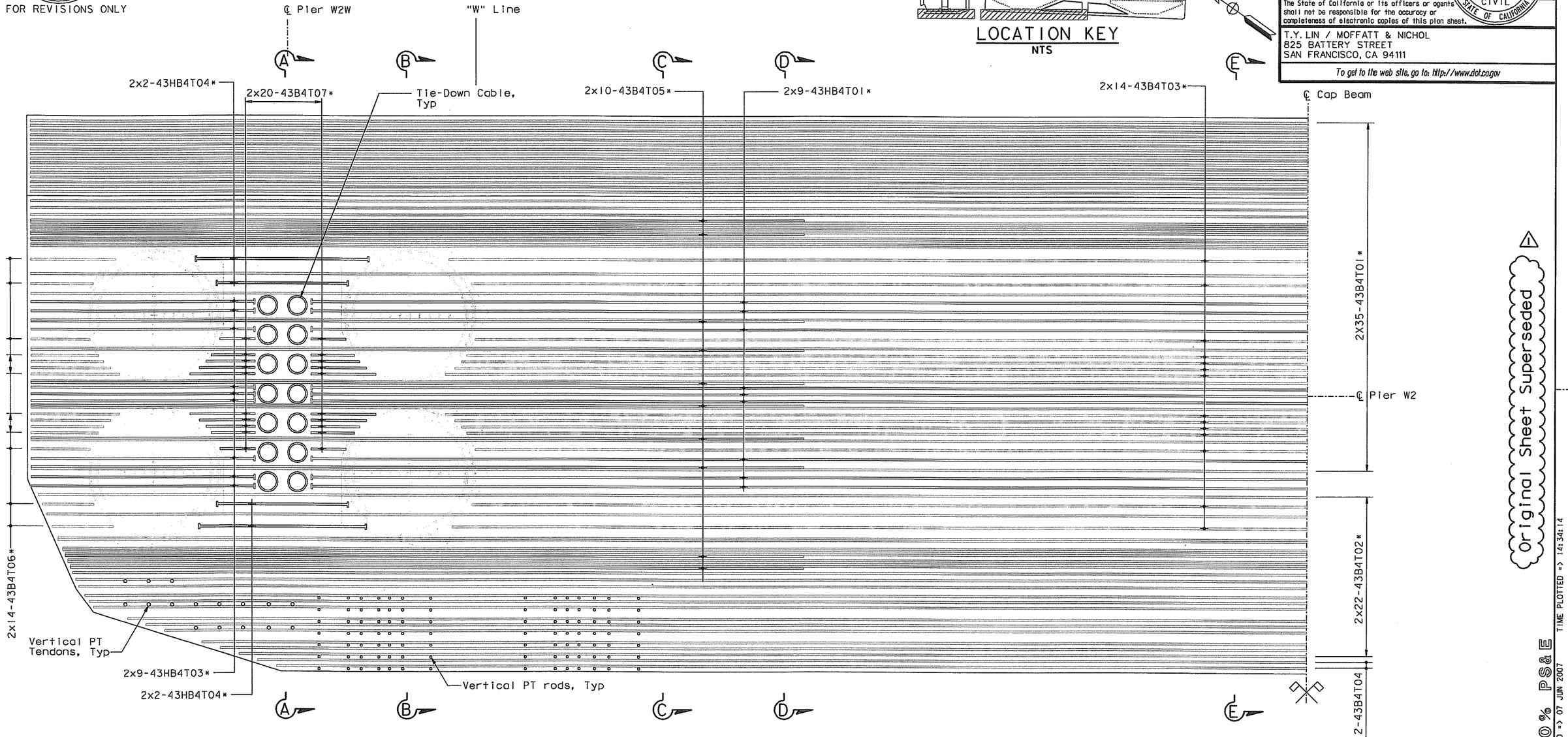

Original Sheet Superseded

100% PS&E

TIME PLOTTED => 14:34:14

DATE PLOTTED => 07 JUN 2007

USERNAME => ptom

BOTTOM MAT-LAYER B4 REINFORCEMENT PLAN(NORTH) (TRANSVERSE)

1:50

* Denotes Bars Bundled Vertically

ALL DIMENSIONS ARE IN MILLIMETERS UNLESS OTHERWISE SHOWN

R. Valizadeh/V. Toan/Y.L./W.L./F.C.
DESIGN OVERSIGHT
SIGN OFF DATE 07/21/06

	BY	CHECKED
DESIGN	J. Sun	M. Chen
DETAILS	J. Duxbury	M. Chen
QUANTITIES	S. Shi	D. Harrison

PREPARED FOR THE STATE OF CALIFORNIA DEPARTMENT OF TRANSPORTATION

R. Manzanarez
PROJECT ENGINEER

BRIDGE NO. 34-0006L/R
KILOMETER POST 13.2/13.9

SAN FRANCISCO OAKLAND BAY BRIDGE
EAST SPAN SEISMIC SAFETY PROJECT
SELF-ANCHORED SUSPENSION BRIDGE
(SUPERSTRUCTURE & TOWER)

W2 CAP BEAM REINFORCEMENT DETAILS NO. 13

Rev. Date: 5-18-98

ORIGINAL SCALE IN MILLIMETERS FOR REDUCED PLANS 0 10 20 30 40 50 60 70 80 90 100

CU 04
EA 0120F1

DISREGARD PRINTS BEARING EARLIER REVISION DATES

REVISION DATES (PRELIMINARY STAGE ONLY): 05/31/01 | 04/08/02 | 01/01/02 | 12/19/02

SHEET 069R1 OF

FILE => I:\bb\04-012001\sas\contract plans and cco\cco\cco#23\dgn\aecap12r-c.dgn

MARK	DATE	DESCRIPTIONS	BY	CH'D	CCO#
1	07/21/06	W2 CAP BEAM ISD	JD	AS	23

REVISIONS

CONTRACT CHANGE ORDER NO. 23
SHEET 38 OF 102

FOR REVISIONS ONLY

REGISTERED PROFESSIONAL ENGINEER Barnes P. Duxbury No. C 64677 Exp. 06/30/07 CIVIL STATE OF CALIFORNIA

NOTES:

1. For Section A-A and B-B, see "W2 Cap Beam Reinforcement Details No. 16" sheet.
2. For Section C-C and D-D, see "W2 Cap Beam Reinforcement Details No. 17" sheet.
3. For Section E-E, see "W2 Cap Beam Reinforcement Details No. 18" sheet.

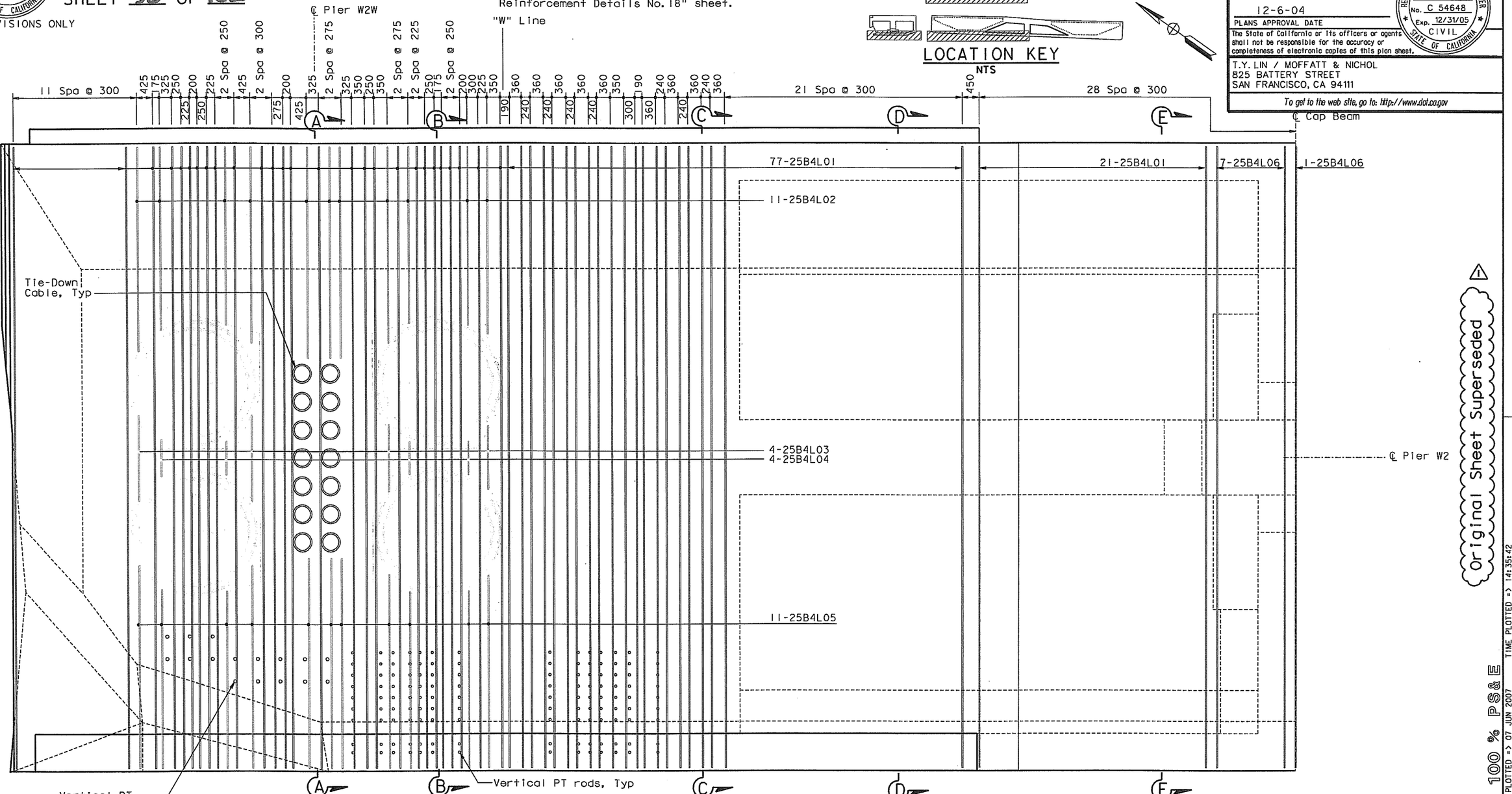

BOTTOM MAT-LAYER B4 REINFORCEMENT PLAN (NORTH) (LONGIT)
(South Side Similar)
1:50

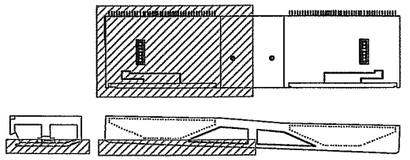

LOCATION KEY
NTS

Caltrans Metric

DIST.	COUNTY	ROUTE	KILOMETER POST TOTAL PROJECT	SHEET NO.	TOTAL SHEETS
04	SF	80	13.2/13.9	487R1	1204

REGISTERED ENGINEER - CIVIL
12-6-04
PLANS APPROVAL DATE

REGISTERED PROFESSIONAL ENGINEER John Sun No. C 54648 Exp. 12/31/05 CIVIL STATE OF CALIFORNIA

The State of California or its officers or agents shall not be responsible for the accuracy or completeness of electronic copies of this plan sheet.

T.Y. LIN / MOFFATT & NICHOL
825 BATTERY STREET
SAN FRANCISCO, CA 94111

To get to the web site, go to: http://www.dot.ca.gov

Original Sheet Superseded

100 % PS&E

ALL DIMENSIONS ARE IN MILLIMETERS UNLESS OTHERWISE SHOWN

SAN FRANCISCO OAKLAND BAY BRIDGE
EAST SPAN SEISMIC SAFETY PROJECT
SELF-ANCHORED SUSPENSION BRIDGE
(SUPERSTRUCTURE & TOWER)

W2 CAP BEAM REINFORCEMENT DETAILS NO. 14

R. Valizadeh/V. Toan/Y.L./W.L./F.C.
DESIGN OVERSIGHT
Reza Valizadeh / Vong Toan / Y. Liu
SIGN OFF DATE 07/21/06

	BY	CHECKED
DESIGN	J. Sun	M. Chen
DETAILS	J. Duxbury	M. Chen
QUANTITIES	S. Shi	D. Harrison

PREPARED FOR THE STATE OF CALIFORNIA DEPARTMENT OF TRANSPORTATION

R. Manzanarez
PROJECT ENGINEER

BRIDGE NO. 34-0006L/R
KILOMETER POST 13.2/13.9

Rev. Date: 5-18-98

ORIGINAL SCALE IN MILLIMETERS FOR REDUCED PLANS 0 10 20 30 40 50 60 70 80 90 100

CU 04
EA 0120F1

DISREGARD PRINTS BEARING EARLIER REVISION DATES

REVISION DATES (PRELIMINARY STAGE ONLY) 05/31/01 04/08/02 07/01/02 12/19/02

SHEET 070R1 OF

FILE => I:\bb\04-012001\sas\contract plans and cco\cco\cco#23\dgn\aecap13r-c.dgn

USERNAME => ptom DATE PLOTTED => 07 JUN 2007 TIME PLOTTED => 14:35:42

MARK	DATE	DESCRIPTIONS	BY	CH'D	CCO#
1	07/21/06	W2 CAP BEAM ISD	JD	AS	23

REVISIONS

CONTRACT CHANGE ORDER NO. 23
SHEET 39 OF 102

FOR REVISIONS ONLY

REGISTERED PROFESSIONAL ENGINEER James P. Duxbury No. C 64677 Exp. 06/30/07 CIVIL STATE OF CALIFORNIA

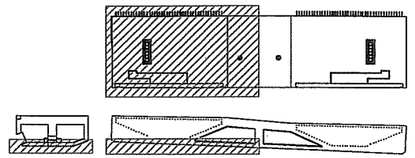

LOCATION KEY
NTS

Caltrans Metric

DIST.	COUNTY	ROUTE	KILOMETER POST TOTAL PROJECT	SHEET NO.	TOTAL SHEETS
04	SF	80	13.2/13.9	488R1	1204

REGISTERED ENGINEER - CIVIL
12-6-04
PLANS APPROVAL DATE

REGISTERED PROFESSIONAL ENGINEER John Sun No. C 54648 Exp. 12/31/05 CIVIL STATE OF CALIFORNIA

The State of California or its officers or agents shall not be responsible for the accuracy or completeness of electronic copies of this plan sheet.

T.Y. LIN / MOFFATT & NICHOL
825 BATTERY STREET
SAN FRANCISCO, CA 94111

To get to the web site, go to: http://www.dot.ca.gov

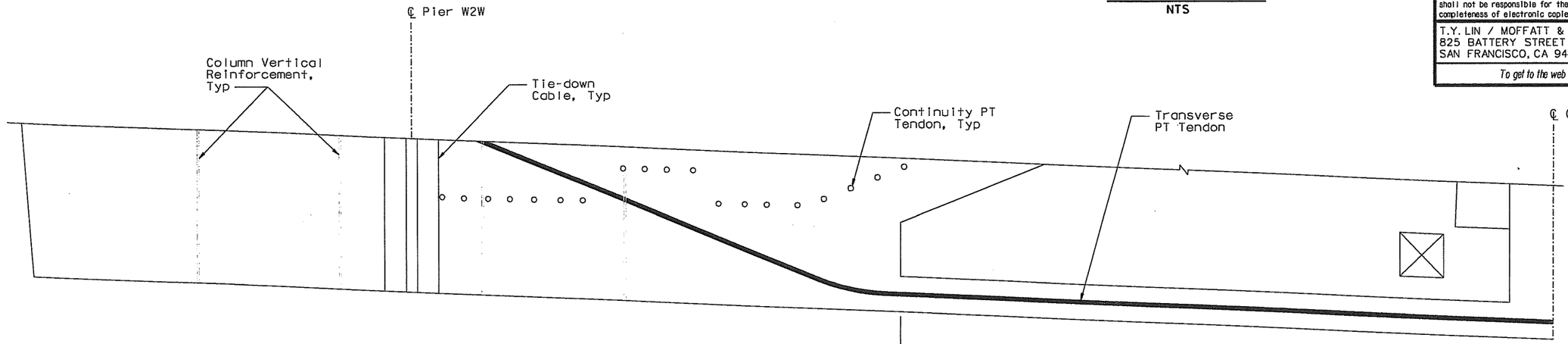

ELEVATION

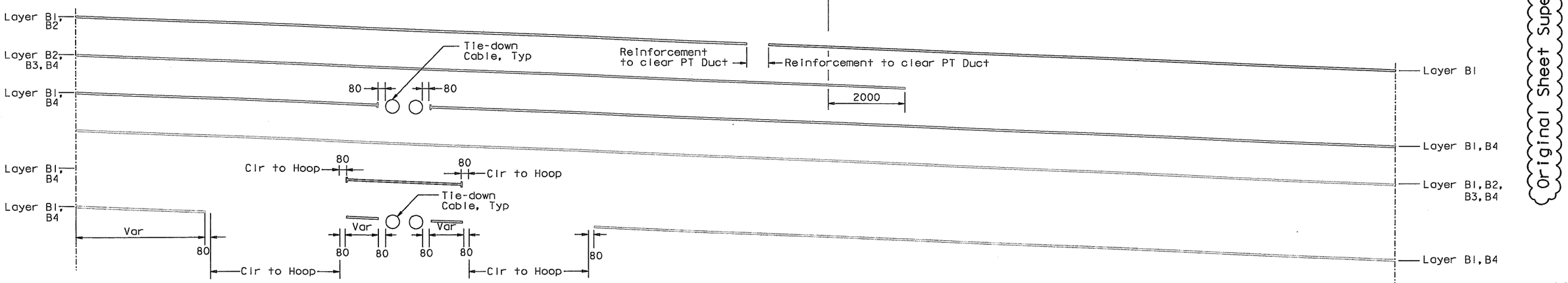

PLAN VIEW

BOTTOM MAT REINFORCEMENT EXTENT PLAN

Original Sheet Superseded

100 % PS&E

ALL DIMENSIONS ARE IN MILLIMETERS UNLESS OTHERWISE SHOWN

R. Valizadeh/V. Toan/Y.L./W.L./F.C.
DESIGN OVERSIGHT
Reza Valizadeh / Vong Toan / Y. Lin
SIGN OFF DATE 07/21/06

	BY	CHECKED
DESIGN	J. Sun	M. Chen
DETAILS	J. Duxbury	M. Chen
QUANTITIES	S. Shi	D. Harrison

PREPARED FOR THE STATE OF CALIFORNIA DEPARTMENT OF TRANSPORTATION

R. Manzanarez
PROJECT ENGINEER

BRIDGE NO. 34-0006L/R
KILOMETER POST 13.2/13.9

SAN FRANCISCO OAKLAND BAY BRIDGE
EAST SPAN SEISMIC SAFETY PROJECT
SELF-ANCHORED SUSPENSION BRIDGE
(SUPERSTRUCTURE & TOWER)

W2 CAP BEAM REINFORCEMENT DETAILS NO. 15

Rev. Date: 5-18-98

ORIGINAL SCALE IN MILLIMETERS FOR REDUCED PLANS 0 10 20 30 40 50 60 70 80 90 100

CU 04
EA 0120F1

DISREGARD PRINTS BEARING EARLIER REVISION DATES

REVISION DATES (PRELIMINARY STAGE ONLY) 05/31/01 04/08/02 07/01/02 12/19/02

SHEET 071R1 OF

FILE => I:\bb\04-012001\sas\contract plans and cco\cco\cco#23\dgn\aecap14r-c.dgn

USERNAME => ptam DATE PLOTTED => 07 JUN 2007 TIME PLOTTED => 14:36:49

MARK	DATE	DESCRIPTIONS	BY	CH'D	CCO#
1	07/21/06	W2 CAP BEAM ISD	JD	AS	23

REVISIONS

CONTRACT CHANGE ORDER NO. 23
SHEET 40 OF 102

FOR REVISIONS ONLY

NOTES:

1. East face and West face reinforcement not shown for clarity. See "W2 Cap Beam Reinforcement Details No. 19 to No. 25" sheets.
2. Vertical and horizontal stirrup reinforcement not shown for clarity. See "W2 Cap Beam Reinforcement Details No. 40 to No. 43" sheets.
3. For spacing, see "W2 Cap Beam Reinforcement Details No. 17" sheet.

DIST.	COUNTY	ROUTE	KILOMETER POST TOTAL PROJECT	SHEET NO.	TOTAL SHEETS
04	SF	80	13.2/13.9	489R1	1204

REGISTERED ENGINEER - CIVIL
12-6-04
PLANS APPROVAL DATE

The State of California or its officers or agents shall not be responsible for the accuracy or completeness of electronic copies of this plan sheet.

T.Y. LIN / MOFFATT & NICHOL
825 BATTERY STREET
SAN FRANCISCO, CA 94111

To get to the web site, go to: http://www.dot.ca.gov

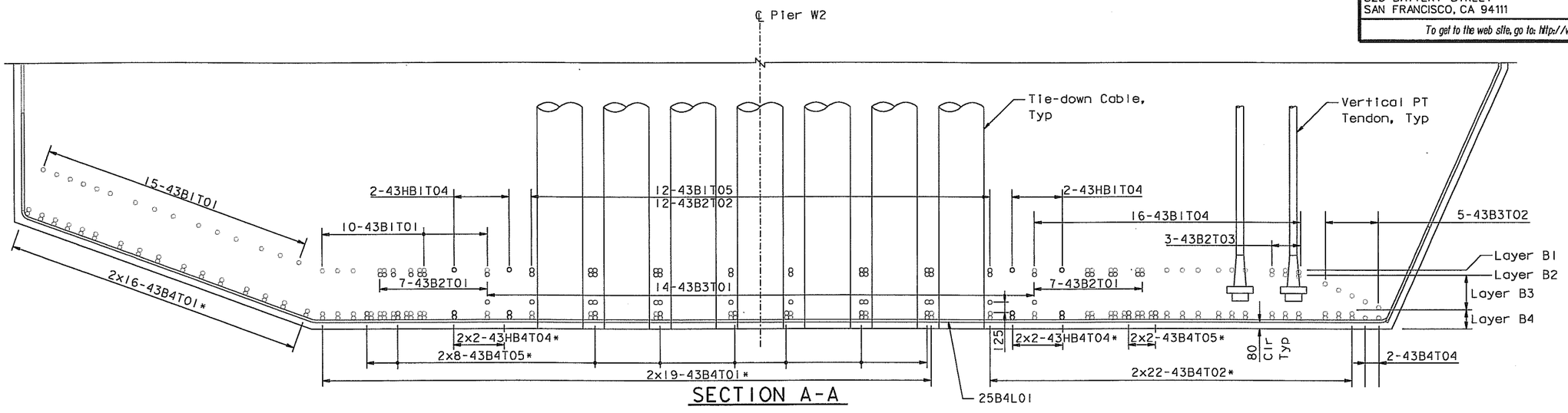

SECTION A-A

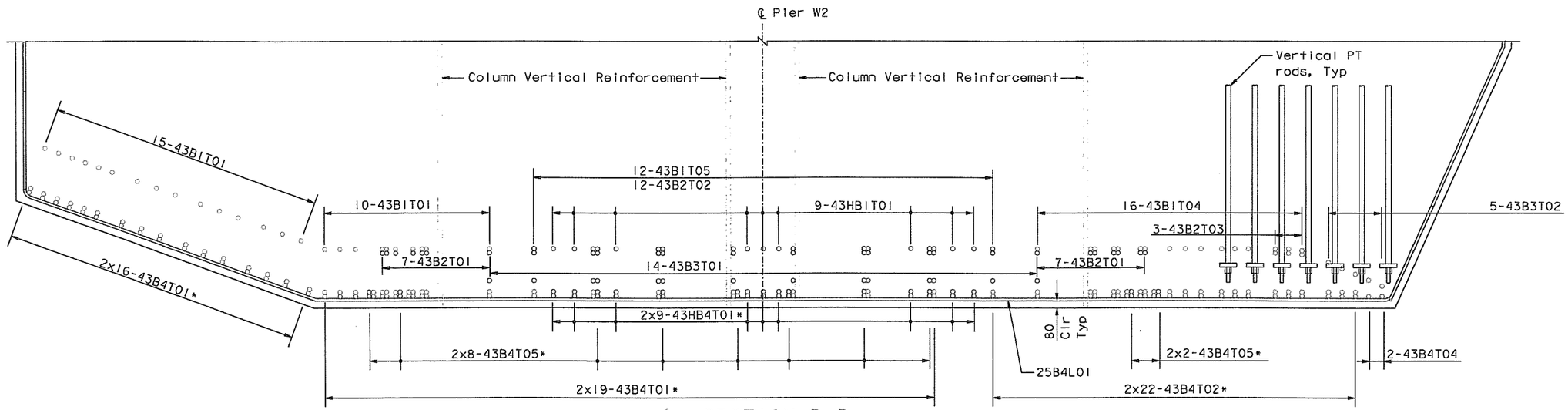

SECTION B-B

* Denotes Bars Bundled Vertically

BOTTOM MAT REINFORCEMENT
(North Side shown, South Side similar)
1:25

ALL DIMENSIONS ARE IN MILLIMETERS UNLESS OTHERWISE SHOWN

Original Sheet Superseded

100 % PS&E

DATE PLOTTED => 07 JUN 2007 TIME PLOTTED => 14:37:40

USERNAME => ptom

R. Valizadeh/V. Toan/Y.L./W.L./F.C.
DESIGN OVERSIGHT
SIGN OFF DATE 07/21/06

	BY	CHECKED
DESIGN	J. Sun	M. Chen
DETAILS	J. Duxbury	M. Chen
QUANTITIES	S. Shi	D. Harrison

PREPARED FOR THE STATE OF CALIFORNIA DEPARTMENT OF TRANSPORTATION

R. Manzanarez
PROJECT ENGINEER

BRIDGE NO. 34-0006L/R
KILOMETER POST 13.2/13.9

SAN FRANCISCO OAKLAND BAY BRIDGE
EAST SPAN SEISMIC SAFETY PROJECT
SELF-ANCHORED SUSPENSION BRIDGE
(SUPERSTRUCTURE & TOWER)

W2 CAP BEAM REINFORCEMENT DETAILS NO. 16

Rev. Date: 5-18-98

ORIGINAL SCALE IN MILLIMETERS FOR REDUCED PLANS 0 10 20 30 40 50 60 70 80 90 100

CU 04
EA 0120F1

DISREGARD PRINTS BEARING EARLIER REVISION DATES

REVISION DATES (PRELIMINARY STAGE ONLY) 05/31/01 04/08/02 07/01/02 12/19/02

SHEET 072R1 OF

FILE => I:\bb\04-012001\sas\contract plans and cco\cco\cco#23\dgn\aecap15r-c.dgn

REGISTERED PROFESSIONAL ENGINEER — Yaser P. Dusdury — No. C 64677 — Exp. 06/30/07 — CIVIL — STATE OF CALIFORNIA

FOR REVISIONS ONLY

MARK	DATE	DESCRIPTIONS	BY	CH'D	CCO#
1	01/21/06	W2 CAP BEAM ISD	JD	AS	23
		REVISIONS			

CONTRACT CHANGE ORDER NO. 23

SHEET 41 OF 102

NOTES:

1. East face and West face reinforcement not shown for clarity. See "W2 Cap Beam Reinforcement Details No.19 to No.25" sheets.
2. Diaphragm reinforcement not shown for clarity. See "W2 Cap Beam Reinforcement Details No.26 to No.29" sheets.
3. Horizontal stirrup reinforcement not shown for clarity. See "W2 Cap Beam Reinforcement Details No.40 to No.43" sheets.

Caltrans Metric

DIST.	COUNTY	ROUTE	KILOMETER POST TOTAL PROJECT	SHEET NO.	TOTAL SHEETS
04	SF	80	13.2/13.9	490R1	1204

REGISTERED ENGINEER - CIVIL

12-6-04

PLANS APPROVAL DATE

REGISTERED PROFESSIONAL ENGINEER — John Sun — No. C 54648 — Exp. 12/31/05 — CIVIL — STATE OF CALIFORNIA

The State of California or its officers or agents shall not be responsible for the accuracy or completeness of electronic copies of this plan sheet.

T.Y. LIN / MOFFATT & NICHOL
825 BATTERY STREET
SAN FRANCISCO, CA 94111

To get to the web site, go to: http://www.dot.ca.gov

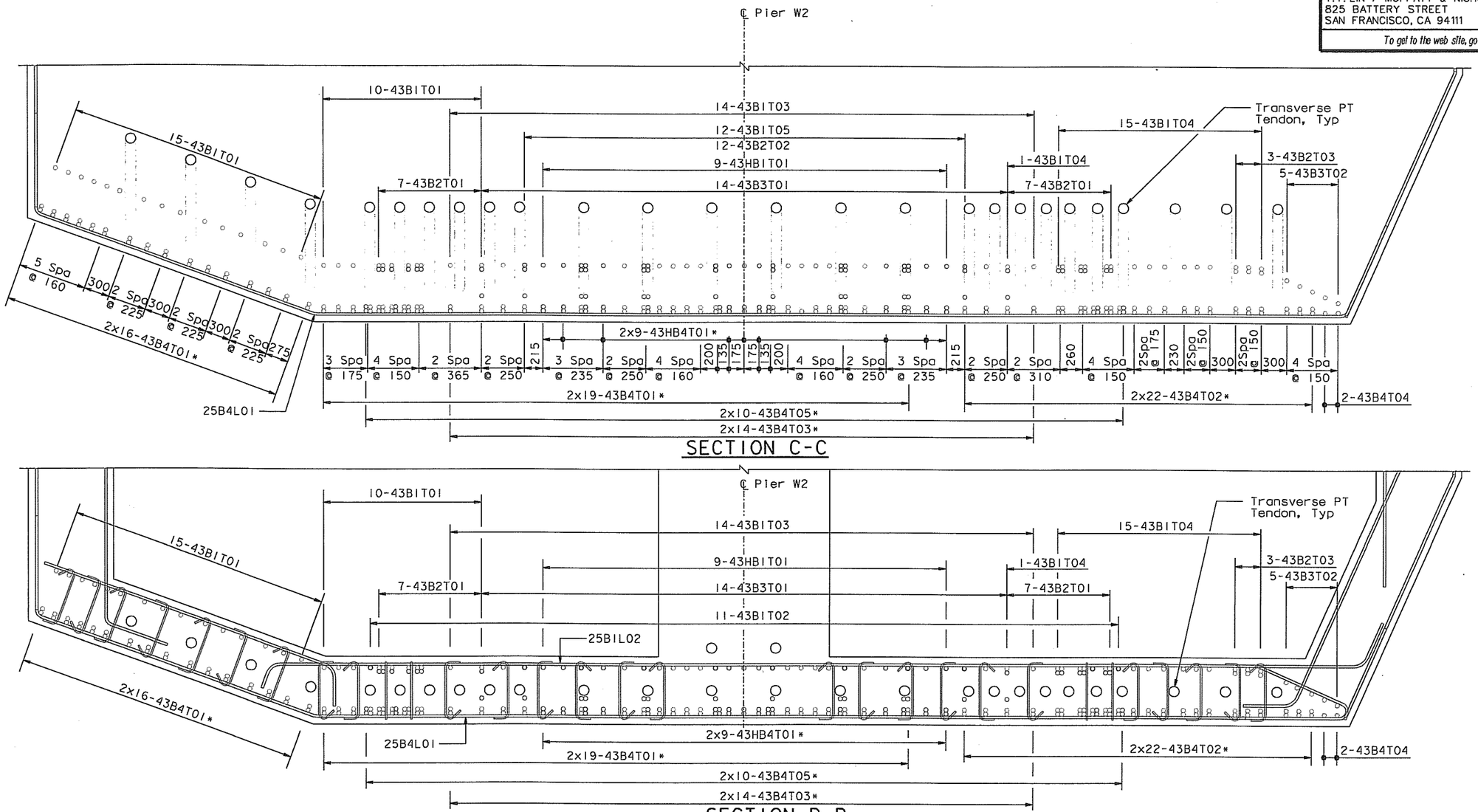

SECTION C-C

SECTION D-D

BOTTOM MAT REINFORCEMENT

(North Side shown, South Side similar)

1:25

* Denotes Bars Bundled Vertically

ALL DIMENSIONS ARE IN MILLIMETERS UNLESS OTHERWISE SHOWN

100 % PS&E

Original Sheet Superseded

DATE PLOTTED => 07 JUN 2007 TIME PLOTTED => 14:38:38

USERNAME => ptran

R. Valizadeh/V. Toan/Y. L./W. L./F. C.
DESIGN OVERSIGHT
SIGN OFF DATE 07/21/06

	BY	CHECKED
DESIGN	J. Sun	M. Chen
DETAILS	J. Duxbury	M. Chen
QUANTITIES	S. Shi	D. Harrison

PREPARED FOR THE STATE OF CALIFORNIA DEPARTMENT OF TRANSPORTATION

R. Manzanarez
PROJECT ENGINEER

BRIDGE NO.	34-0006L/R
KILOMETER POST	13.2/13.9

SAN FRANCISCO OAKLAND BAY BRIDGE
EAST SPAN SEISMIC SAFETY PROJECT
SELF-ANCHORED SUSPENSION BRIDGE (SUPERSTRUCTURE & TOWER)

W2 CAP BEAM REINFORCEMENT DETAILS NO. 17

Rev. Date: 5-18-98

ORIGINAL SCALE IN MILLIMETERS FOR REDUCED PLANS 0 10 20 30 40 50 60 70 80 90 100

CU 04
EA 0120F1

DISREGARD PRINTS BEARING EARLIER REVISION DATES →

REVISION DATES (PRELIMINARY STAGE ONLY)										SHEET	OF
05/31/01	01/07/02	07/31/02	12/19/02							073R1	

FILE => I:\bb\04-012001\sos\contract plans and cco\cco\cco#23\dgn\aecap16r-c.dgn

MARK	DATE	DESCRIPTIONS	BY	CH'D	CCO#
1	07/21/06	W2 CAP BEAM ISD	JD	AS	23

REVISIONS

CONTRACT CHANGE ORDER NO. 23
SHEET 42 OF 102

FOR REVISIONS ONLY

NOTES:

1. East face and West face reinforcement not shown for clarity. See "W2 Cap Beam Reinforcement Details No. 19 to No. 25" sheets.
2. Diaphragm reinforcement not shown for clarity. See "W2 Cap Beam Reinforcement Details No. 26 to No. 29" sheets.
3. For spacing see "W2 Cap Beam Reinforcement Details No. 17" sheet.

DIST.	COUNTY	ROUTE	KILOMETER POST TOTAL PROJECT	SHEET NO.	TOTAL SHEETS
04	SF	80	13.2/13.9	491R1	1204

REGISTERED ENGINEER - CIVIL
12-6-04
PLANS APPROVAL DATE

The State of California or its officers or agents shall not be responsible for the accuracy or completeness of electronic copies of this plan sheet.

T.Y. LIN / MOFFATT & NICHOL
825 BATTERY STREET
SAN FRANCISCO, CA 94111

To get to the web site, go to: http://www.dot.ca.gov

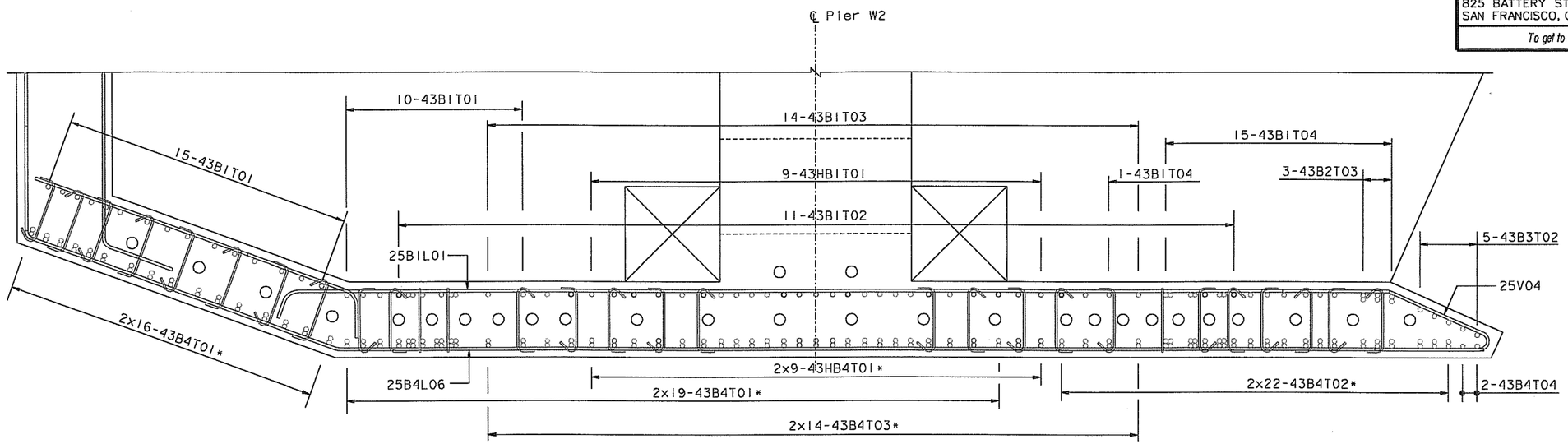

SECTION E-E
BOTTOM MAT REINFORCEMENT
(North Side shown, South Side similar)
1:25

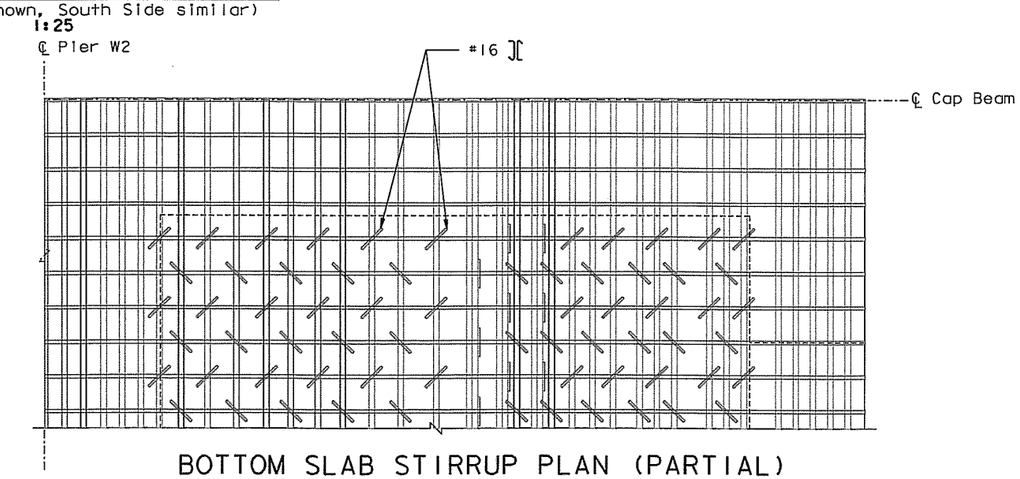

BOTTOM SLAB STIRRUP PLAN (PARTIAL)
NTS

Original Sheet Superseded

100 % PS&E

* Denotes Bars Bundled Vertically

ALL DIMENSIONS ARE IN MILLIMETERS UNLESS OTHERWISE SHOWN

R. Valizadeh/V. Toan/Y.L./W.L./F.C.
DESIGN OVERSIGHT
SIGN OFF DATE 07/21/06

	BY	CHECKED
DESIGN	J. Sun	M. Chen
DETAILS	J. Duxbury	M. Chen
QUANTITIES	S. Shi	D. Harrison

PREPARED FOR THE STATE OF CALIFORNIA DEPARTMENT OF TRANSPORTATION

R. Manzanarez
PROJECT ENGINEER

BRIDGE NO. 34-0006L/R
KILOMETER POST 13.2/13.9

SAN FRANCISCO OAKLAND BAY BRIDGE
EAST SPAN SEISMIC SAFETY PROJECT
SELF-ANCHORED SUSPENSION BRIDGE
(SUPERSTRUCTURE & TOWER)

W2 CAP BEAM REINFORCEMENT DETAILS NO. 18

Rev. Date: 5-18-98

ORIGINAL SCALE IN MILLIMETERS FOR REDUCED PLANS 0 10 20 30 40 50 60 70 80 90 100

CU 04
EA 0120F1

DISREGARD PRINTS BEARING EARLIER REVISION DATES

REVISION DATES (PRELIMINARY STAGE ONLY) 05/31/01 04/08/02 07/01/02 12/19/02

SHEET 074R1 OF

FILE => I:\bb\04-012001\sas\contract plans and cco\cco\cco#23\dgn\aecap17r-c.dgn

USERNAME => ptom DATE PLOTTED => 07 JUN 2007 TIME PLOTTED => 14:39:37

MARK	DATE	DESCRIPTIONS	BY	CH'D	CCO#
1	07/21/06	W2 CAP BEAM ISD	JD	AS	23

REVISIONS

CONTRACT CHANGE ORDER NO. 23
SHEET 43 OF 102

FOR REVISIONS ONLY

NOTES:

1. For Section A-A and B-B, see "W2 Cap Beam Reinforcement Details No.22" sheet.
2. All reinforcement placed parallel to soffit.

DIST.	COUNTY	ROUTE	KILOMETER POST TOTAL PROJECT	SHEET NO.	TOTAL SHEETS
04	SF	80	13.2/13.9	492R1	1204

REGISTERED ENGINEER - CIVIL

12-6-04
PLANS APPROVAL DATE

The State of California or its officers or agents shall not be responsible for the accuracy or completeness of electronic copies of this plan sheet.

T.Y. LIN / MOFFATT & NICHOL
825 BATTERY STREET
SAN FRANCISCO, CA 94111

To get to the web site, go to: http://www.dot.ca.gov

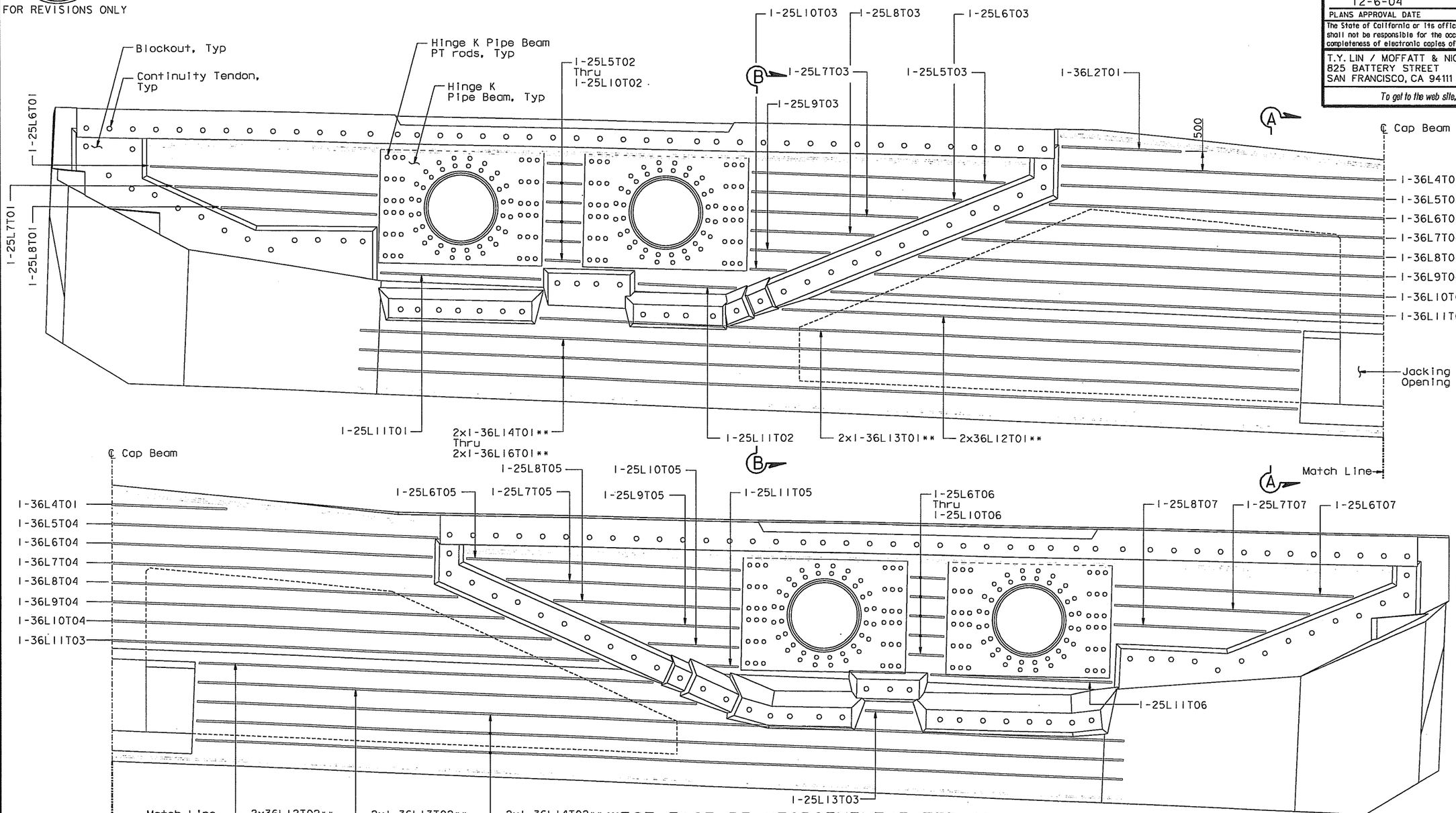

** Denotes Bars Bundled Horizontally

WEST FACE REINFORCEMENT (EXTERIOR)
(Looking East)
1:50

ALL DIMENSIONS ARE IN MILLIMETERS UNLESS OTHERWISE SHOWN

Original Sheet Superseded

100 % PS&E

R. Valizadeh/V. Toan/Y.L./W.L./F.C.
DESIGN OVERSIGHT
SIGN OFF DATE 07/21/06

	BY	CHECKED
DESIGN	J. Sun	M. Chen
DETAILS	J. Duxbury	M. Chen
QUANTITIES	S. Shi	D. Harrison

PREPARED FOR THE STATE OF CALIFORNIA DEPARTMENT OF TRANSPORTATION

R. Manzanarez
PROJECT ENGINEER

BRIDGE NO. 34-0006L/R
KILOMETER POST 13.2/13.9

SAN FRANCISCO OAKLAND BAY BRIDGE
EAST SPAN SEISMIC SAFETY PROJECT
SELF-ANCHORED SUSPENSION BRIDGE
(SUPERSTRUCTURE & TOWER)

W2 CAP BEAM REINFORCEMENT DETAILS NO. 19

Rev. Date: 5-18-98

ORIGINAL SCALE IN MILLIMETERS FOR REDUCED PLANS 0 10 20 30 40 50 60 70 80 90 100

CU 04
EA 0120F1

DISREGARD PRINTS BEARING EARLIER REVISION DATES

REVISION DATES (PRELIMINARY STAGE ONLY) 05/31/01 04/08/02 07/01/02 12/19/02

SHEET 075R1 OF

FILE => I:\bb\04-012001\sas\contract plans and cco\cco\cco#23\dgn\aecap18r-c.dgn

USERNAME => ptom DATE PLOTTED => 07 JUN 2007 TIME PLOTTED => 14:40:46

REGISTERED PROFESSIONAL ENGINEER — James P. Duxbury — No. C 64677 — Exp. 06/30/07 — CIVIL — STATE OF CALIFORNIA

FOR REVISIONS ONLY

MARK	DATE	DESCRIPTIONS	BY	CH'D	CCO#
1	07/21/06	W2 CAP BEAM ISD	JD	AS	23

REVISIONS

CONTRACT CHANGE ORDER NO. 23

SHEET 44 OF 102

NOTES:

1. For Section A-A and B-B, see "W2 Cap Beam Reinforcement Details No.22" sheet.
2. Reinforcement labeled "T23" and "T25" placed parallel to deck; other placed parallel to soffit, as shown.

Caltrans Metric

DIST.	COUNTY	ROUTE	KILOMETER POST TOTAL PROJECT	SHEET NO.	TOTAL SHEETS
04	SF	80	13.2/13.9	493RI	1204

REGISTERED ENGINEER - CIVIL

12-6-04

PLANS APPROVAL DATE

REGISTERED PROFESSIONAL ENGINEER — John Sun — No. C 54648 — Exp. 12/31/05 — CIVIL — STATE OF CALIFORNIA

The State of California or its officers or agents shall not be responsible for the accuracy or completeness of electronic copies of this plan sheet.

T.Y. LIN / MOFFATT & NICHOL
825 BATTERY STREET
SAN FRANCISCO, CA 94111

To get to the web site, go to: http://www.dot.ca.gov

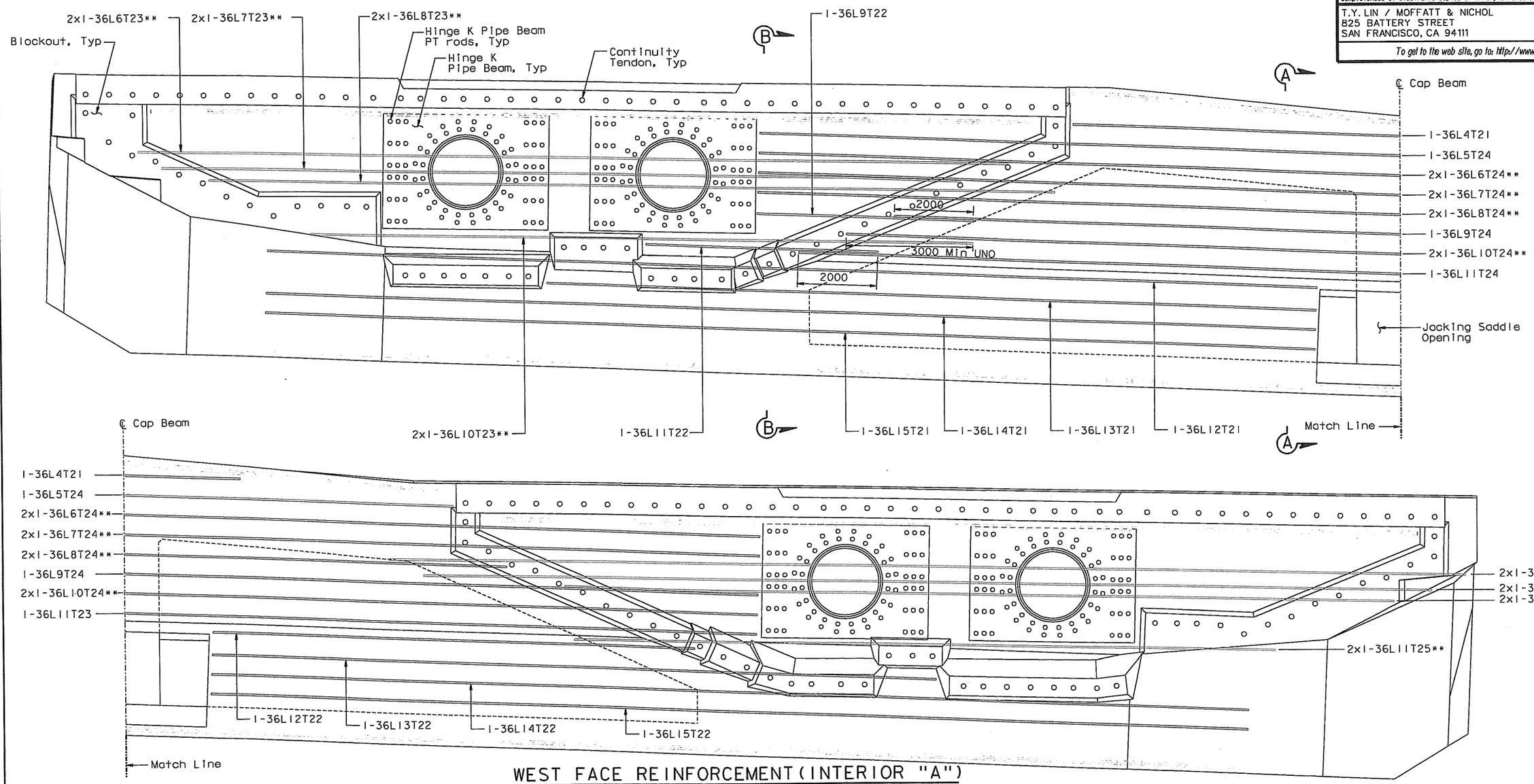

WEST FACE REINFORCEMENT (INTERIOR "A")

(Looking East)

1:50

** Denotes Bars Bundled Horizontally

ALL DIMENSIONS ARE IN MILLIMETERS UNLESS OTHERWISE SHOWN

Original Sheet Superseded

100 % PS&E

DATE PLOTTED => 07 JUN 2007 TIME PLOTTED => 14:41:48

USERNAME => ptom

R. Valizadeh/V. Toan/Y.L./W.L./F.C.
DESIGN OVERSIGHT
SIGN OFF DATE 07/21/06

	BY	CHECKED
DESIGN	J. Sun	M. Chen
DETAILS	J. Duxbury	M. Chen
QUANTITIES	S. Shi	D. Harrison

PREPARED FOR THE STATE OF CALIFORNIA DEPARTMENT OF TRANSPORTATION

R. Manzanarez
PROJECT ENGINEER

CU 04
EA 0120F1

BRIDGE NO. 34-0006L/R
KILOMETER POST 13.2/13.9

SAN FRANCISCO OAKLAND BAY BRIDGE
EAST SPAN SEISMIC SAFETY PROJECT
SELF-ANCHORED SUSPENSION BRIDGE
(SUPERSTRUCTURE & TOWER)

W2 CAP BEAM REINFORCEMENT DETAILS NO. 20

DISREGARD PRINTS BEARING EARLIER REVISION DATES

REVISION DATES (PRELIMINARY STAGE ONLY): 05/27/01 | 04/09/02 | 07/09/02 | 12/19/02

SHEET 076RI OF

ORIGINAL SCALE IN MILLIMETERS FOR REDUCED PLANS 0 10 20 30 40 50 60 70 80 90 100

Rev. Date: 5-18-98

FILE => I:\bb\04-0120I\sas\contract plans and cco\cco\cco#23\dgn\aecap19r-c.dgn

MARK	DATE	DESCRIPTIONS	BY	CH'D	CCO#
1	07/21/06	W2 CAP BEAM ISD	JD	AS	23

REVISIONS

CONTRACT CHANGE ORDER NO. 23

SHEET 45 OF 102

FOR REVISIONS ONLY

NOTES:

1. For Section B-B, see "W2 Cap Beam Reinforcement Details No.22" sheet.
2. Reinforcement labeled "T33" and "T35" placed parallel to deck.

Caltrans Metric

DIST.	COUNTY	ROUTE	KILOMETER POST TOTAL PROJECT	SHEET NO.	TOTAL SHEETS
04	SF	80	13.2/13.9	494RI	1204

REGISTERED ENGINEER - CIVIL

12-6-04

PLANS APPROVAL DATE

The State of California or its officers or agents shall not be responsible for the accuracy or completeness of electronic copies of this plan sheet.

T.Y. LIN / MOFFATT & NICHOL
825 BATTERY STREET
SAN FRANCISCO, CA 94111

To get to the web site, go to: http://www.dot.ca.gov

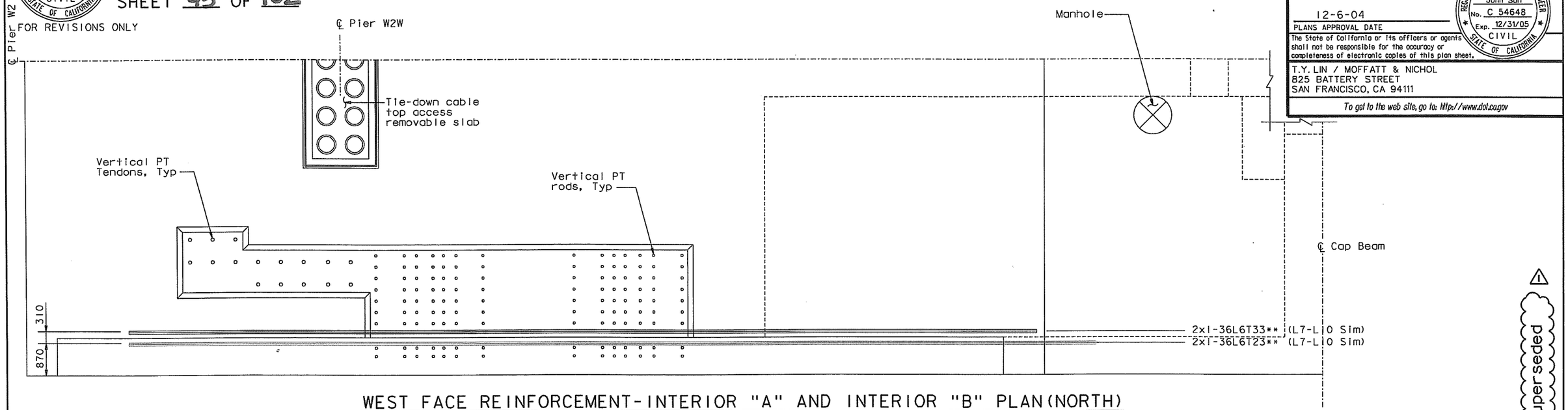

WEST FACE REINFORCEMENT-INTERIOR "A" AND INTERIOR "B" PLAN(NORTH)

(Looking East)(South Side Similar)

1:50

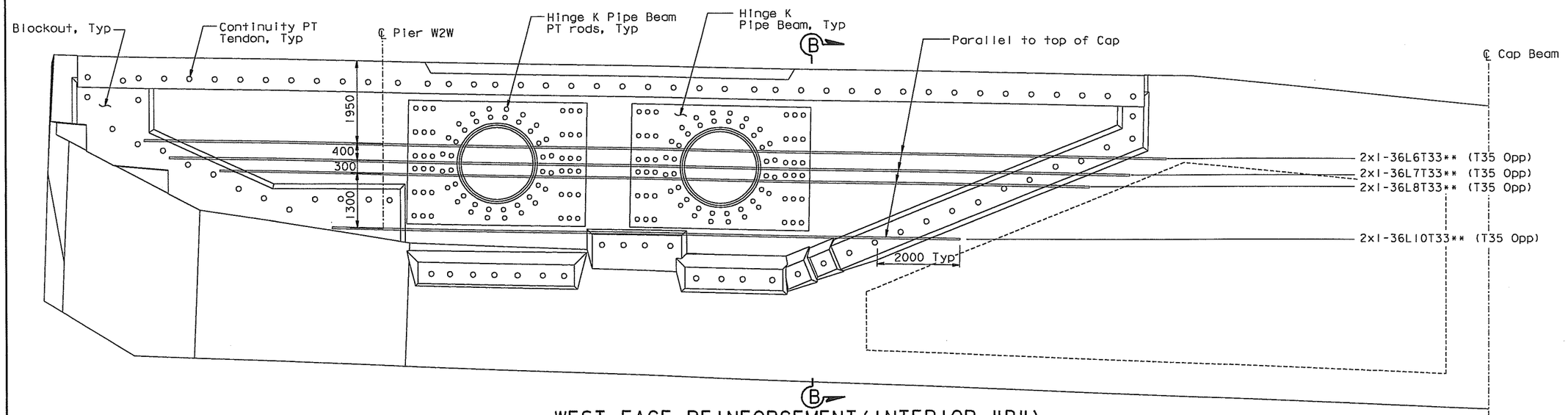

B

WEST FACE REINFORCEMENT (INTERIOR "B")

(Looking East)(South Side Similar)

1:50

** Denotes Bars Bundled Horizontally

ALL DIMENSIONS ARE IN MILLIMETERS UNLESS OTHERWISE SHOWN

Original Sheet Superseded

100 % PS&E

DATE PLOTTED => 07 JUN 2007 TIME PLOTTED => 14:42:47

USERNAME => ptam

R. Valizadeh/V. Toan/Y.L./W.L./F.C.
DESIGN OVERSIGHT
Reza Valizadeh /s/ Vong Toan / Y. Liu
SIGN OFF DATE 07/21/06

	BY	CHECKED
DESIGN	J. Sun	M. Chen
DETAILS	J. Duxbury	M. Chen
QUANTITIES	S. Shi	D. Harrison

PREPARED FOR THE STATE OF CALIFORNIA DEPARTMENT OF TRANSPORTATION

R. Manzanarez
PROJECT ENGINEER

CU 04
EA 0120F1

BRIDGE NO. 34-0006L/R
KILOMETER POST 13.2/13.9

SAN FRANCISCO OAKLAND BAY BRIDGE
EAST SPAN SEISMIC SAFETY PROJECT
SELF-ANCHORED SUSPENSION BRIDGE
(SUPERSTRUCTURE & TOWER)

W2 CAP BEAM REINFORCEMENT DETAILS NO. 21

Rev. Date: 5-18-98

ORIGINAL SCALE IN MILLIMETERS FOR REDUCED PLANS 0 10 20 30 40 50 60 70 80 90 100

DISREGARD PRINTS BEARING EARLIER REVISION DATES

REVISION DATES (PRELIMINARY STAGE ONLY)									SHEET	OF
05/17/01	01/07/02	07/07/02	12/19/02						077RI	

FILE => I:\bb\04-0120F1\sas\contract plans and cco\cco\cco#23\dgn\aecap20r-c.dgn

REGISTERED PROFESSIONAL ENGINEER — Jonathan P. Duxbury — No. C 64677 — Exp. 06/30/07 — CIVIL — STATE OF CALIFORNIA

FOR REVISIONS ONLY

MARK	DATE	DESCRIPTIONS	BY	CH'D	CCO#
1	07/21/06	W2 CAP BEAM ISD	JD	AS	23
		REVISIONS			

CONTRACT CHANGE ORDER NO. 23
SHEET 46 OF 102

NOTES:

1. Top mat reinforcement not shown for clarity. See "W2 Cap Beam Reinforcement Details No. 2 to No. 8" sheets.
2. Bottom mat reinforcement not shown for clarity. See "W2 Cap Beam Reinforcement Details No. 9 to No. 18" sheets.
3. Horizontal and vertical stirrup reinforcement not shown for clarity. See "W2 Cap Beam Reinforcement Details No. 40 to No. 43" sheets.

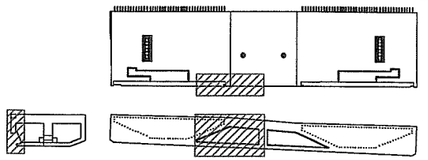

LOCATION KEY
NTS

Caltrans Metric

DIST.	COUNTY	ROUTE	KILOMETER POST TOTAL PROJECT	SHEET NO.	TOTAL SHEETS
04	SF	80	13.2/13.9	495RI	1204

REGISTERED ENGINEER - CIVIL

12-6-04
PLANS APPROVAL DATE

REGISTERED PROFESSIONAL ENGINEER — John Sun — No. C 54648 — Exp. 12/31/05 — CIVIL — STATE OF CALIFORNIA

The State of California or its officers or agents shall not be responsible for the accuracy or completeness of electronic copies of this plan sheet.

T.Y. LIN / MOFFATT & NICHOL
825 BATTERY STREET
SAN FRANCISCO, CA 94111

To get to the web site, go to: http://www.dot.ca.gov

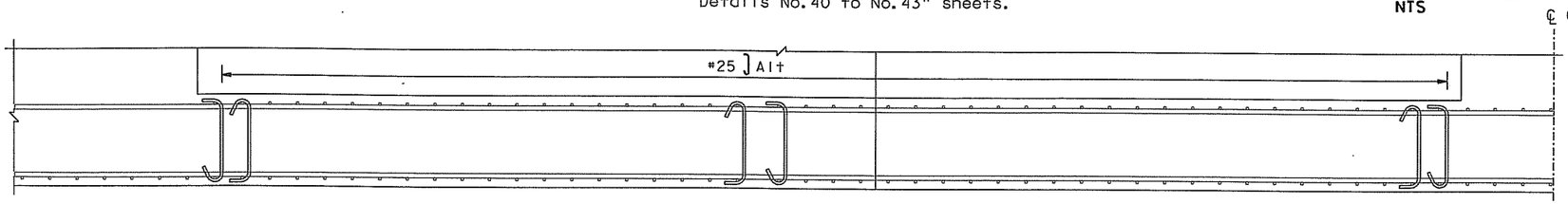

WEST FACE REINFORCEMENT-EXTERIOR AND INTERIOR A PLAN (NORTH)

(North Side Shown, South Side Similar)
1:30

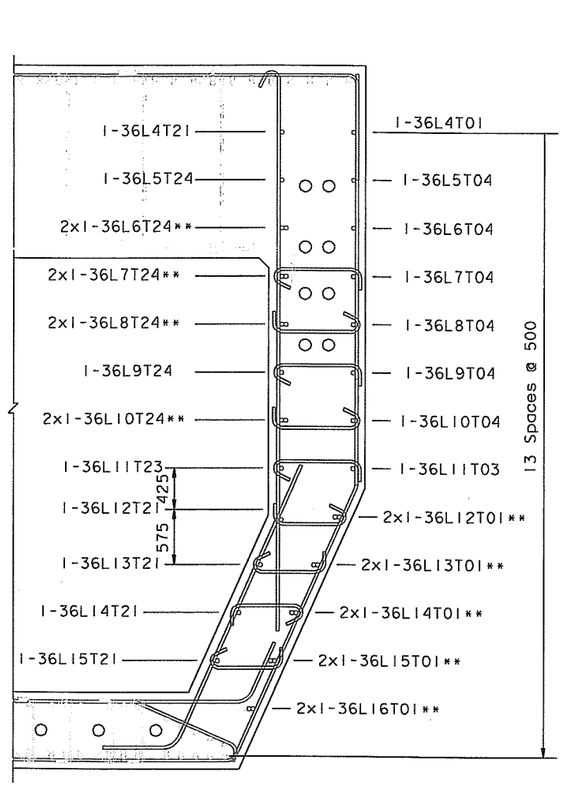

SECTION A-A

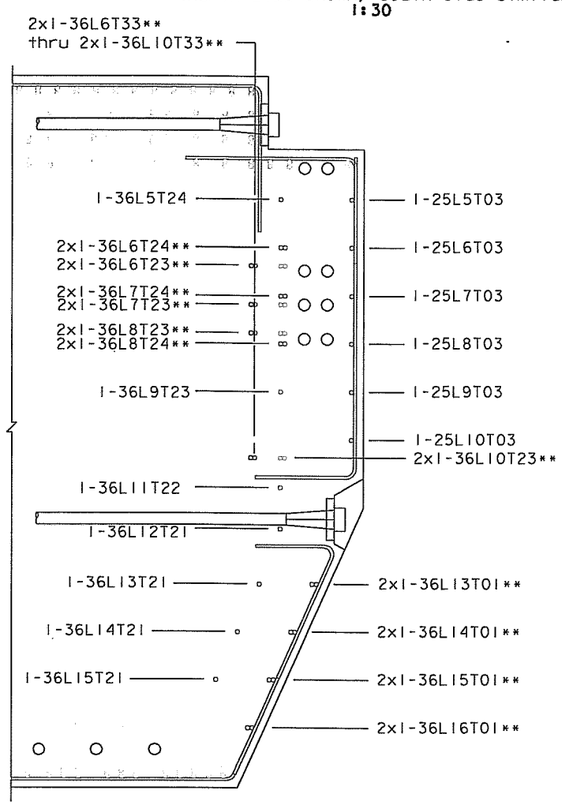

SECTION B-B

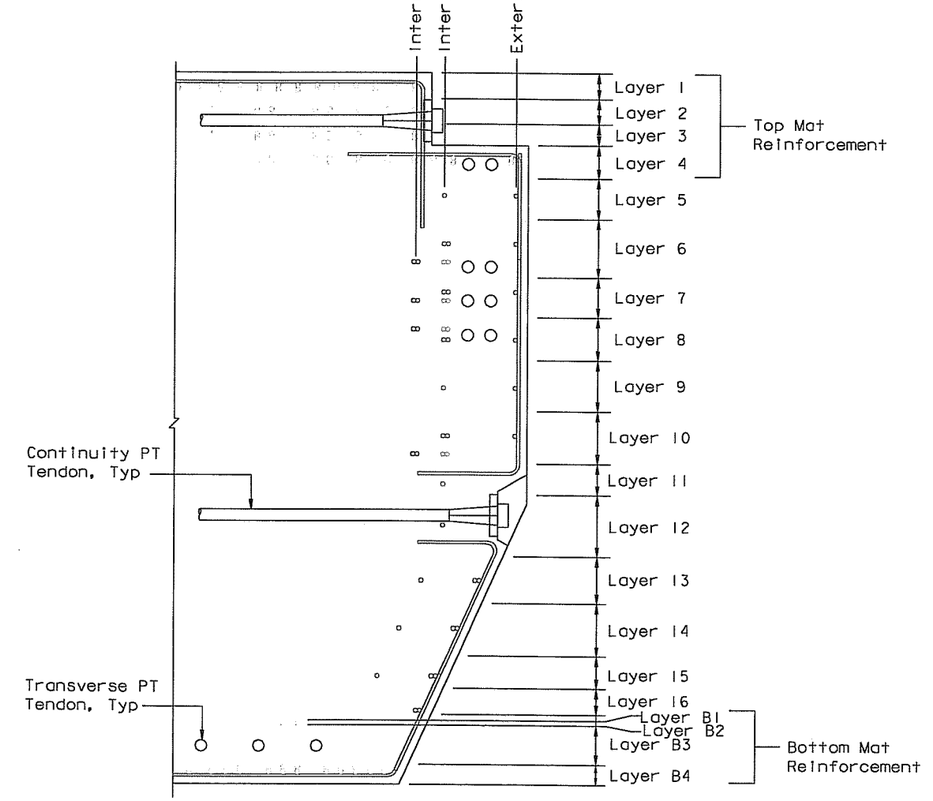

LAYER ID

WEST FACE REINFORCEMENT

(North Side Shown, South Side Similar)
1:30

** Denotes Bars Bundled Horizontally

ALL DIMENSIONS ARE IN MILLIMETERS UNLESS OTHERWISE SHOWN

Original Sheet Superseded

100% PS&E

DATE PLOTTED => 07 JUN 2007
TIME PLOTTED => 14:43:52
USERNAME => ptom

R. Valizadeh/V. Toan/Y.L./W.L./F.C.
DESIGN OVERSIGHT
SIGN OFF DATE 07/21/06

	BY	CHECKED
DESIGN	J. Sun	M. Chen
DETAILS	J. Duxbury	M. Chen
QUANTITIES	S. Shi	D. Harrison

PREPARED FOR THE STATE OF CALIFORNIA
DEPARTMENT OF TRANSPORTATION

R. Manzanarez
PROJECT ENGINEER

BRIDGE NO. 34-0006L/R
KILOMETER POST 13.2/13.9

SAN FRANCISCO OAKLAND BAY BRIDGE
EAST SPAN SEISMIC SAFETY PROJECT
SELF-ANCHORED SUSPENSION BRIDGE
(SUPERSTRUCTURE & TOWER)

W2 CAP BEAM REINFORCEMENT DETAILS NO. 22

Rev. Date: 5-18-98

ORIGINAL SCALE IN MILLIMETERS FOR REDUCED PLANS 0 10 20 30 40 50 60 70 80 90 100

CU 04
EA 0120F1

DISREGARD PRINTS BEARING EARLIER REVISION DATES →

REVISION DATES (PRELIMINARY STAGE ONLY)										SHEET	OF
05/31/01	04/09/02	07/09/02	12/19/02							078RI	

FILE => I:\bb\04-012001\sas\contract plans and cco\cco\cco#23\dgn\aecap2lr-c.dgn

MARK	DATE	DESCRIPTIONS	BY	CH'D	CCO#
1	07/21/06	W2 CAP BEAM ISD	JD	AS	23

REVISIONS

CONTRACT CHANGE ORDER NO. 23
SHEET 47 OF 102

FOR REVISIONS ONLY

NOTES:

1. For Section C-C and D-D, see "W2 Cap Beam Reinforcement Details No.25" sheet.

DIST.	COUNTY	ROUTE	KILOMETER POST TOTAL PROJECT	SHEET NO.	TOTAL SHEETS
04	SF	80	13.2/13.9	496R1	1204

REGISTERED ENGINEER - CIVIL

12-6-04
PLANS APPROVAL DATE

The State of California or its officers or agents shall not be responsible for the accuracy or completeness of electronic copies of this plan sheet.

T.Y. LIN / MOFFATT & NICHOL
825 BATTERY STREET
SAN FRANCISCO, CA 94111

To get to the web site, go to: http://www.dot.ca.gov

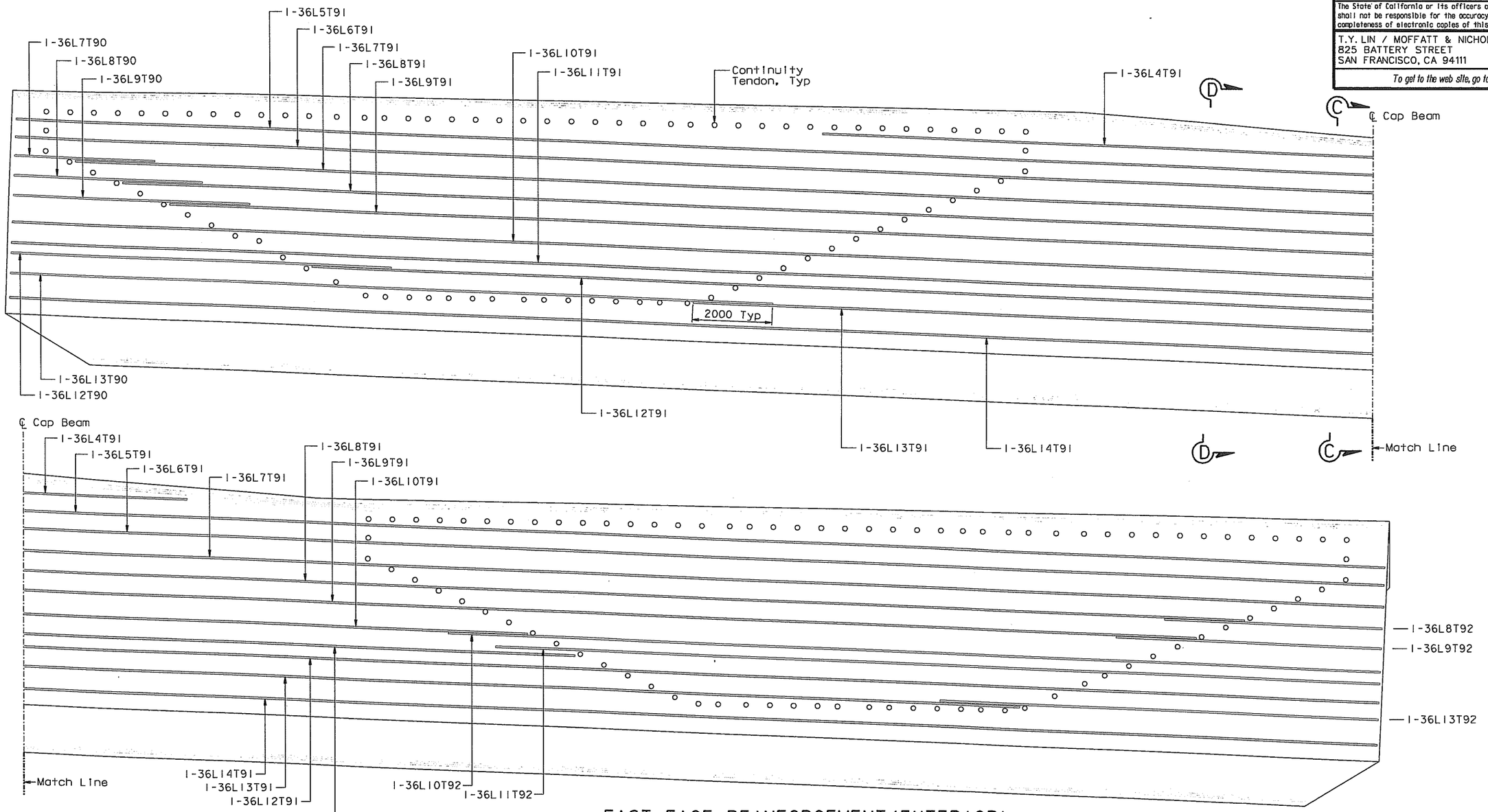

EAST FACE REINFORCEMENT (EXTERIOR)
(Looking East)
1:50

ALL DIMENSIONS ARE IN MILLIMETERS UNLESS OTHERWISE SHOWN

Original Sheet Superseded

100 % PS&E

DATE PLOTTED => 07 JUN 2007 TIME PLOTTED => 14:50:59

USERNAME => ptom

R. Valizadeh/V. Toan/Y.L./W.L./F.C.
DESIGN OVERSIGHT
SIGN OFF DATE 07/21/06

	BY	CHECKED
DESIGN	J. Sun	M. Chen
DETAILS	J. Duxbury	M. Chen
QUANTITIES	S. Shi	D. Harrison

PREPARED FOR THE STATE OF CALIFORNIA DEPARTMENT OF TRANSPORTATION

R. Manzanarez
PROJECT ENGINEER

BRIDGE NO. 34-0006L/R
KILOMETER POST 13.2/13.9

SAN FRANCISCO OAKLAND BAY BRIDGE
EAST SPAN SEISMIC SAFETY PROJECT
SELF-ANCHORED SUSPENSION BRIDGE
(SUPERSTRUCTURE & TOWER)

W2 CAP BEAM REINFORCEMENT DETAILS NO. 23

Rev. Date: 5-18-98

ORIGINAL SCALE IN MILLIMETERS FOR REDUCED PLANS 0 10 20 30 40 50 60 70 80 90 100

CU 04
EA 0120F1

DISREGARD PRINTS BEARING EARLIER REVISION DATES

REVISION DATES (PRELIMINARY STAGE ONLY) 05/31/01 04/08/02 07/01/02 12/19/02

SHEET 079R1 OF

FILE => I:\bb\04-012001\sas\contract plans and cco\cco\cco#23\dgn\aecap23r-c.dgn

MARK	DATE	DESCRIPTIONS	BY	CH'D	CCO#
1	07/21/06	W2 CAP BEAM ISD	JD	AS	23

REVISIONS

CONTRACT CHANGE ORDER NO. 23
SHEET 48 OF 102

FOR REVISIONS ONLY

REGISTERED PROFESSIONAL ENGINEER James P. Duxbury No. C 64677 Exp. 06/30/07 CIVIL STATE OF CALIFORNIA

NOTES:

1. For Section C-C and D-D, see "W2 Cap Beam Reinforcement Details No.25" sheet.

Caltrans Metric

DIST.	COUNTY	ROUTE	KILOMETER POST TOTAL PROJECT	SHEET NO.	TOTAL SHEETS
04	SF	80	13.2/13.9	497R1	1204

REGISTERED ENGINEER - CIVIL

12-6-04
PLANS APPROVAL DATE

REGISTERED PROFESSIONAL ENGINEER John Sun No. C 54648 Exp. 12/31/05 CIVIL STATE OF CALIFORNIA

The State of California or its officers or agents shall not be responsible for the accuracy or completeness of electronic copies of this plan sheet.

T.Y. LIN / MOFFATT & NICHOL
825 BATTERY STREET
SAN FRANCISCO, CA 94111

To get to the web site, go to: http://www.dot.ca.gov

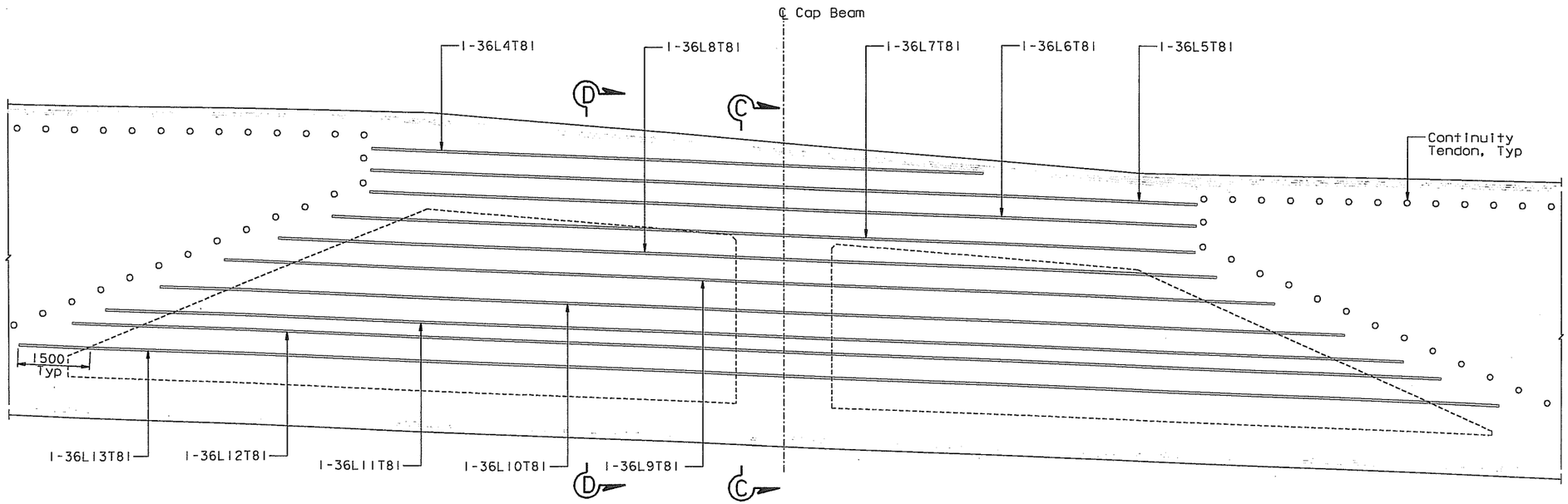

EAST FACE REINFORCEMENT (INTERIOR)
(Looking East)
1:50

Original Sheet Superseded

100 % PS&E

ALL DIMENSIONS ARE IN MILLIMETERS UNLESS OTHERWISE SHOWN

R. Valizadeh/V. Toan/Y.L./W.L./F.C.
DESIGN OVERSIGHT
Reza Valizadeh / Vong Toan / Y. Liu
SIGN OFF DATE 07/21/06

	BY	CHECKED
DESIGN	J. Sun	M. Chen
DETAILS	J. Duxbury	M. Chen
QUANTITIES	S. Shi	D. Harrison

PREPARED FOR THE STATE OF CALIFORNIA DEPARTMENT OF TRANSPORTATION

R. Manzanarez
PROJECT ENGINEER

BRIDGE NO. 34-0006L/R
KILOMETER POST 13.2/13.9

SAN FRANCISCO OAKLAND BAY BRIDGE
EAST SPAN SEISMIC SAFETY PROJECT
SELF-ANCHORED SUSPENSION BRIDGE
(SUPERSTRUCTURE & TOWER)

W2 CAP BEAM REINFORCEMENT DETAILS NO. 24

Rev. Date: 5-18-98

ORIGINAL SCALE IN MILLIMETERS FOR REDUCED PLANS 0 10 20 30 40 50 60 70 80 90 100

CU 04
EA 0120F1

DISREGARD PRINTS BEARING EARLIER REVISION DATES

REVISION DATES (PRELIMINARY STAGE ONLY) 05/31/01 04/08/02 07/01/02 12/19/02

SHEET 080R1 OF

FILE => I:\bb\04-012001\sas\contract plans and cco\cco\cco#23\dgn\aecap22r-c.dgn

USERNAME => ptom DATE PLOTTED => 07 JUN 2007 TIME PLOTTED => 14:53:31

NOTES:

1. Top mat reinforcement not shown for clarity. See "W2 Cap Beam Reinforcement Details No. 2 to No. 8" sheets.
2. Bottom mat reinforcement not shown for clarity. See "W2 Cap Beam Reinforcement Details No. 9 to No. 18" sheets.
3. Horizontal and vertical stirrup reinforcement not shown for clarity. See "W2 Cap Beam Reinforcement Details No. 40 to No. 43" sheets.

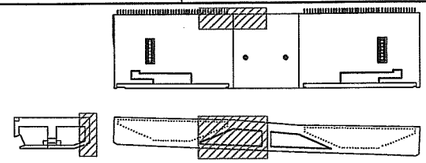

LOCATION KEY
NTS

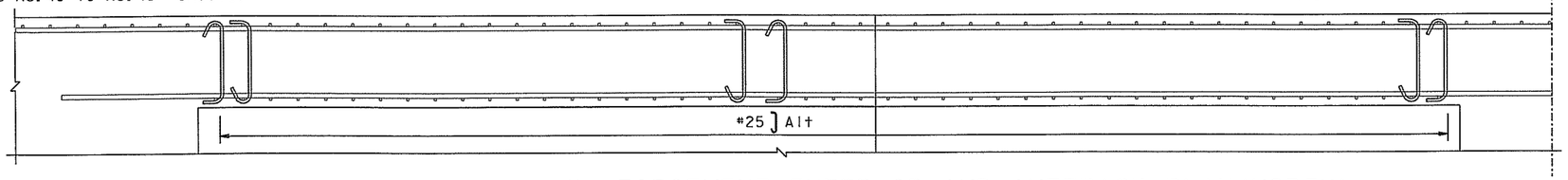

EAST FACE REINFORCEMENT-EXTERIOR AND INTERIOR PLAN(NORTH)

(North Side Shown, South Side Similar)
1:30

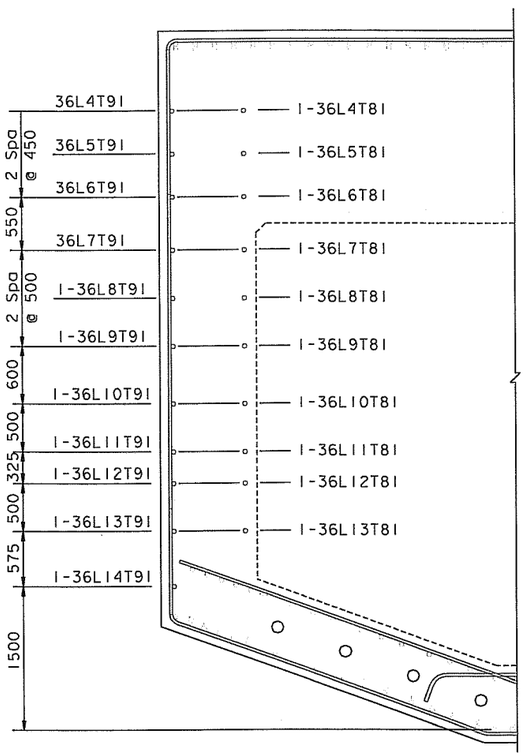

SECTION C-C

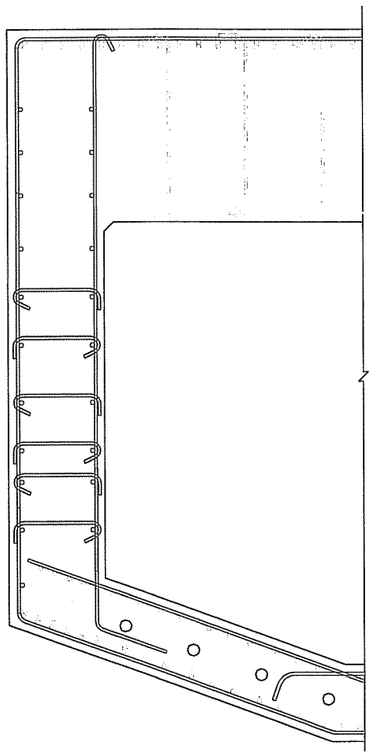

SECTION D-D

EAST FACE REINFORCEMENT
(North Side Shown, South Side Similar)
1:30

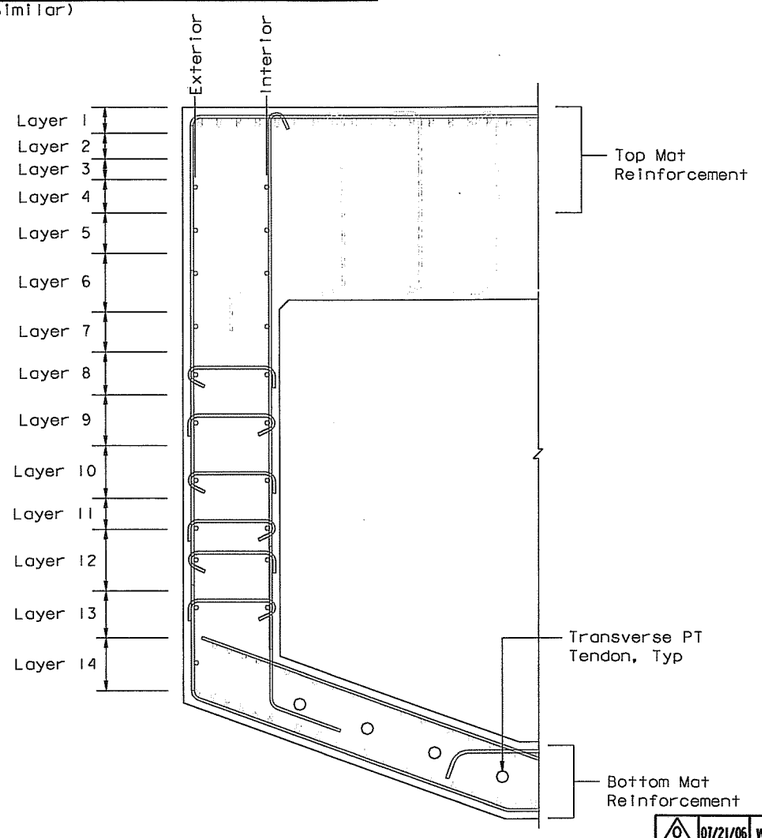

LAYER ID

ALL DIMENSIONS ARE IN MILLIMETERS UNLESS OTHERWISE SHOWN

DIST.	COUNTY	ROUTE	KILOMETER POST TOTAL PROJECT	SHEET NO.	TOTAL SHEETS
04	SF	80	13.2/13.9	497SI	1204

REGISTERED ENGINEER - CIVIL
07-21-06
PLANS APPROVAL DATE

REGISTERED PROFESSIONAL ENGINEER James P. Duxbury No. C 64677 Exp. 06/30/07 CIVIL STATE OF CALIFORNIA

The State of California or its officers or agents shall not be responsible for the accuracy or completeness of electronic copies of this plan sheet.

T.Y. LIN / MOFFATT & NICHOL
825 BATTERY STREET
SAN FRANCISCO, CA 94111

To get to the web site, go to: http://www.dot.ca.gov

MARK	DATE	REVISIONS DESCRIPTIONS	BY	CH'D	CCO#
0	01/21/06	W2 CAP BEAM ISD	JD	AS	23

CONTRACT CHANGE ORDER NO. 23
SHEET 49 OF 102

100 % PS&E

R. Vallzadeh/V. Toan/Y.L./W.L./F.C. DESIGN OVERSIGHT	DESIGN	BY J. Duxbury	CHECKED A. Sanjines	PREPARED FOR THE STATE OF CALIFORNIA DEPARTMENT OF TRANSPORTATION
Sign Off Date 07/21/06	DETAILS	BY J. Duxbury	CHECKED A. Sanjines	
Rev. Date: 5-18-98	QUANTITIES	BY N. Vo	CHECKED A. Sanjines	

R. Manzanarez
PROJECT ENGINEER

BRIDGE NO.	SAN FRANCISCO OAKLAND BAY BRIDGE EAST SPAN SEISMIC SAFETY PROJECT
34-0006L/R	SELF-ANCHORED SUSPENSION BRIDGE (SUPERSTRUCTURE & TOWER)
KILOMETER POST 13.2/13.9	W2 CAP BEAM REINFORCEMENT DETAILS NO. 25

ORIGINAL SCALE IN MILLIMETERS FOR REDUCED PLANS 0 10 20 30 40 50 60 70 80 90 100

CU 04
EA 0120F1

DISREGARD PRINTS BEARING EARLIER REVISION DATES →

REVISION DATES (PRELIMINARY STAGE ONLY)								SHEET	OF
01/21/06								08051	

FILE => I:\bb\04-0120I\sas\contract plans and cco\cco\cco#23\aecap24r-c.dgn

USERNAME => vlgnatovs DATE PLOTTED => 10 MAY 2007 TIME PLOTTED => 10:08:48

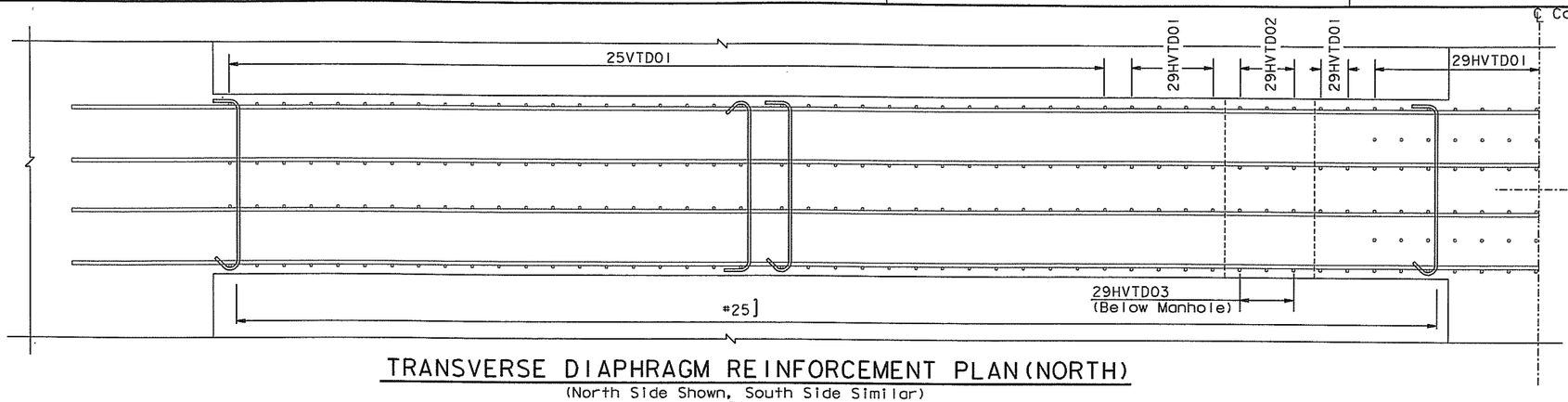

TRANSVERSE DIAPHRAGM REINFORCEMENT PLAN (NORTH)

(North Side Shown, South Side Similar)

1:30

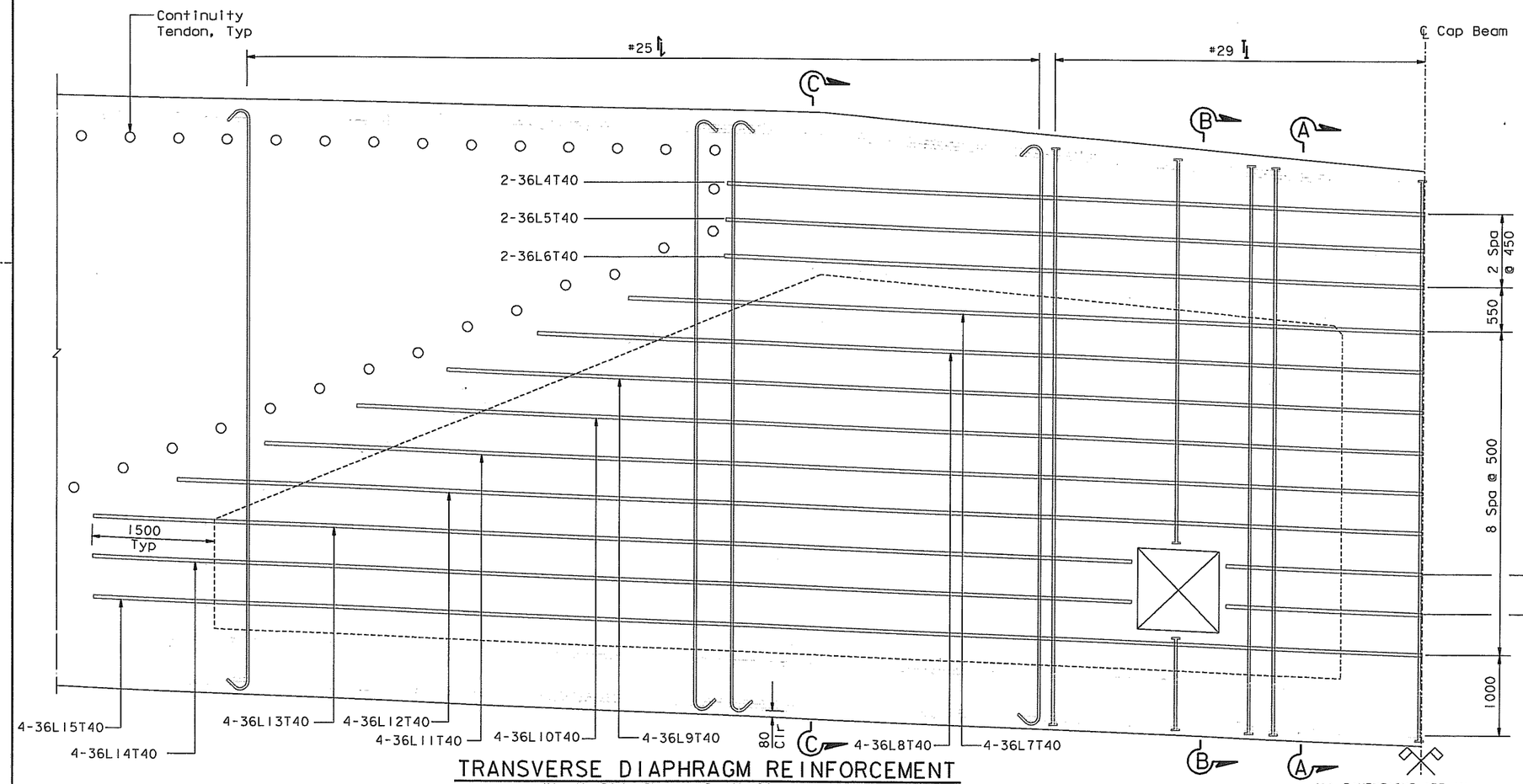

TRANSVERSE DIAPHRAGM REINFORCEMENT

(North Side Shown, South Side Similar)

1:30

ALL DIMENSIONS ARE IN MILLIMETERS UNLESS OTHERWISE SHOWN

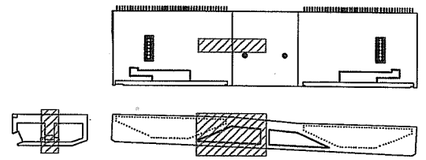

LOCATION KEY

NTS

NOTES:

1. For Section A-A thru C-C, see "W2 Cap Beam Reinforcement Details No. 27" sheet.

DIST.	COUNTY	ROUTE	KILOMETER POST TOTAL PROJECT	SHEET NO.	TOTAL SHEETS
04	SF	80	13.2/13.9	497S2	1204

REGISTERED ENGINEER - CIVIL

James P. Duxbury
No. C 64677
Exp. 06/30/07
CIVIL
STATE OF CALIFORNIA

07-21-06
PLANS APPROVAL DATE

The State of California or its officers or agents shall not be responsible for the accuracy or completeness of electronic copies of this plan sheet.

T.Y. LIN / MOFFATT & NICHOL
825 BATTERY STREET
SAN FRANCISCO, CA 94111

To get to the web site, go to: http://www.dot.ca.gov

MARK	DATE	REVISIONS DESCRIPTIONS	BY	CH'D	CCO#
0	07/21/06	W2 CAP BEAM ISD	JD	AS	23

CONTRACT CHANGE ORDER NO. 23
SHEET 50 OF 102

100% PS&E

DATE PLOTTED => 10 MAY 2007 TIME PLOTTED => 10:10:08
USERNAME => vignatovsk

R. Valizadeh/V. Toan/Y.L./W.L./F.C. DESIGN OVERSIGHT	DESIGN BY J. Duxbury	CHECKED A. Sanjines	PREPARED FOR THE STATE OF CALIFORNIA DEPARTMENT OF TRANSPORTATION
Roya Valiz /s/ Vong Toan / Y. Liu SIGN OFF DATE 07/21/06	DETAILS BY J. Duxbury	CHECKED A. Sanjines	
Rev. Date: 5-18-98	QUANTITIES BY N. Vo	CHECKED A. Sanjines	

R. Manzanarez
PROJECT ENGINEER

CU 04
EA 0120F1

BRIDGE NO. 34-0006L/R
KILOMETER POST 13.2/13.9

SAN FRANCISCO OAKLAND BAY BRIDGE
EAST SPAN SEISMIC SAFETY PROJECT
SELF-ANCHORED SUSPENSION BRIDGE
(SUPERSTRUCTURE & TOWER)

W2 CAP BEAM REINFORCEMENT DETAILS NO. 26

ORIGINAL SCALE IN MILLIMETERS FOR REDUCED PLANS 0 10 20 30 40 50 60 70 80 90 100

DISREGARD PRINTS BEARING EARLIER REVISION DATES

REVISION DATES (PRELIMINARY STAGE ONLY): 07/21/06

SHEET 080S2 OF

FILE => I:\bb\04-012001\sas\contract plans and cco\cco\cco#23\aecap25r-s.dgn

NOTES:

1. Top mat reinforcement not shown for clarity. See "W2 Cap Beam Reinforcement Details No. 2 to No. 8" sheets.
2. Bottom mat reinforcement not shown for clarity. See "W2 Cap Beam Reinforcement Details No. 9 to No. 18" sheets.
3. Jacking Saddle reinforcement not shown for clarity. See "W2 Cap Beam Reinforcement Details No. 30 to No. 33" sheets.
4. Horizontal and vertical stirrup reinforcement not shown for clarity. See "W2 Cap Beam Reinforcement Details No. 40 to No. 43" sheets.

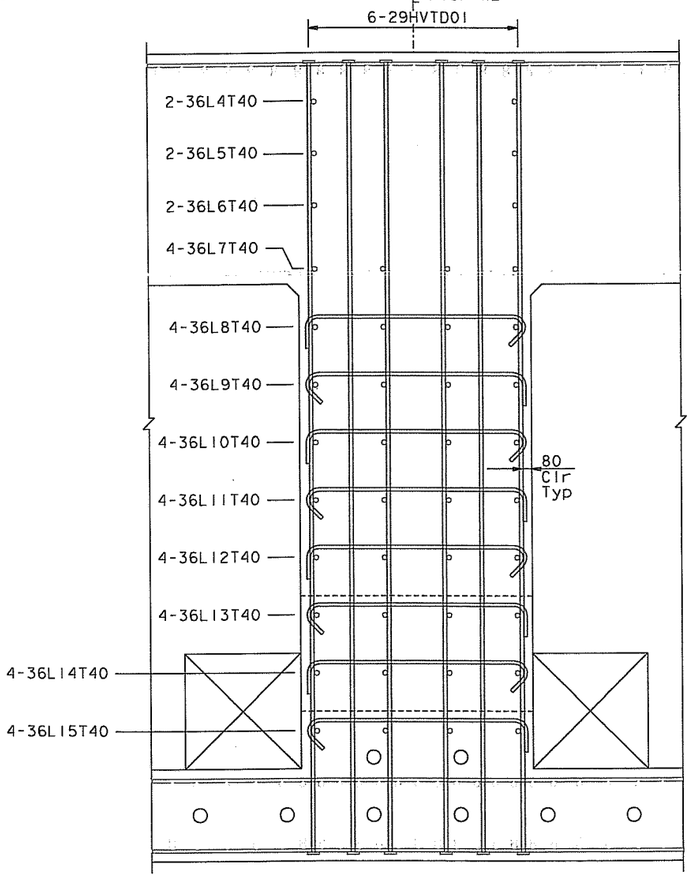

SECTION A-A

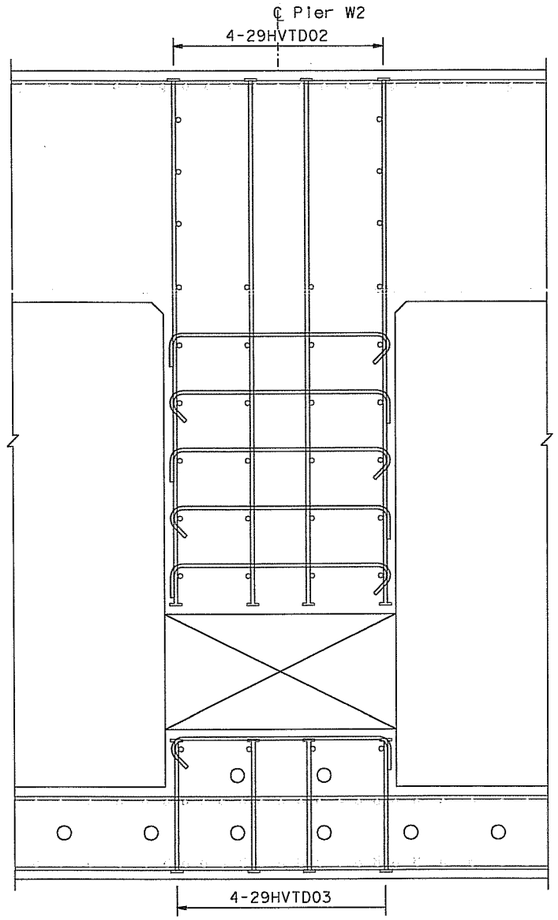

SECTION B-B

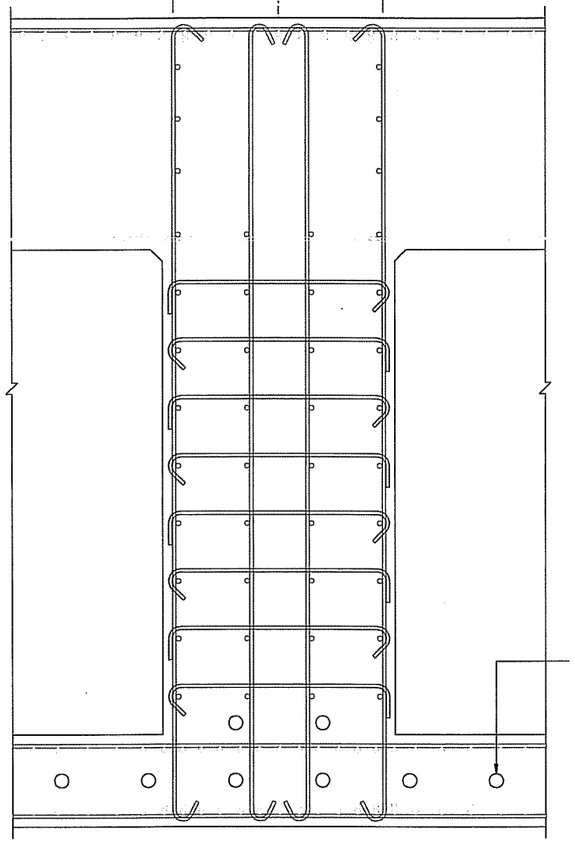

SECTION C-C

TRANSVERSE DIAPHRAGM REINFORCEMENT

(North Side Shown, South Side Similar)

1:30

ALL DIMENSIONS ARE IN MILLIMETERS UNLESS OTHERWISE SHOWN

DIST.	COUNTY	ROUTE	KILOMETER POST TOTAL PROJECT	SHEET NO.	TOTAL SHEETS
04	SF	80	13.2/13.9	497S3	1204

REGISTERED ~~ENGINEER~~ - CIVIL

James P. Duxbury

07-21-06

PLANS APPROVAL DATE

REGISTERED PROFESSIONAL ENGINEER — James P. Duxbury — No. C 64677 — Exp. 06/30/07 — CIVIL — STATE OF CALIFORNIA

The State of California or its officers or agents shall not be responsible for the accuracy or completeness of electronic copies of this plan sheet.

T.Y. LIN / MOFFATT & NICHOL
825 BATTERY STREET
SAN FRANCISCO, CA 94111

To get to the web site, go to: http://www.dot.ca.gov

MARK	DATE	REVISIONS DESCRIPTIONS	BY	CH'D	CCO#
0	07/21/06	W2 CAP BEAM ISD	JD	AS	23

CONTRACT CHANGE ORDER NO. 23

SHEET 51 OF 102

100 % PS&E

TIME PLOTTED => 10:48:37

DATE PLOTTED => 17 MAY 2007

USERNAME => vignotovs

R. Valizadeh/V. Toan/Y.L./W.L./F.C.
DESIGN OVERSIGHT
SIGN OFF DATE 07/21/06

	BY	CHECKED
DESIGN	J. Duxbury	A. Sanjines
DETAILS	J. Duxbury	A. Sanjines
QUANTITIES	N. Vo	A. Sanjines

PREPARED FOR THE STATE OF CALIFORNIA
DEPARTMENT OF TRANSPORTATION

R. Manzanarez
PROJECT ENGINEER

BRIDGE NO. 34-0006L/R
KILOMETER POST 13.2/13.9

SAN FRANCISCO OAKLAND BAY BRIDGE
EAST SPAN SEISMIC SAFETY PROJECT
SELF-ANCHORED SUSPENSION BRIDGE
(SUPERSTRUCTURE & TOWER)

W2 CAP BEAM REINFORCEMENT DETAILS NO. 27

Rev. Date: 5-18-98

ORIGINAL SCALE IN MILLIMETERS FOR REDUCED PLANS 0 10 20 30 40 50 60 70 80 90 100

CU 04
EA 0120F1

DISREGARD PRINTS BEARING EARLIER REVISION DATES

REVISION DATES (PRELIMINARY STAGE ONLY) 07/21/06

SHEET 080S3 OF

FILE => L:\BB\04-012001\SAS\Contract Plans and CCO\CCO\CCO#23\DGN\aecap26r-s.dgn

DIST.	COUNTY	ROUTE	KILOMETER POST TOTAL PROJECT	SHEET NO.	TOTAL SHEETS
04	SF	80	13.2/13.9	497S4	1204

REGISTERED ENGINEER - CIVIL

07-21-06
PLANS APPROVAL DATE

The State of California or its officers or agents shall not be responsible for the accuracy or completeness of electronic copies of this plan sheet.

REGISTERED PROFESSIONAL ENGINEER James P. Duxbury No. C 64677 Exp. 06/30/07 CIVIL STATE OF CALIFORNIA

T.Y. LIN / MOFFATT & NICHOL
825 BATTERY STREET
SAN FRANCISCO, CA 94111

To get to the web site, go to: http://www.dot.ca.gov

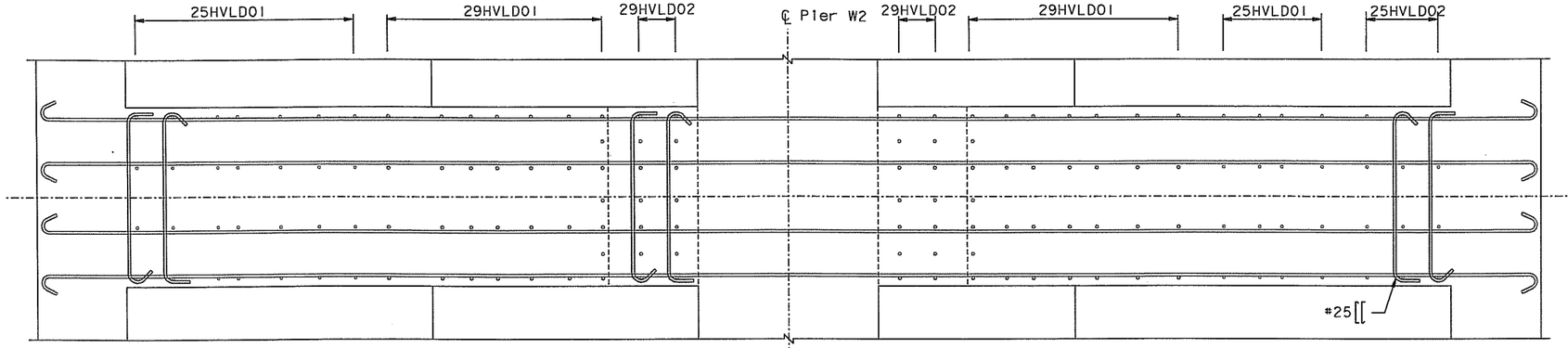

LONGITUDINAL DIAPHRAGM REINFORCEMENT PLAN
1:30

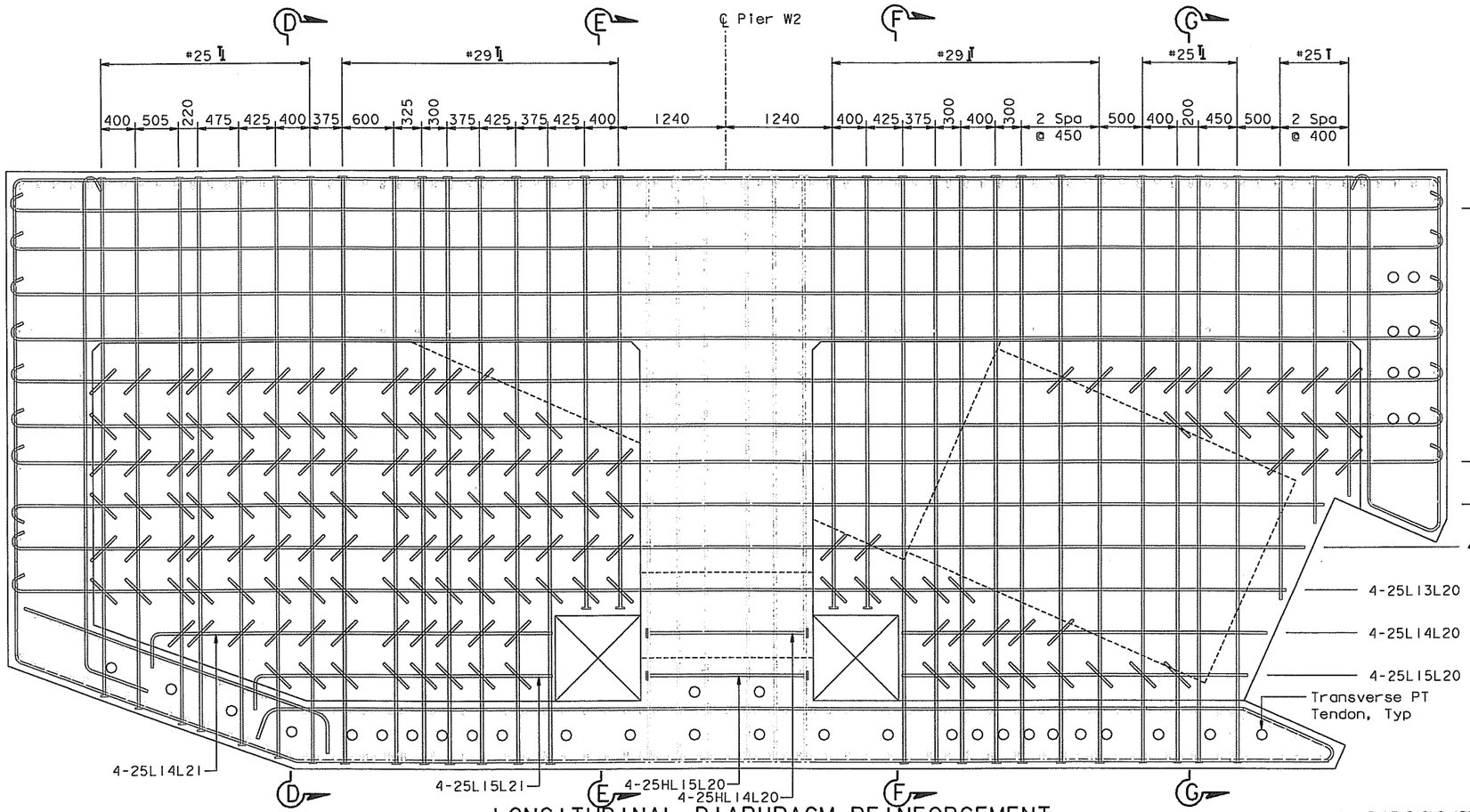

LONGITUDINAL DIAPHRAGM REINFORCEMENT
1:30

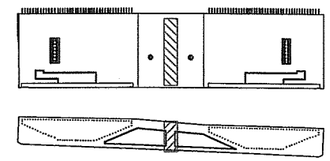

LOCATION KEY
NTS

NOTES:

1. For Section D-D thru G-G, see "W2 Cap Beam Reinforcement Details No.29" sheet.

MARK	DATE	REVISIONS	BY	CH'D	CCO#
0	07/21/06	W2 CAP BEAM ISD	JD	AS	23

CONTRACT CHANGE ORDER NO. 23
SHEET 52 OF 102

100 % PS&E

TIME PLOTTED => 10:12:39
DATE PLOTTED => 10 MAY 2007
USERNAME => vignatovs

R. Valizadeh/V. Toan/Y.L./W.L./F.C.
DESIGN OVERSIGHT
SIGN OFF DATE 05/04/07

	BY	CHECKED
DESIGN	J. Duxbury	A. SanJines
DETAILS	J. Duxbury	A. SanJines
QUANTITIES	N. Vo	J. Duxbury

PREPARED FOR THE STATE OF CALIFORNIA
DEPARTMENT OF TRANSPORTATION

R. Manzanarez
PROJECT ENGINEER

BRIDGE NO. 34-0006L/R
KILOMETER POST 13.2/13.9

ALL DIMENSIONS ARE IN MILLIMETERS UNLESS OTHERWISE SHOWN

SAN FRANCISCO OAKLAND BAY BRIDGE
EAST SPAN SEISMIC SAFETY PROJECT
SELF-ANCHORED SUSPENSION BRIDGE
(SUPERSTRUCTURE & TOWER)

W2 CAP BEAM REINFORCEMENT DETAILS NO. 28

Rev. Date: 5-18-98

ORIGINAL SCALE IN MILLIMETERS FOR REDUCED PLANS 0 10 20 30 40 50 60 70 80 90 100

CU 04
EA 0120F1

DISREGARD PRINTS BEARING EARLIER REVISION DATES

REVISION DATES (PRELIMINARY STAGE ONLY)										SHEET	OF
07/21/06										080S4R1	

FILE => I:\bb\04-0120I\sas\contract plans and cco\cco\cco#23\ascap27r-s.dgn

NOTES:

1. Top mat reinforcement not shown for clarity. See "W2 Cap Beam Reinforcement Details No. 2 to No. 8" sheets.
2. Bottom mat reinforcement not shown for clarity. See "W2 Cap Beam Reinforcement Details No. 9 to No. 18" sheets.
3. Jacking Saddle reinforcement not shown for clarity. See "W2 Cap Beam Reinforcement Details No. 30 to No. 33" sheets.
4. Horizontal and vertical stirrup reinforcement not shown for clarity. See "W2 Cap Beam Reinforcement Details No. 40 to No. 43" sheets.

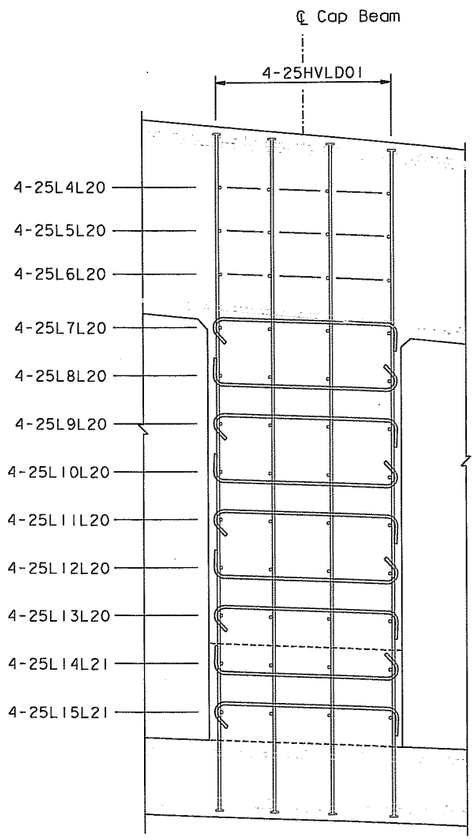

SECTION D-D

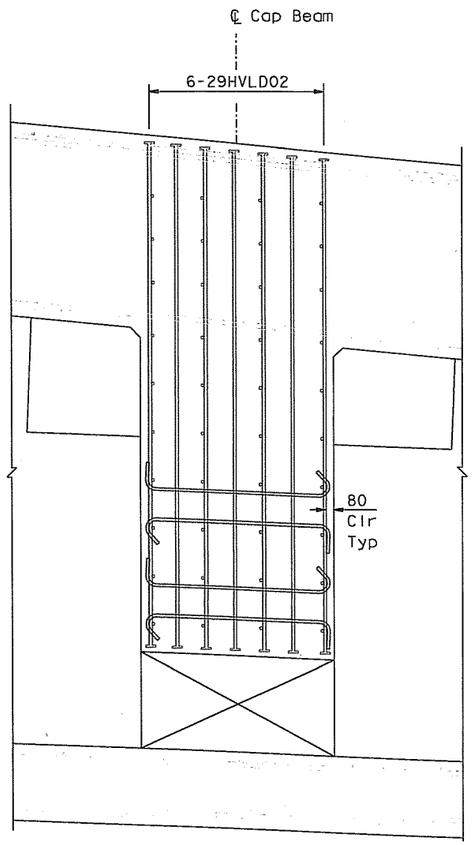

SECTION E-E

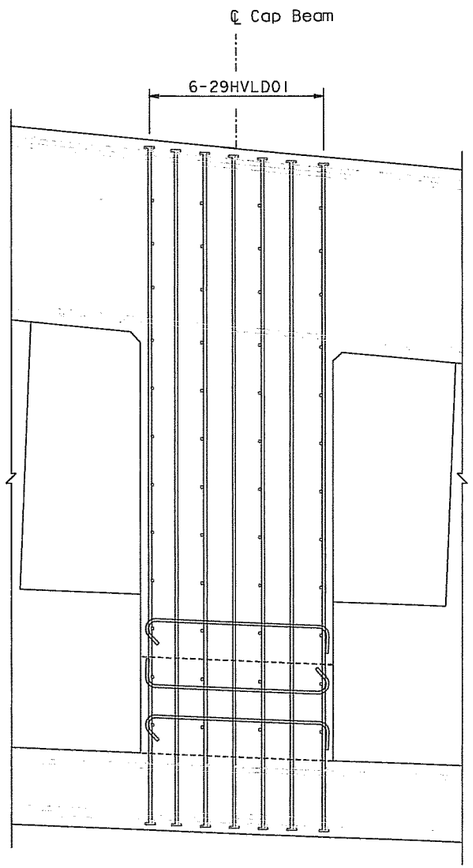

SECTION F-F

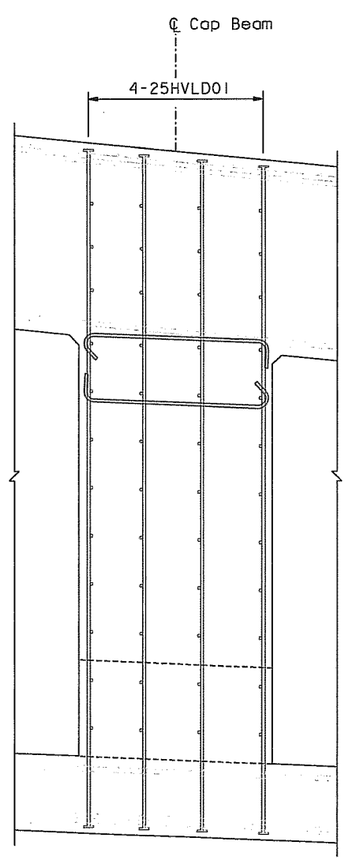

SECTION G-G

LONGITUDINAL DIAPHRAGM REINFORCEMENT

1:30

ALL DIMENSIONS ARE IN MILLIMETERS UNLESS OTHERWISE SHOWN

DIST.	COUNTY	ROUTE	KILOMETER POST TOTAL PROJECT	SHEET NO.	TOTAL SHEETS
04	SF	80	13.2/13.9	497S5	1204

Caltrans Metric

REGISTERED ENGINEER - CIVIL

07-21-06
PLANS APPROVAL DATE

REGISTERED PROFESSIONAL ENGINEER — James P. Duxbury — No. C 64677 — Exp. 06/30/07 — CIVIL — STATE OF CALIFORNIA

The State of California or its officers or agents shall not be responsible for the accuracy or completeness of electronic copies of this plan sheet.

T.Y. LIN / MOFFATT & NICHOL
825 BATTERY STREET
SAN FRANCISCO, CA 94111

To get to the web site, go to: http://www.dot.ca.gov

MARK	DATE	REVISIONS DESCRIPTIONS	BY	CH'D	CCO#
0	07/21/06	W2 CAP BEAM ISD	JD	AS	23

CONTRACT CHANGE ORDER NO. 23
SHEET 53 OF 102

100 % PS&E

SAN FRANCISCO OAKLAND BAY BRIDGE
EAST SPAN SEISMIC SAFETY PROJECT
SELF-ANCHORED SUSPENSION BRIDGE
(SUPERSTRUCTURE & TOWER)

W2 CAP BEAM REINFORCEMENT DETAILS NO. 29

R. Vallizadeh/V. Toan/Y. L./W. L./F. C.
DESIGN OVERSIGHT
SIGN OFF DATE 07/21/06

	BY	CHECKED
DESIGN	J. Duxbury	A. Sunjlines
DETAILS	J. Duxbury	A. Sunjlines
QUANTITIES	N. Vo	J. Duxbury

PREPARED FOR THE STATE OF CALIFORNIA
DEPARTMENT OF TRANSPORTATION

R. Manzanarez
PROJECT ENGINEER

BRIDGE NO. 34-0006L/R
KILOMETER POST 13.2/13.9

CU 04
EA 0120F1

DISREGARD PRINTS BEARING EARLIER REVISION DATES →
REVISION DATES (PRELIMINARY STAGE ONLY): 07/21/06
SHEET 080S5 OF

Rev. Date: 5-18-98

ORIGINAL SCALE IN MILLIMETERS FOR REDUCED PLANS 0 10 20 30 40 50 60 70 80 90 100

FILE => I:\bb\04-0120F1\sas\contract plans and cco\cco\cco#23\aecap28r-s.dgn

USERNAME => vlignatovs DATE PLOTTED => 10 MAY 2007 TIME PLOTTED => 10:13:24

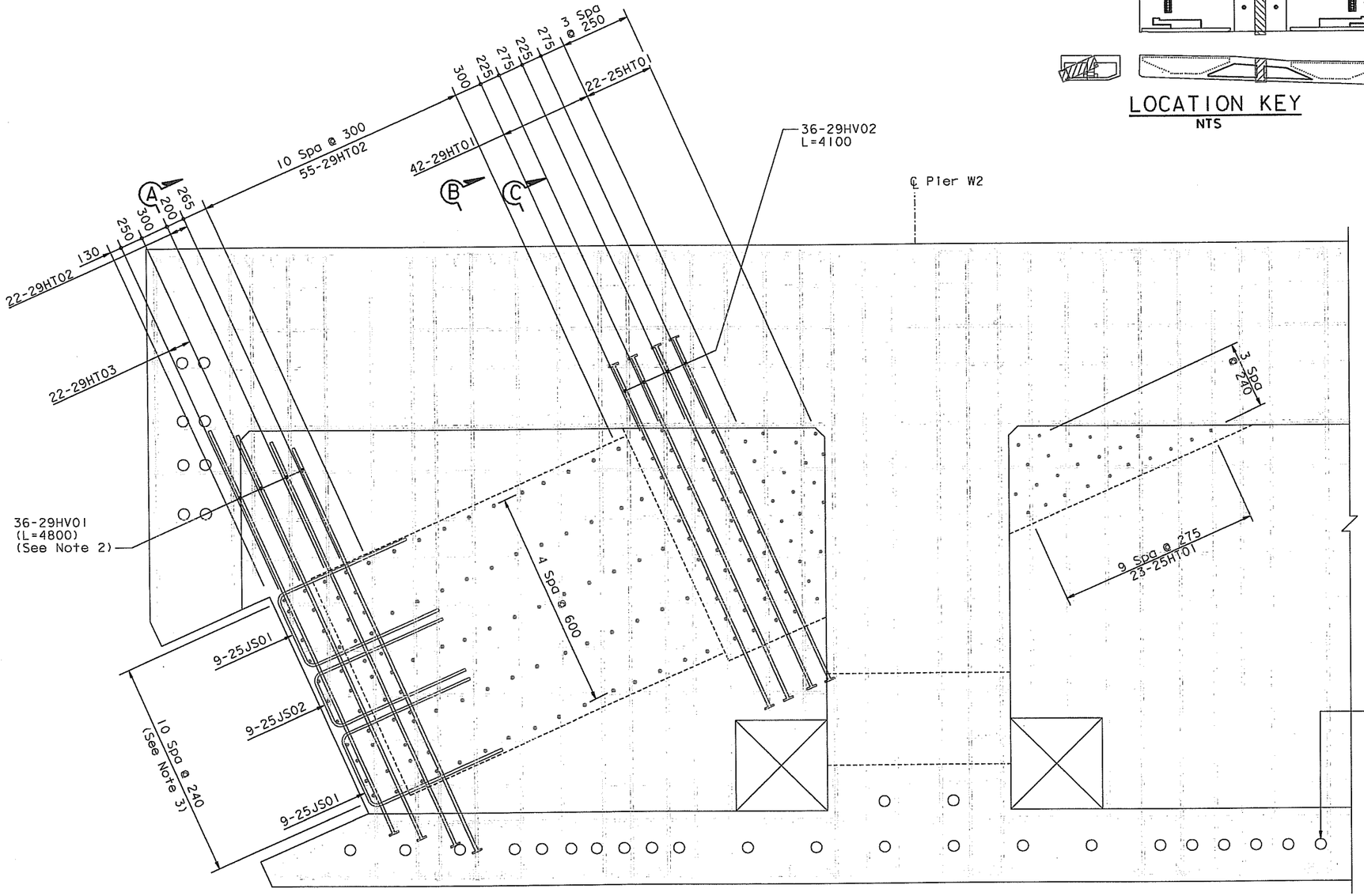

A B C

JACKING SADDLE REINFORCEMENT
(Jacking Frame At Longitudinal Diaphragm)
1:25

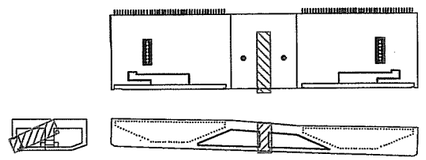

LOCATION KEY
NTS

NOTES:

1. For Section A-A thru C-C, see "W2 Cap Beam Reinforcement Details No.32" sheet.
2. Extend headed bar beyond Bottom Mat Layer B1.
3. Space as required to clear diaphragm reinforcement.
4. For Longitudinal diaphragm reinforcement, see "W2 Cap Beam Reinforcement Details No.28" sheet.
5. Jacking Saddle reinforcement placed normal to axis of jacking frame.

MARK	DATE	DESCRIPTIONS	BY	CH'D	CCO#
		REVISIONS			
0	07/21/06	W2 CAP BEAM ISD	JD	AS	23

CONTRACT CHANGE ORDER NO. 23
SHEET 54 OF 102

ALL DIMENSIONS ARE IN MILLIMETERS UNLESS OTHERWISE SHOWN

DIST.	COUNTY	ROUTE	KILOMETER POST TOTAL PROJECT	SHEET NO.	TOTAL SHEETS
04	SF	80	13.2/13.9	497S6	1204

REGISTERED ENGINEER - CIVIL
James P. Duxbury
No. C 64677
Exp. 06/30/07
CIVIL
STATE OF CALIFORNIA
07-21-06
PLANS APPROVAL DATE

The State of California or its officers or agents shall not be responsible for the accuracy or completeness of electronic copies of this plan sheet.

T.Y. LIN / MOFFATT & NICHOL
825 BATTERY STREET
SAN FRANCISCO, CA 94111

To get to the web site, go to: http://www.dot.ca.gov

DESIGN	BY J. Duxbury	CHECKED A. Sanjines	
DETAILS	BY J. Duxbury	CHECKED A. Sanjines	
QUANTITIES	BY N. Vo	CHECKED J. Duxbury	

R. Valizadeh/V. Toan/Y.L./W.L./F.C.
DESIGN OVERSIGHT
SIGN OFF DATE 07/21/06

PREPARED FOR THE STATE OF CALIFORNIA
DEPARTMENT OF TRANSPORTATION

R. Manzanarez
PROJECT ENGINEER

BRIDGE NO. 34-0006L/R
KILOMETER POST 13.2/13.9

SAN FRANCISCO OAKLAND BAY BRIDGE
EAST SPAN SEISMIC SAFETY PROJECT
SELF-ANCHORED SUSPENSION BRIDGE
(SUPERSTRUCTURE & TOWER)

W2 CAP BEAM REINFORCEMENT DETAILS NO. 30

Rev. Date: 5-18-98

ORIGINAL SCALE IN MILLIMETERS FOR REDUCED PLANS 0 10 20 30 40 50 60 70 80 90 100

CU 04
EA 0120F1

DISREGARD PRINTS BEARING EARLIER REVISION DATES

REVISION DATES (PRELIMINARY STAGE ONLY): 07/21/06

SHEET 080S6 OF

FILE => I:\bb\04-012001\sas\contract plans and cco\cco\cco#23\decap29r-s.dgn

USERNAME => vlignatovs DATE PLOTTED => 10 MAY 2007 TIME PLOTTED => 10:14:06

100 % PS&E

NOTES:

1. For Section A-A thru C-C, see "W2 Cap Beam Reinforcement Details No.32" sheet.
2. For reinforcement spacing, see "W2 Cap Beam Reinforcement Details No.30" sheet.

DIST.	COUNTY	ROUTE	KILOMETER POST TOTAL PROJECT	SHEET NO.	TOTAL SHEETS
04	SF	80	13.2/13.9	497S7	1204

Caltrans Metric

REGISTERED ENGINEER - CIVIL

07-21-06

PLANS APPROVAL DATE

REGISTERED PROFESSIONAL ENGINEER James P.Duxbury No. C 64677 Exp. 06/30/07 CIVIL STATE OF CALIFORNIA

The State of California or its officers or agents shall not be responsible for the accuracy or completeness of electronic copies of this plan sheet.

T.Y. LIN / MOFFATT & NICHOL
825 BATTERY STREET
SAN FRANCISCO, CA 94111

To get to the web site, go to: http://www.dot.ca.gov

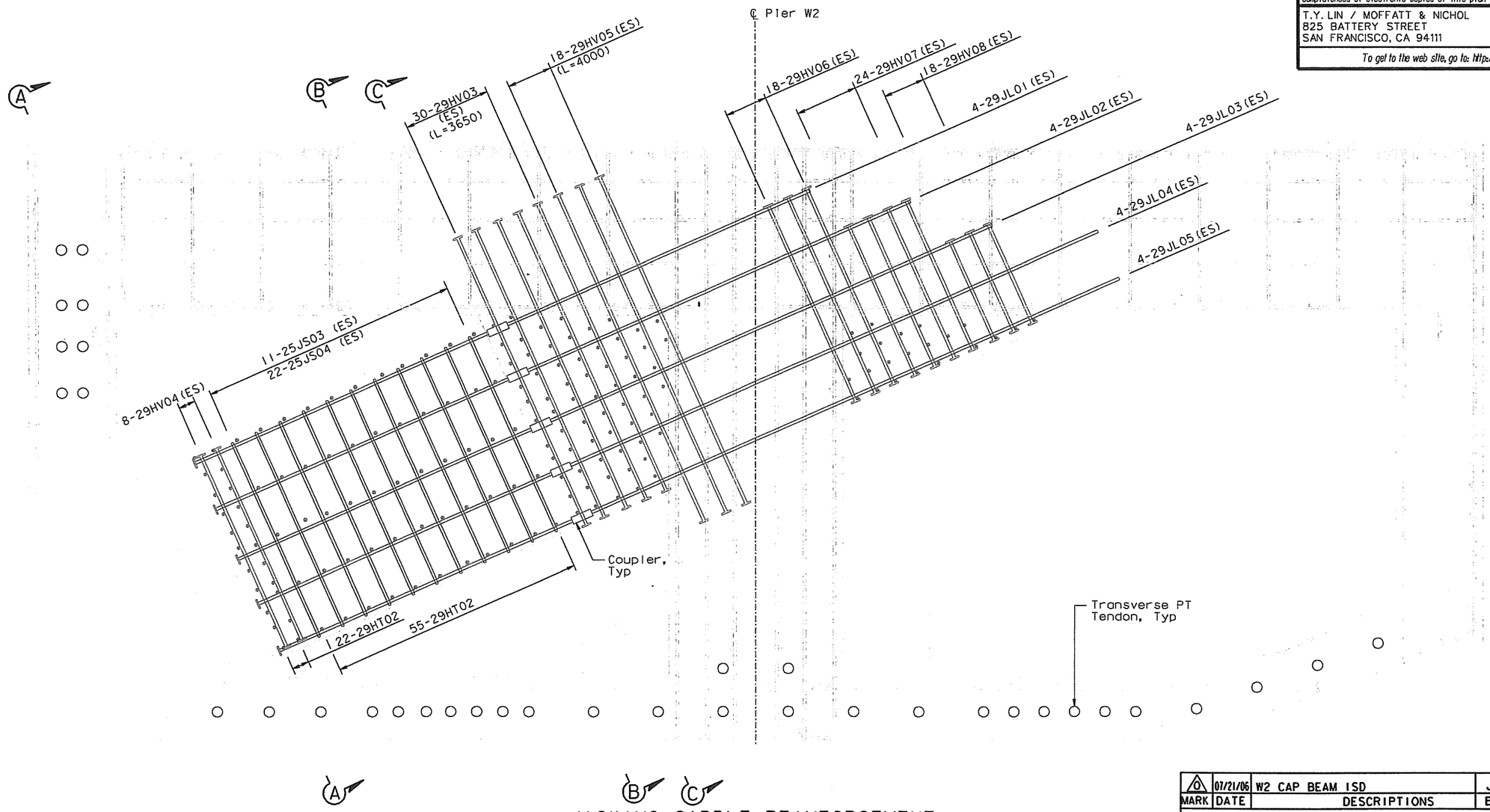

JACKING SADDLE REINFORCEMENT
(Jacking Frame At Support Block)
1:25

MARK	DATE	DESCRIPTIONS	BY	CH'D	CCO#
0	07/21/06	W2 CAP BEAM ISD	JD	AS	23

REVISIONS

CONTRACT CHANGE ORDER NO. 23
SHEET 55 OF 102

ALL DIMENSIONS ARE IN MILLIMETERS UNLESS OTHERWISE SHOWN

SAN FRANCISCO OAKLAND BAY BRIDGE
EAST SPAN SEISMIC SAFETY PROJECT
SELF-ANCHORED SUSPENSION BRIDGE
(SUPERSTRUCTURE & TOWER)

W2 CAP BEAM REINFORCEMENT DETAILS NO. 31

R. Valizadeh/V. Toan/Y.L./W.L./F.C.
DESIGN OVERSIGHT
Reza Valizadeh / Vong Toan / Y. Lin
SIGN OFF DATE 07/21/06

	BY	CHECKED
DESIGN	J. Duxbury	A. Sanjines
DETAILS	J. Duxbury	A. Sanjines
QUANTITIES	N. Vo	J. Duxbury

PREPARED FOR THE STATE OF CALIFORNIA DEPARTMENT OF TRANSPORTATION

R. Manzanarez
PROJECT ENGINEER

BRIDGE NO. 34-0006L/R
KILOMETER POST 13.2/13.9

Rev. Date: 5-18-98

ORIGINAL SCALE IN MILLIMETERS FOR REDUCED PLANS 0 10 20 30 40 50 60 70 80 90 100

CU 04
EA 0120F1

DISREGARD PRINTS BEARING EARLIER REVISION DATES

REVISION DATES (PRELIMINARY STAGE ONLY) 07/21/06

SHEET 080S7 OF

FILE => 1:\bb\04-012001\sas\contract plans and cco\cco\cco=23\aecap30r-s.dgn

USERNAME => vignatovs DATE PLOTTED => 10 MAY 2007 TIME PLOTTED => 10:14:40

100 % PS&E

MARK	DATE	DESCRIPTIONS	JD / BY	AS / CH'D	23 / CCO#
0	07/21/06	W2 CAP BEAM ISD			

REVISIONS

CONTRACT CHANGE ORDER NO. 23
SHEET 56 OF 102

NOTES:

1. Top mat reinforcement not shown for clarity. See "W2 Cap Beam Reinforcement Details No.2 to No.8" sheets.
2. Bottom mat reinforcement not shown for clarity. See "W2 Cap Beam Reinforcement Details No.9 to No.18" sheets.
3. Diaphragm reinforcement not shown for clarity. See "W2 Cap Beam Reinforcement Details No.26 to No.29" sheets.
4. Horizontal and vertical stirrup reinforcement not shown for clarity. See "W2 Cap Beam Reinforcement Details No.40 to No.43" sheets.

Caltrans Metric

DIST.	COUNTY	ROUTE	KILOMETER POST TOTAL PROJECT	SHEET NO.	TOTAL SHEETS
04	SF	80	13.2/13.9	49758	1204

REGISTERED ENGINEER - CIVIL

James P. Duxbury
No. C 64677
Exp. 06/30/07
CIVIL
REGISTERED PROFESSIONAL ENGINEER
STATE OF CALIFORNIA

07-21-06
PLANS APPROVAL DATE

The State of California or its officers or agents shall not be responsible for the accuracy or completeness of electronic copies of this plan sheet.

T.Y. LIN / MOFFATT & NICHOL
825 BATTERY STREET
SAN FRANCISCO, CA 94111

To get to the web site, go to: http://www.dot.ca.gov

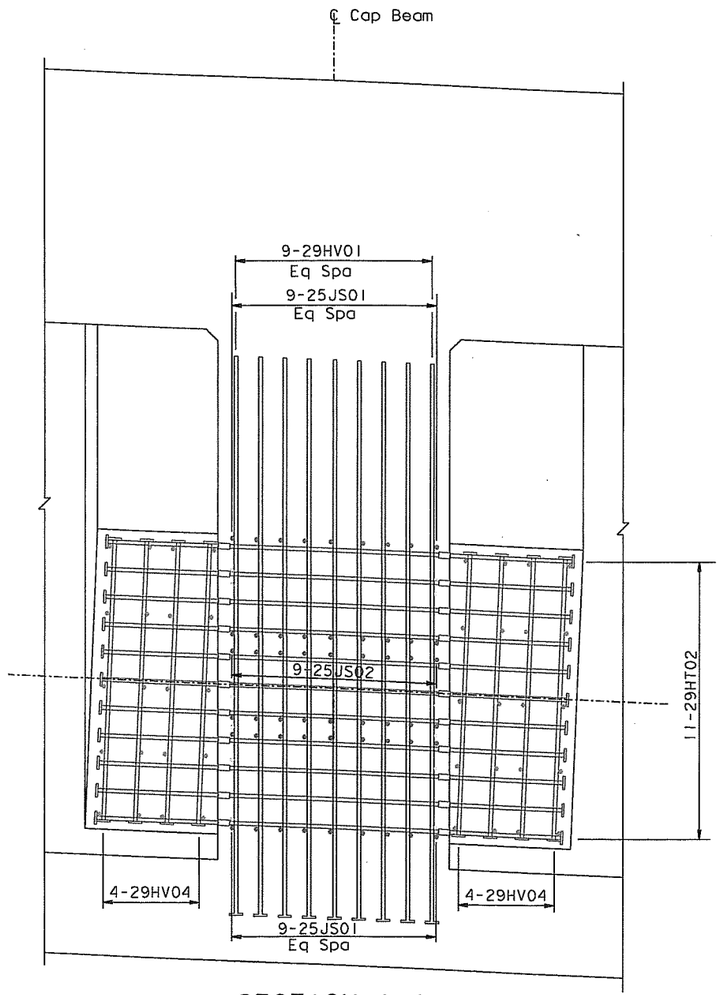

SECTION A-A

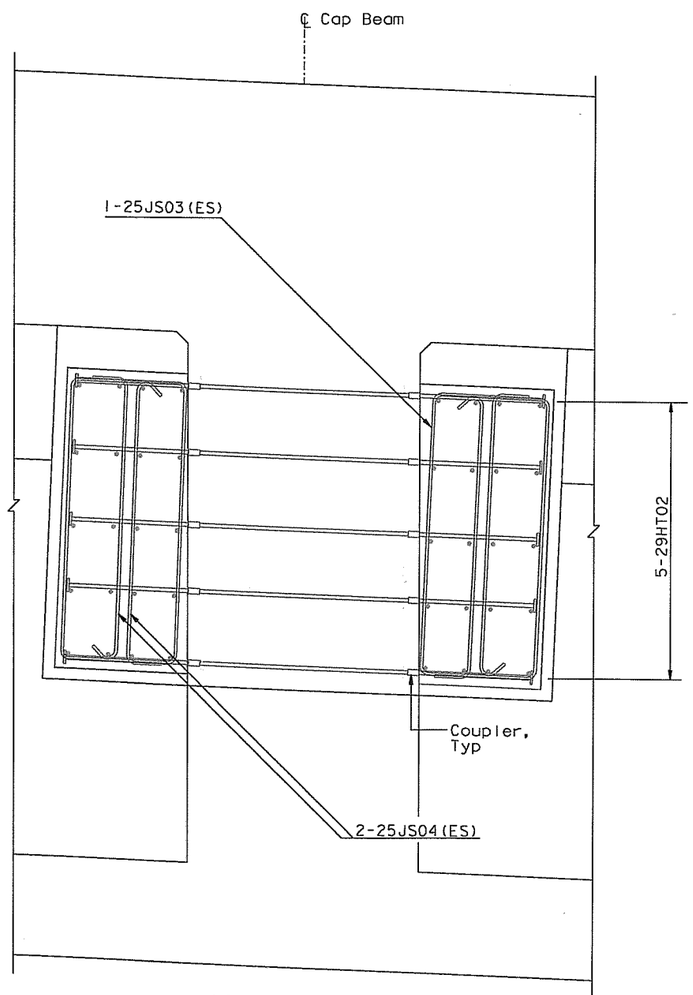

SECTION B-B

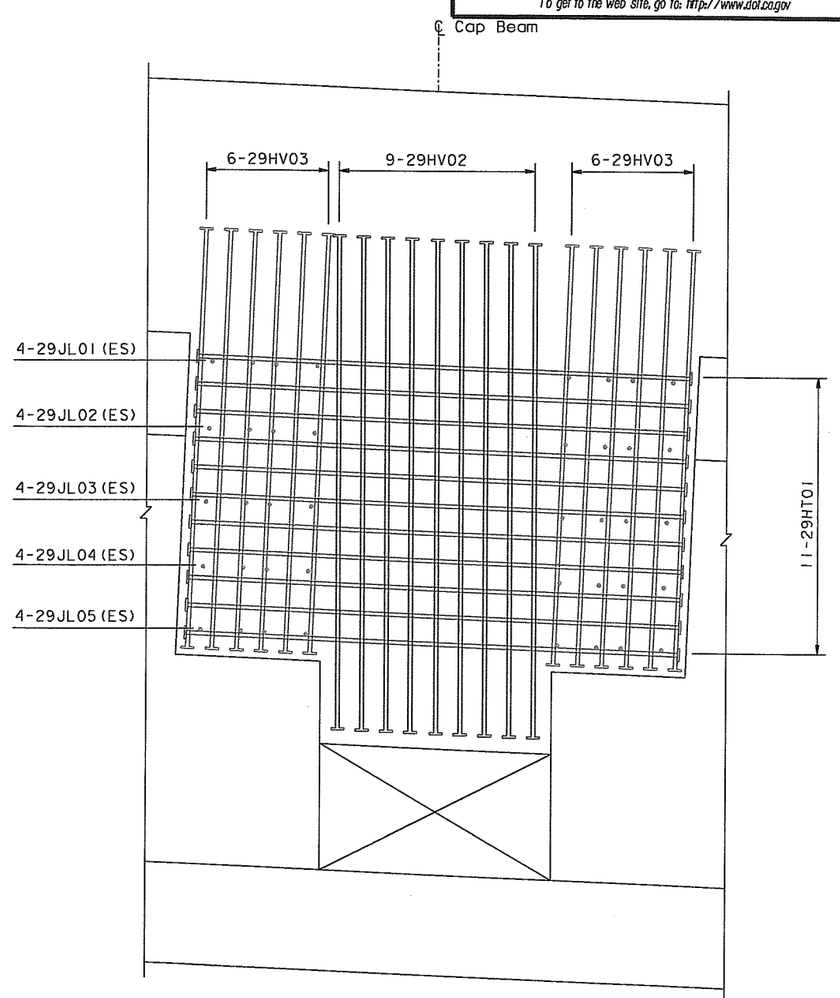

SECTION C-C

JACKING SADDLE REINFORCEMENT
1:30

ALL DIMENSIONS ARE IN MILLIMETERS UNLESS OTHERWISE SHOWN

R. Vallzadeh/V. Toan/Y.L./W.L./F.C.
DESIGN OVERSIGHT
SIGN OFF DATE 07/21/06

	BY	CHECKED
DESIGN	J. Duxbury	A. Sanjines
DETAILS	J. Duxbury	A. Sanjines
QUANTITIES	N. Vo	J. Duxbury

PREPARED FOR THE STATE OF CALIFORNIA
DEPARTMENT OF TRANSPORTATION

R. Manzanarez
PROJECT ENGINEER

BRIDGE NO. 34-0006L/R
KILOMETER POST 13.2/13.9

SAN FRANCISCO OAKLAND BAY BRIDGE
EAST SPAN SEISMIC SAFETY PROJECT
SELF-ANCHORED SUSPENSION BRIDGE
(SUPERSTRUCTURE & TOWER)

W2 CAP BEAM REINFORCEMENT DETAILS NO. 32

Rev. Date: 5-18-98

ORIGINAL SCALE IN MILLIMETERS FOR REDUCED PLANS 0 10 20 30 40 50 60 70 80 90 100

CU 04
EA 0120F1

DISREGARD PRINTS BEARING EARLIER REVISION DATES →

REVISION DATES (PRELIMINARY STAGE ONLY)									SHEET	OF
07/21/06									080S8	

FILE => I:\bb\04-012001\sas\contract plans and cco\cco\cco#23\aecap31r-s.dgn

100% PS&E

USERNAME => vignatovs DATE PLOTTED => 10 MAY 2007 TIME PLOTTED => 10:15:18

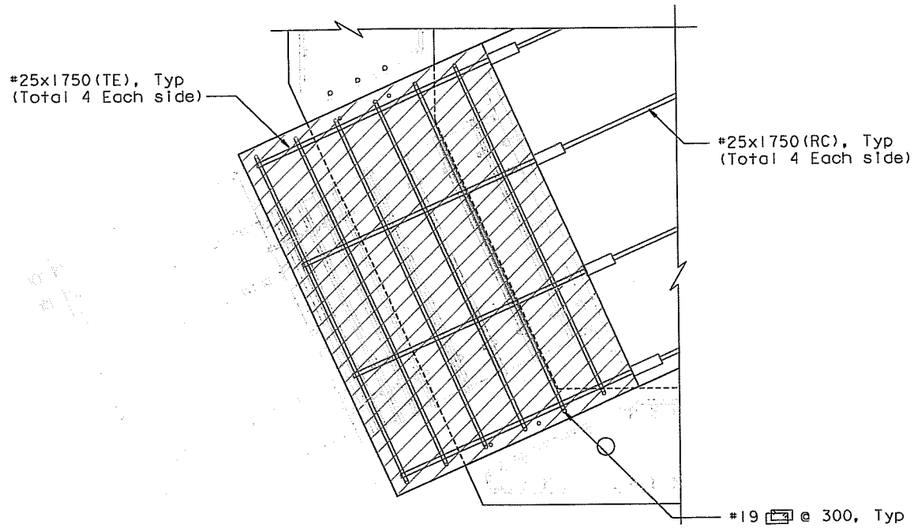

SECTION D-D

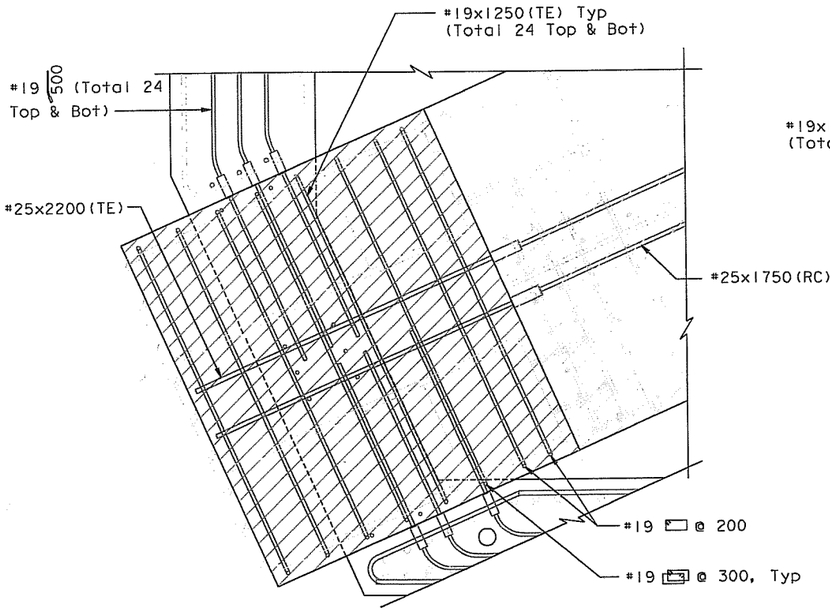

SECTION E-E

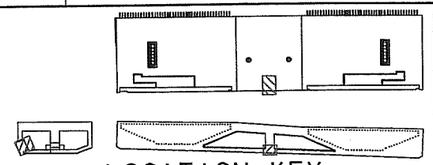

LOCATION KEY
NTS

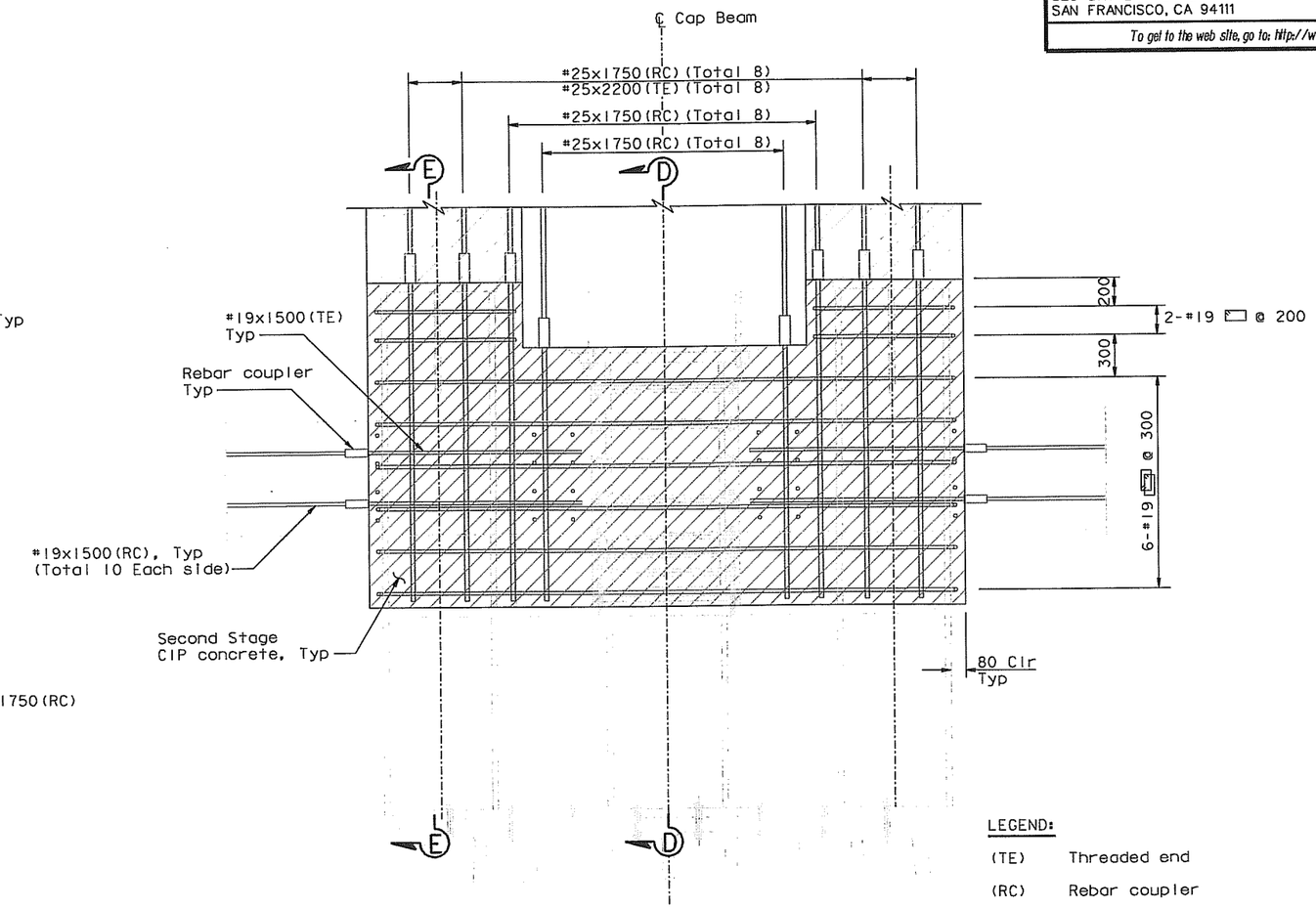

JACKING FRAME PLAN

LEGEND:

(TE) Threaded end

(RC) Rebar coupler

SECOND STAGE CIP CONCRETE REINFORCEMENT

(At Jacking Frame)
1:20

ALL DIMENSIONS ARE IN MILLIMETERS UNLESS OTHERWISE SHOWN

DIST.	COUNTY	ROUTE	KILOMETER POST TOTAL PROJECT	SHEET NO.	TOTAL SHEETS
04	SF	80	13.2/13.9	497S9	1204

REGISTERED ENGINEER - CIVIL
James P. Duxbury
No. C 64677
Exp. 06/30/07
CIVIL
STATE OF CALIFORNIA
07-21-06
PLANS APPROVAL DATE

The State of California or its officers or agents shall not be responsible for the accuracy or completeness of electronic copies of this plan sheet.

T.Y. LIN / MOFFATT & NICHOL
825 BATTERY STREET
SAN FRANCISCO, CA 94111

To get to the web site, go to: http://www.dot.ca.gov

MARK	DATE	REVISIONS DESCRIPTIONS	BY	CH'D	CCO#
0	07/21/06	W2 CAP BEAM ISD	JD	AS	23

CONTRACT CHANGE ORDER NO. 23
SHEET 57 OF 102

100 % PS&E

TIME PLOTTED => 10:16:15
DATE PLOTTED => 10 MAY 2007
USERNAME => vlgnatov\$

SAN FRANCISCO OAKLAND BAY BRIDGE
EAST SPAN SEISMIC SAFETY PROJECT
SELF-ANCHORED SUSPENSION BRIDGE
(SUPERSTRUCTURE & TOWER)

W2 CAP BEAM REINFORCEMENT DETAILS NO. 33

R. Valizadeh/V. Toan/Y.L./W.L./F.C.
DESIGN OVERSIGHT
SIGN OFF DATE 07/21/06

	BY	CHECKED
DESIGN	J. Duxbury	A. Sanjines
DETAILS	J. Duxbury	A. Sanjines
QUANTITIES	N. Vo	J. Duxbury

PREPARED FOR THE
STATE OF CALIFORNIA
DEPARTMENT OF TRANSPORTATION

R. Manzanarez
PROJECT ENGINEER

BRIDGE NO. 34-0006L/R
KILOMETER POST 13.2/13.9

CU 04
EA 0120F1

DISREGARD PRINTS BEARING EARLIER REVISION DATES →
REVISION DATES (PRELIMINARY STAGE ONLY): 07/21/06
SHEET 080S9 OF

Rev. Date: 5-18-98

ORIGINAL SCALE IN MILLIMETERS FOR REDUCED PLANS 0 10 20 30 40 50 60 70 80 90 100

FILE => I:\bb\04-0120F1\sas\contract plans and cco\cco\cco#23\aecap33r-c.dgn

NOTES:

1. Top mat reinforcement not shown for clarity. See "W2 Cap Beam Reinforcement Details No. 2 to No. 8" sheets.
2. Bottom mat reinforcement not shown for clarity. See "W2 Cap Beam Reinforcement Details No. 9 to No. 18" sheets.
3. West Face reinforcement not shown for clarity. See "W2 Cap Beam Reinforcement Details No. 19 to No. 25" sheets.
4. Blockout reinforcement not shown for clarity. See "W2 Cap Beam Blockout Details" sheets.

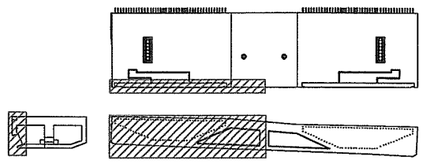

LOCATION KEY
NTS

Caltrans Metric

DIST.	COUNTY	ROUTE	KILOMETER POST TOTAL PROJECT	SHEET NO.	TOTAL SHEETS
04	SF	80	13.2/13.9	497S10	1204

REGISTERED ENGINEER - CIVIL

07-21-06
PLANS APPROVAL DATE

REGISTERED PROFESSIONAL ENGINEER * James P. Duxbury * No. C 64677 Exp. 06/30/07 CIVIL STATE OF CALIFORNIA

The State of California or its officers or agents shall not be responsible for the accuracy or completeness of electronic copies of this plan sheet.

T.Y. LIN / MOFFATT & NICHOL
825 BATTERY STREET
SAN FRANCISCO, CA 94111

To get to the web site, go to: http://www.dot.ca.gov

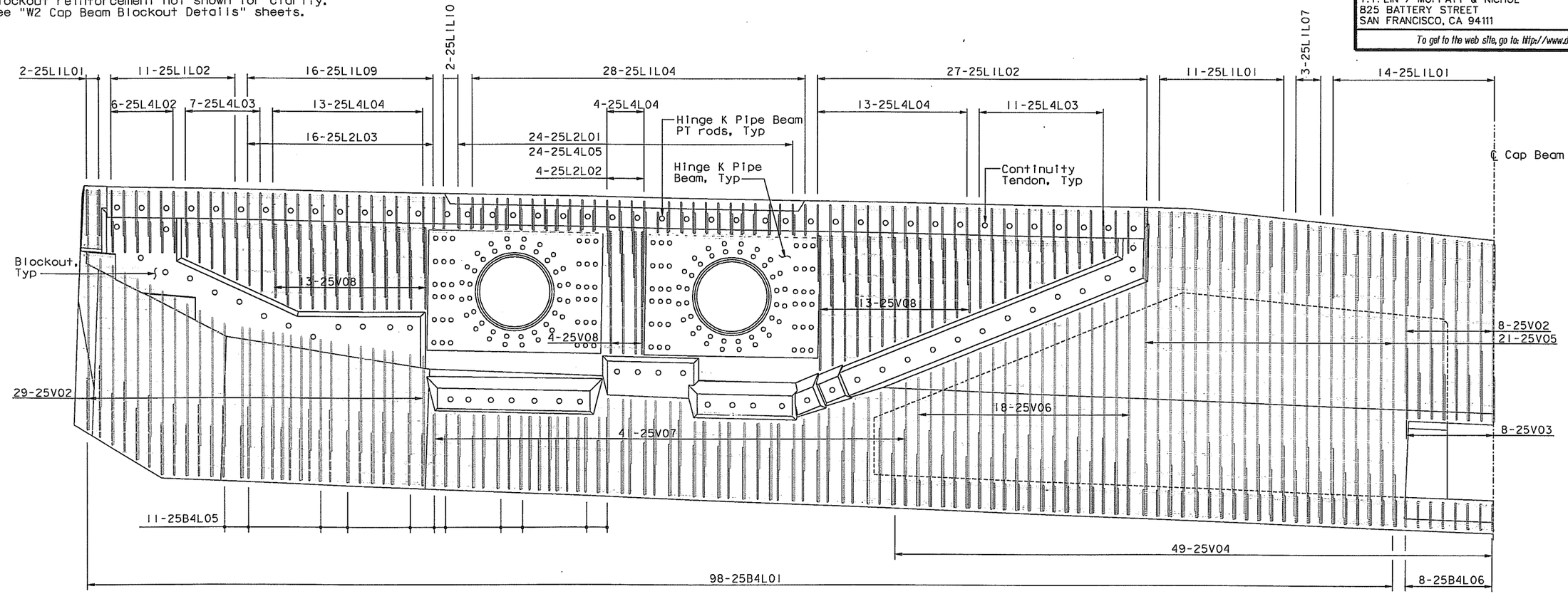

WEST FACE SKIN REINFORCEMENT (NORTH) (EXTERIOR)

(Looking East) (South Side Similar)
1:50

MARK	DATE	REVISIONS DESCRIPTIONS	BY	CH'D	CCO#
0	07/21/06	W2 CAP BEAM ISD	JD	AS	23

CONTRACT CHANGE ORDER NO. 23
SHEET 58 OF 102

100 % PS&E

ALL DIMENSIONS ARE IN MILLIMETERS UNLESS OTHERWISE SHOWN

R. Valizadeh/V. Toan/Y.L./W.L./F.C.
DESIGN OVERSIGHT
SIGN OFF DATE 07/21/06

	BY	CHECKED
DESIGN	J. Duxbury	A. Sanjines
DETAILS	J. Duxbury	A. Sanjines
QUANTITIES	N. Vo	J. Duxbury

PREPARED FOR THE STATE OF CALIFORNIA DEPARTMENT OF TRANSPORTATION

R. Manzanarez
PROJECT ENGINEER

BRIDGE NO. 34-0006L/R
KILOMETER POST 13.2/13.9

SAN FRANCISCO OAKLAND BAY BRIDGE
EAST SPAN SEISMIC SAFETY PROJECT
SELF-ANCHORED SUSPENSION BRIDGE (SUPERSTRUCTURE & TOWER)

W2 CAP BEAM REINFORCEMENT DETAILS NO. 34

Rev. Date: 5-18-98

ORIGINAL SCALE IN MILLIMETERS FOR REDUCED PLANS 0 10 20 30 40 50 60 70 80 90 100

CU 04
EA 0120F1

DISREGARD PRINTS BEARING EARLIER REVISION DATES

REVISION DATES (PRELIMINARY STAGE ONLY) 07/21/06

SHEET 080S10 OF

FILE => I:\bb\04-012001\sas\contract plans and cco\cco\cco#23\oecap32r-s.dgn

USERNAME => vignatovs DATE PLOTTED => 10 MAY 2007 TIME PLOTTED => 10:17:01

NOTES:

1. Top mat reinforcement not shown for clarity. See "W2 Cap Beam Reinforcement Details No. 2 to No. 8" sheets.
2. Bottom mat reinforcement not shown for clarity. See "W2 Cap Beam Reinforcement Details No. 9 to No. 18" sheets.
3. East Face reinforcement not shown for clarity. See "W2 Cap Beam Reinforcement Details No. 19 to No. 25" sheets.
4. Closure Joint reinforcement not shown for clarity. See "W2 Cap Beam Reinforcement Details No. 48 to No. 49" sheets.

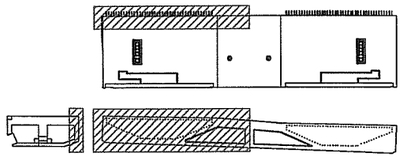

LOCATION KEY
NTS

Caltrans Metric

DIST.	COUNTY	ROUTE	KILOMETER POST TOTAL PROJECT	SHEET NO.	TOTAL SHEETS
04	SF	80	13.2/13.9	497511	1204

REGISTERED ENGINEER - CIVIL

07-21-06
PLANS APPROVAL DATE

REGISTERED PROFESSIONAL ENGINEER
James P. Duxbury
No. C 64677
Exp. 06/30/07
CIVIL
STATE OF CALIFORNIA

The State of California or its officers or agents shall not be responsible for the accuracy or completeness of electronic copies of this plan sheet.

T.Y. LIN / MOFFATT & NICHOL
825 BATTERY STREET
SAN FRANCISCO, CA 94111

To get to the web site, go to: http://www.dot.ca.gov

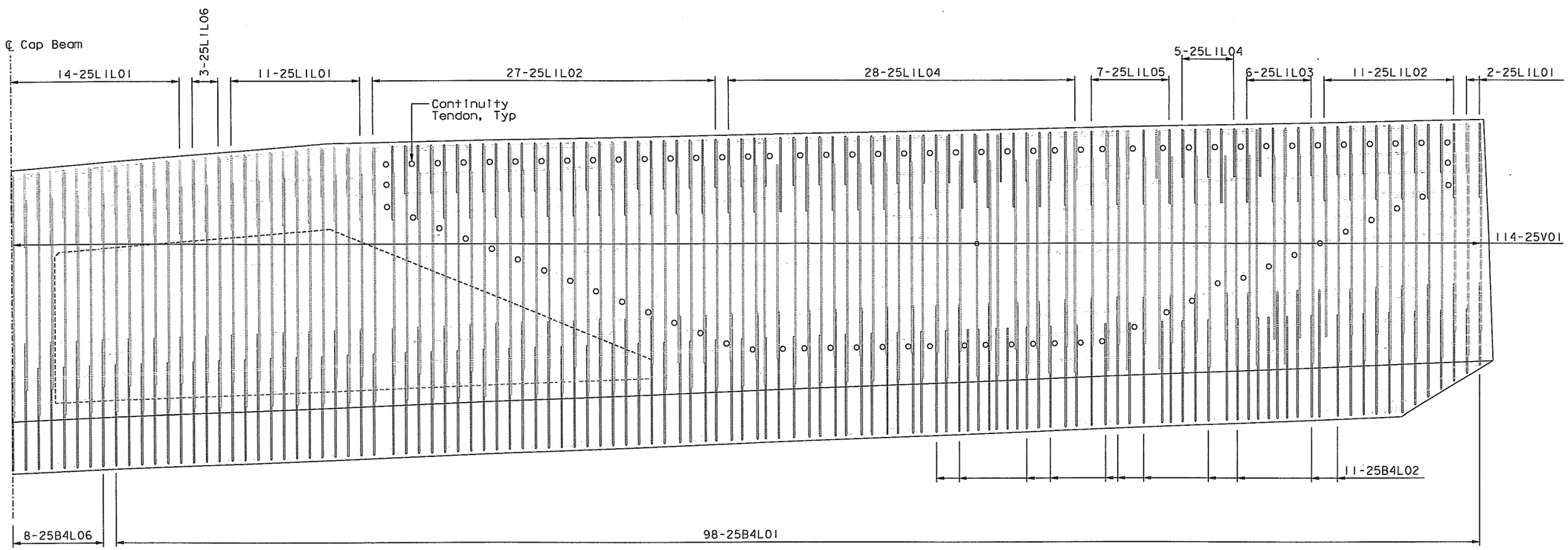

EAST FACE SKIN REINFORCEMENT (NORTH) (EXTERIOR)

(Looking West) (South Side Similar)
1:50

MARK	DATE	REVISIONS DESCRIPTIONS	BY	CH'D	CCO#
0	07/21/06	W2 CAP BEAM ISD	JD	AS	23

CONTRACT CHANGE ORDER NO. 23
SHEET 59 OF 102

100 % PS&E

ALL DIMENSIONS ARE IN MILLIMETERS UNLESS OTHERWISE SHOWN

SAN FRANCISCO OAKLAND BAY BRIDGE
EAST SPAN SEISMIC SAFETY PROJECT
SELF-ANCHORED SUSPENSION BRIDGE
(SUPERSTRUCTURE & TOWER)

W2 CAP BEAM REINFORCEMENT DETAILS NO. 35

R. Vallizadeh/V. Toan/Y.L./W.L./F.C.
DESIGN OVERSIGHT
SIGN OFF DATE 07/21/06

	BY	CHECKED
DESIGN	J. Duxbury	A. Sanjines
DETAILS	J. Duxbury	A. Sanjines
QUANTITIES	N. Vo	J. Duxbury

PREPARED FOR THE STATE OF CALIFORNIA
DEPARTMENT OF TRANSPORTATION

R. Manzanarez
PROJECT ENGINEER

BRIDGE NO. 34-0006L/R
KILOMETER POST 13.2/13.9

CU 04
EA 0120F1

Rev. Date: 5-18-98

ORIGINAL SCALE IN MILLIMETERS FOR REDUCED PLANS 0 10 20 30 40 50 60 70 80 90 100

DISREGARD PRINTS BEARING EARLIER REVISION DATES

REVISION DATES (PRELIMINARY STAGE ONLY): 07/21/06

SHEET 080511 OF

FILE => I:\bb\04-012001\sas\contract plans and cco\cco\cco#23\aecap33r-s.dgn

USERNAME => vlgnctovs DATE PLOTTED => 10 MAY 2007 TIME PLOTTED => 10:17:51

NOTES:

1. For Section A-A thru D-D, see "W2 Cap Beam Reinforcement Details No. 37" sheet.
2. For Section E-E thru J-J, see "W2 Cap Beam Reinforcement Details No. 38" sheet.
3. Blockout reinforcement not shown for clarity. See "W2 Cap Beam Blockout Details" sheets.

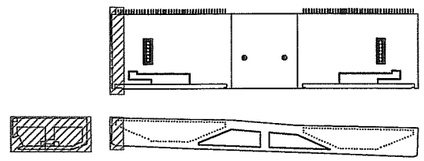

LOCATION KEY
NTS

DIST.	COUNTY	ROUTE	KILOMETER POST TOTAL PROJECT	SHEET NO.	TOTAL SHEETS
04	SF	80	13.2/13.9	497512	1204

REGISTERED ENGINEER - CIVIL
James P. Duxbury
07-21-06
PLANS APPROVAL DATE
The State of California or its officers or agents shall not be responsible for the accuracy or completeness of electronic copies of this plan sheet.

REGISTERED PROFESSIONAL ENGINEER
James P. Duxbury
No. C 64677
Exp. 06/30/07
CIVIL
STATE OF CALIFORNIA

T.Y. LIN / MOFFATT & NICHOL
825 BATTERY STREET
SAN FRANCISCO, CA 94111

To get to the web site, go to: http://www.dot.ca.gov

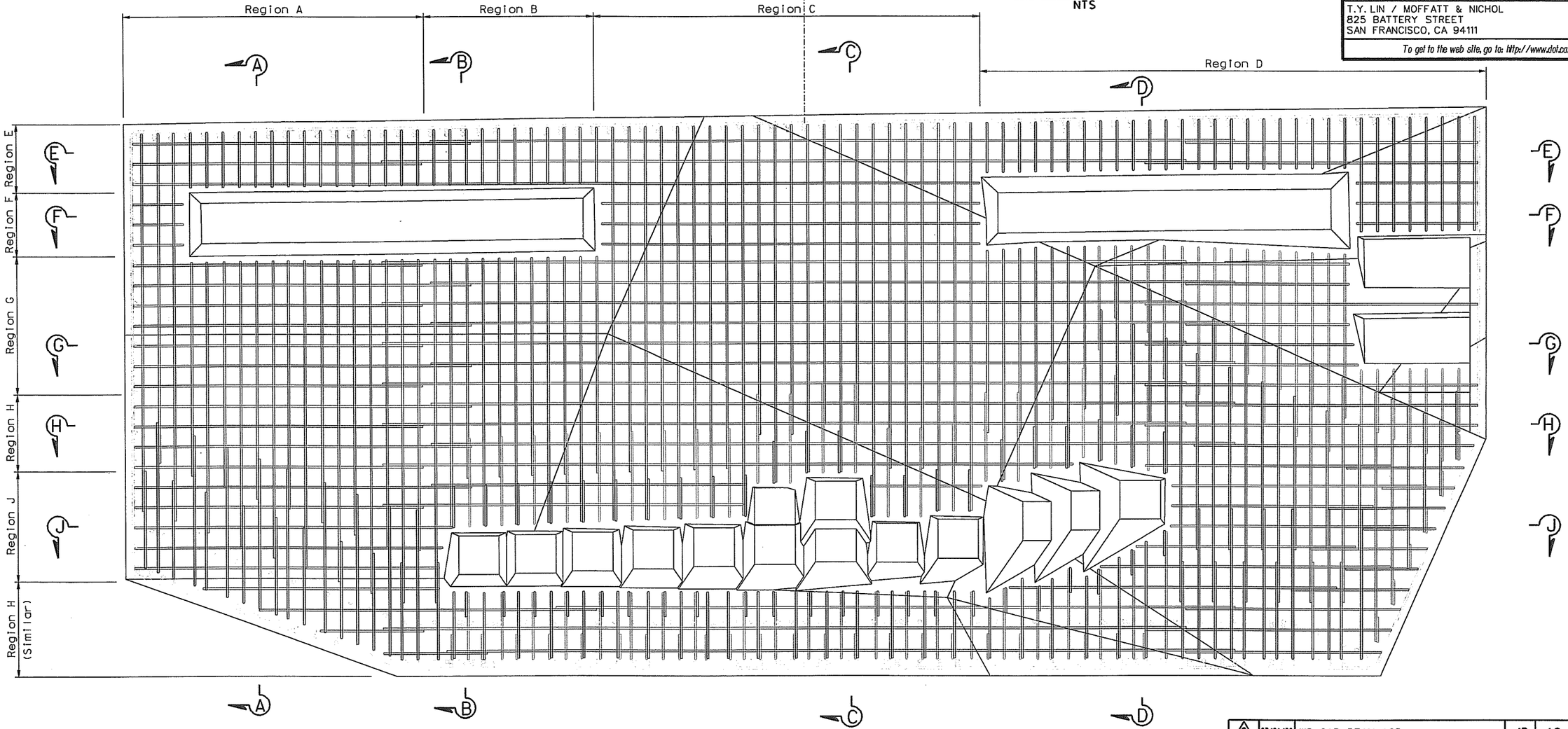

CAP END SKIN REINFORCEMENT (NORTH)
(South End Similar)
1:25

MARK	DATE	DESCRIPTIONS	BY	CH'D	CCO#
0	07/21/06	W2 CAP BEAM ISD	JD	AS	23

REVISIONS

CONTRACT CHANGE ORDER NO. 23
SHEET 60 OF 102

100 % PS&E

ALL DIMENSIONS ARE IN MILLIMETERS UNLESS OTHERWISE SHOWN

R. Vallzadeh/V. Toan/Y.L./W.L./F.C.
DESIGN OVERSIGHT
SIGN OFF DATE 07/21/06

	BY	CHECKED
DESIGN	J. Duxbury	A. Sanjines
DETAILS	J. Duxbury	A. Sanjines
QUANTITIES	N. Vo	J. Duxbury

PREPARED FOR THE STATE OF CALIFORNIA DEPARTMENT OF TRANSPORTATION

R. Manzanarez
PROJECT ENGINEER

BRIDGE NO. 34-0006L/R
KILOMETER POST 13.2/13.9

SAN FRANCISCO OAKLAND BAY BRIDGE
EAST SPAN SEISMIC SAFETY PROJECT
SELF-ANCHORED SUSPENSION BRIDGE
(SUPERSTRUCTURE & TOWER)

W2 CAP BEAM REINFORCEMENT DETAILS NO. 36

Rev. Date: 5-18-98

ORIGINAL SCALE IN MILLIMETERS FOR REDUCED PLANS 0 10 20 30 40 50 60 70 80 90 100

CU 04
EA 0120F1

DISREGARD PRINTS BEARING EARLIER REVISION DATES →

REVISION DATES (PRELIMINARY STAGE ONLY): 07/21/06

SHEET 080512 OF

FILE => I:\bb\04-012001\sos\contract plans and cco\cco\cco#23\decap34r-s.dgn

USERNAME => vignatovs DATE PLOTTED => 10 MAY 2007 TIME PLOTTED => 10:18:29

NOTES:

1. Top mat reinforcement not shown for clarity.
   See "W2 Cap Beam Reinforcement Details
   No.2 to No.8" sheets.
2. Bottom mat reinforcement not shown for clarity.
   See "W2 Cap Beam Reinforcement Details
   No.9 to No.18" sheets.
3. Blockout reinforcement not shown for clarity.
   See "W2 Cap Beam Blockout Details" sheets.

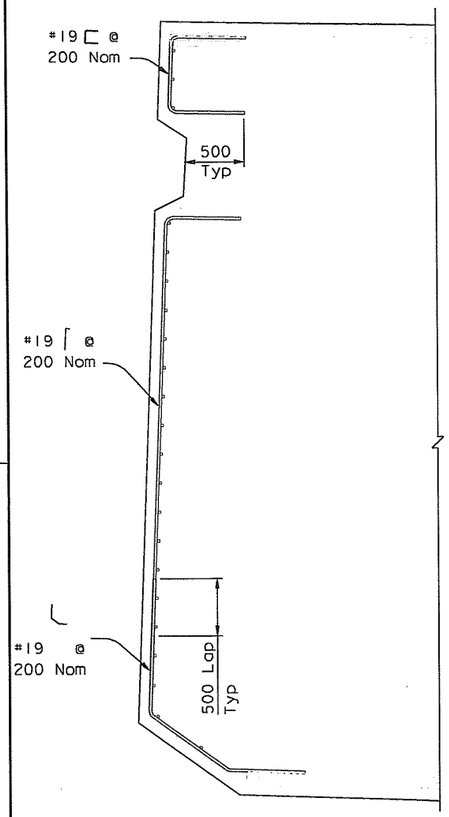

SECTION A-A

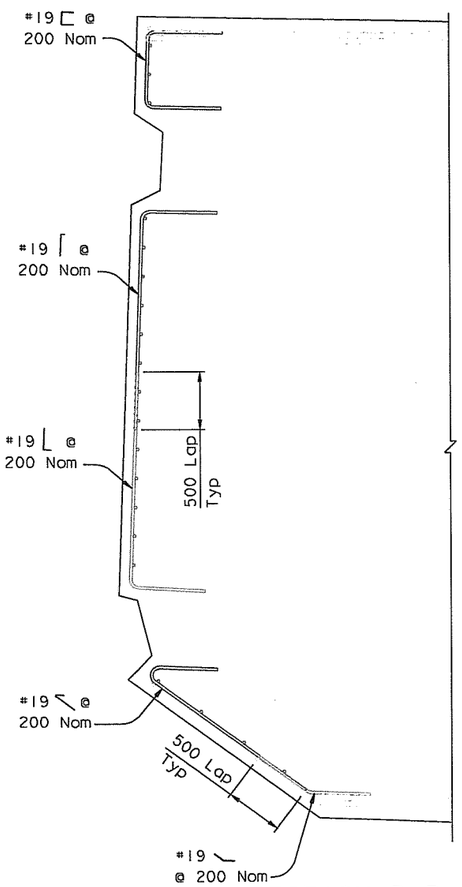

SECTION B-B

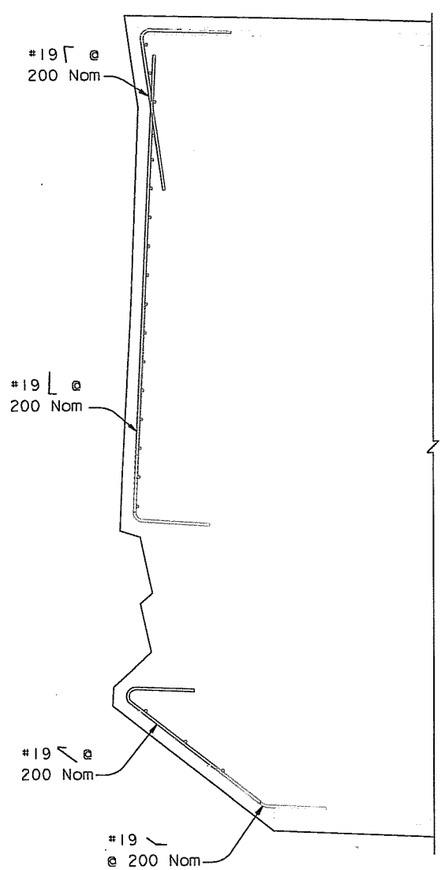

SECTION C-C

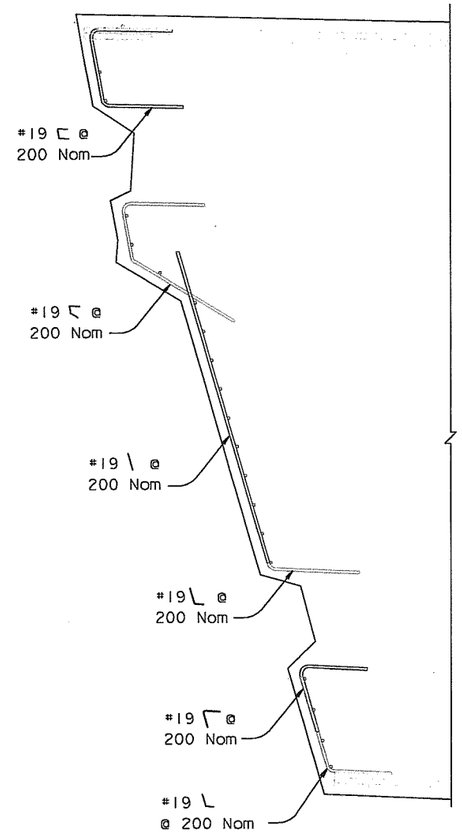

SECTION D-D

CAP END SKIN REINFORCEMENT

(North Side Shown, South Side Similar)

1:25

ALL DIMENSIONS ARE IN MILLIMETERS UNLESS OTHERWISE SHOWN

DIST.	COUNTY	ROUTE	KILOMETER POST TOTAL PROJECT	SHEET NO.	TOTAL SHEETS
04	SF	80	13.2/13.9	497S13	1204

REGISTERED ENGINEER - CIVIL

07-21-06
PLANS APPROVAL DATE

REGISTERED PROFESSIONAL ENGINEER — James P.Duxbury — No. C 64677 — Exp. 06/30/07 — CIVIL — STATE OF CALIFORNIA

The State of California or its officers or agents shall not be responsible for the accuracy or completeness of electronic copies of this plan sheet.

T.Y. LIN / MOFFATT & NICHOL
825 BATTERY STREET
SAN FRANCISCO, CA 94111

To get to the web site, go to: http://www.dot.ca.gov

MARK	DATE	REVISIONS	BY	CH'D	CCO#
0	07/21/06	W2 CAP BEAM ISD	JD	AS	23

CONTRACT CHANGE ORDER NO. 23
SHEET 61 OF 102

100 % PS&E

SAN FRANCISCO OAKLAND BAY BRIDGE
EAST SPAN SEISMIC SAFETY PROJECT
SELF-ANCHORED SUSPENSION BRIDGE
(SUPERSTRUCTURE & TOWER)

W2 CAP BEAM REINFORCEMENT DETAILS NO. 37

		BY	CHECKED
DESIGN		J. Duxbury	A. Sanjines
DETAILS		J. Duxbury	A. Sanjines
QUANTITIES		N. Vo	J. Duxbury

PREPARED FOR THE STATE OF CALIFORNIA
DEPARTMENT OF TRANSPORTATION

R. Vallzadeh/V. Toan/Y.L./W.L./F.C.
DESIGN OVERSIGHT
SIGN OFF DATE 07/21/06

R. Manzanarez
PROJECT ENGINEER

BRIDGE NO. 34-0006L/R
KILOMETER POST 13.2/13.9

CU 04
EA 0120F1

Rev. Date: 5-18-98

ORIGINAL SCALE IN MILLIMETERS FOR REDUCED PLANS 0 10 20 30 40 50 60 70 80 90 100

DISREGARD PRINTS BEARING EARLIER REVISION DATES →

REVISION DATES (PRELIMINARY STAGE ONLY): 07/21/06

SHEET 080S13 OF

FILE => I:\bb\04-0120I\sas\contract plans and cco\cco\cco#23\aecap35r-s.dgn

USERNAME => vlgnatovsk DATE PLOTTED => 10 MAY 2007 TIME PLOTTED => 10:19:06

NOTES:

1. East face and West face reinforcement not shown for clarity. See "W2 Cap Beam Reinforcement Details No. 19 to No. 25" sheets.
2. Blockout reinforcement not shown for clarity. See "W2 Cap Beam Blockout Details" sheets.

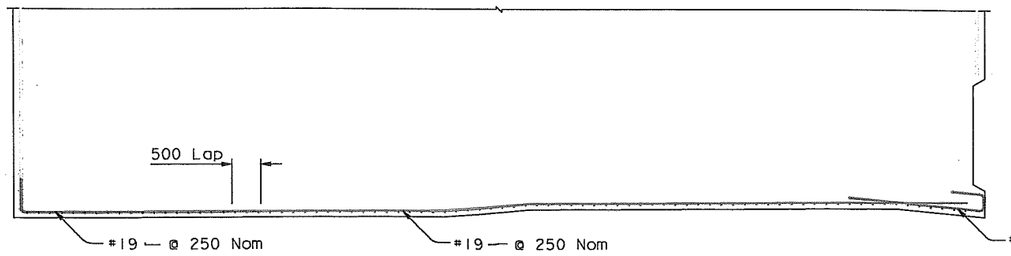

SECTION E-E

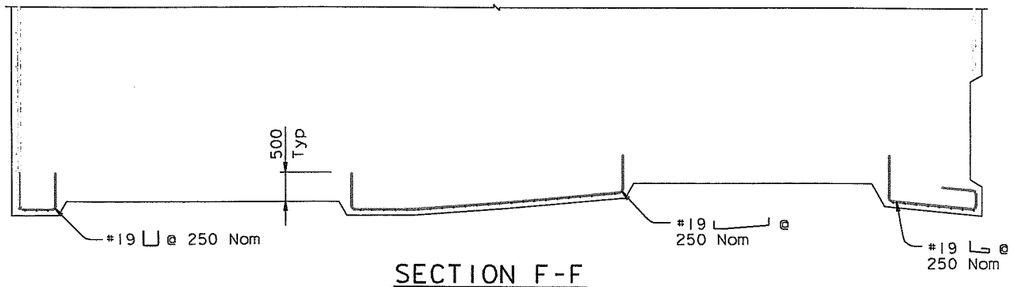

SECTION F-F

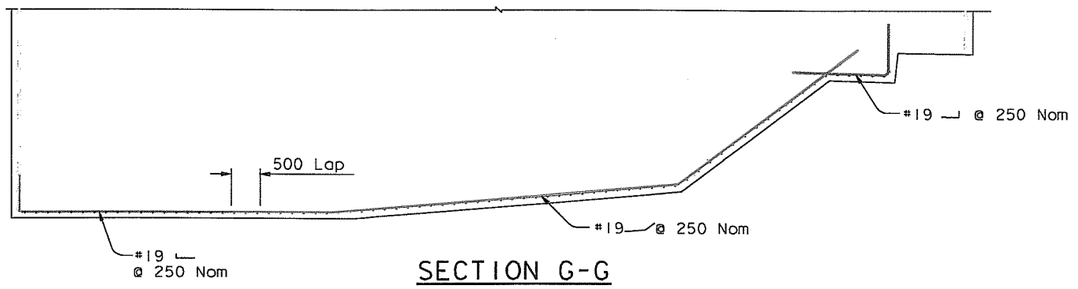

SECTION G-G

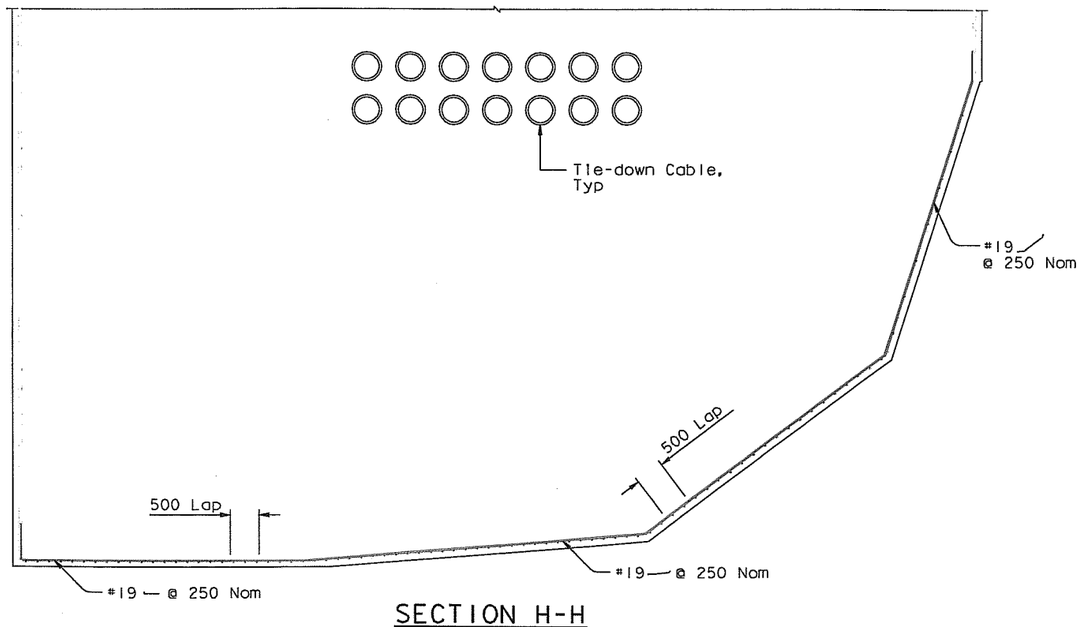

SECTION H-H

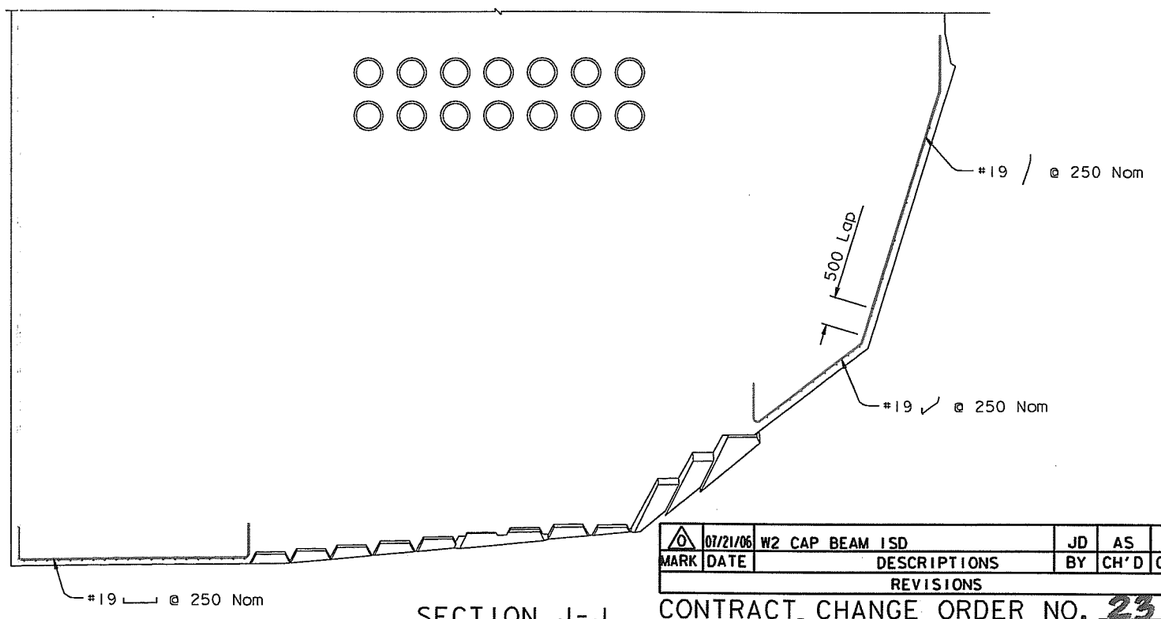

SECTION J-J

CAP END REINFORCEMENT

(North end Shown, South end Similar)

1:25

ALL DIMENSIONS ARE IN MILLIMETERS UNLESS OTHERWISE SHOWN

DIST.	COUNTY	ROUTE	KILOMETER POST TOTAL PROJECT	SHEET NO.	TOTAL SHEETS
04	SF	80	13.2/13.9	497514	1204

REGISTERED ENGINEER - CIVIL

07-21-06
PLANS APPROVAL DATE

REGISTERED PROFESSIONAL ENGINEER — James P. Duxbury — No. C 64677 — Exp. 06/30/07 — CIVIL — STATE OF CALIFORNIA

The State of California or its officers or agents shall not be responsible for the accuracy or completeness of electronic copies of this plan sheet.

T.Y. LIN / MOFFATT & NICHOL
825 BATTERY STREET
SAN FRANCISCO, CA 94111

To get to the web site, go to: http://www.dot.ca.gov

MARK	DATE	REVISIONS	BY	CH'D	CCO#
0	07/21/06	W2 CAP BEAM ISD	JD	AS	23

CONTRACT CHANGE ORDER NO. 23
SHEET 62 OF 102

SAN FRANCISCO OAKLAND BAY BRIDGE
EAST SPAN SEISMIC SAFETY PROJECT
SELF-ANCHORED SUSPENSION BRIDGE
(SUPERSTRUCTURE & TOWER)

W2 CAP BEAM REINFORCEMENT DETAILS NO. 38

DESIGN	BY J. Duxbury	CHECKED A. Sanjines
DETAILS	BY J. Duxbury	CHECKED A. Sanjines
QUANTITIES	BY N. Vo	CHECKED J. Duxbury

PREPARED FOR THE STATE OF CALIFORNIA
DEPARTMENT OF TRANSPORTATION

R. Valizadeh/V. Toan/Y.L./W.L./F.C.
DESIGN OVERSIGHT
SIGN OFF DATE 07/21/06

R. Manzanarez
PROJECT ENGINEER

BRIDGE NO. 34-0006L/R
KILOMETER POST 13.2/13.9

CU 04
EA 0120F1

Rev. Date: 5-18-98

ORIGINAL SCALE IN MILLIMETERS FOR REDUCED PLANS 0 10 20 30 40 50 60 70 80 90 100

DISREGARD PRINTS BEARING EARLIER REVISION DATES →

REVISION DATES (PRELIMINARY STAGE ONLY): 07/21/06

SHEET 080514 OF

FILE => I:\bb\04-012001\sas\contract plans and cco\cco\cco#23\aecap36r-s.dgn

100% PS&E

DATE PLOTTED => 10 MAY 2007 TIME PLOTTED => 10:19:42

USERNAME => vignotovs

NOTES:

1. East face and West face reinforcement not shown for clarity. See "W2 Cap Beam Reinforcement Details No. 19 to No. 25" sheets.

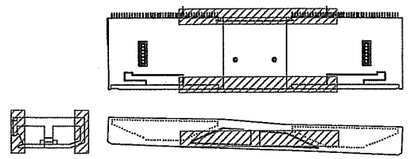

LOCATION KEY
NTS

DIST.	COUNTY	ROUTE	KILOMETER POST TOTAL PROJECT	SHEET NO.	TOTAL SHEETS
04	SF	80	13.2/13.9	497S15	1204

REGISTERED ENGINEER - CIVIL

07-21-06
PLANS APPROVAL DATE

REGISTERED PROFESSIONAL ENGINEER
James P. Duxbury
No. C 64677
Exp. 06/30/07
CIVIL
STATE OF CALIFORNIA

The State of California or its officers or agents shall not be responsible for the accuracy or completeness of electronic copies of this plan sheet.

T.Y. LIN / MOFFATT & NICHOL
825 BATTERY STREET
SAN FRANCISCO, CA 94111

To get to the web site, go to: http://www.dot.ca.gov

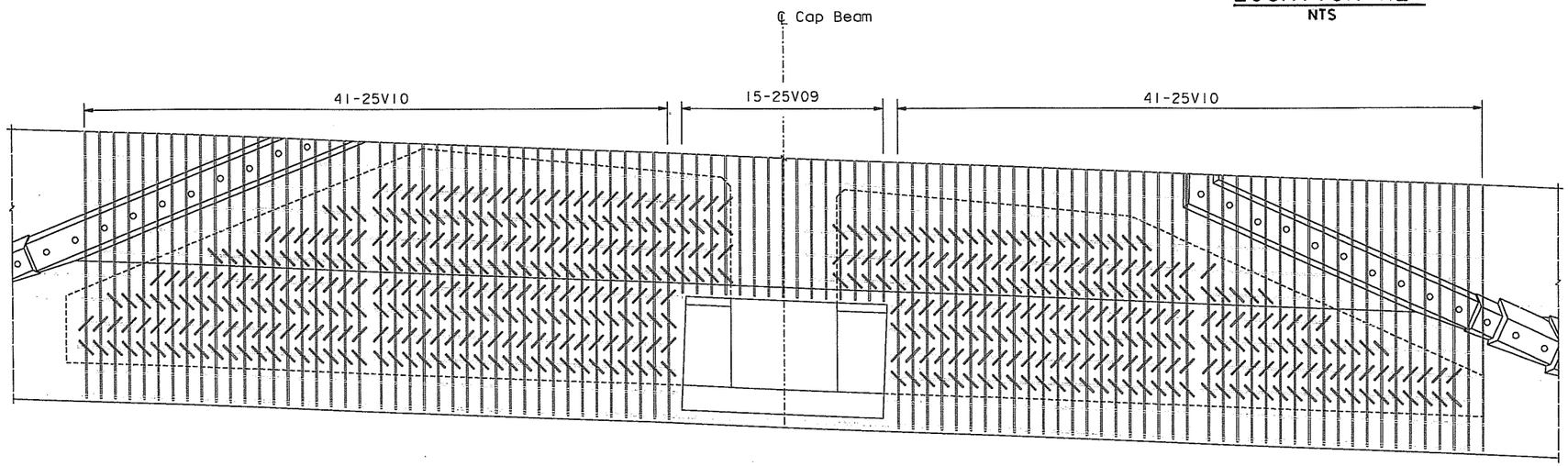

WEST FACE SKIN REINFORCEMENT (INTERIOR)
(Looking East)
NTS

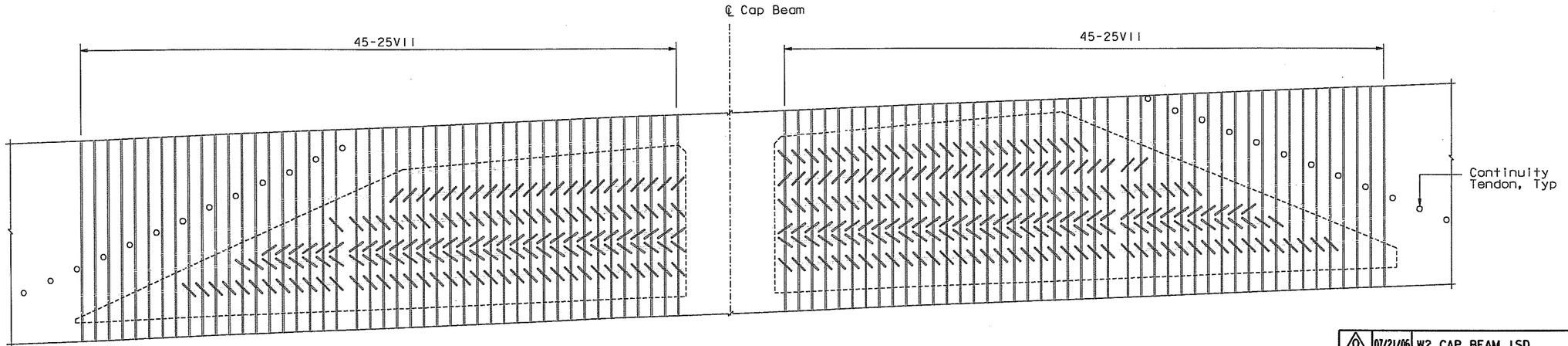

EAST FACE SKIN REINFORCEMENT (INTERIOR)
(Looking West)
NTS

MARK	DATE	DESCRIPTIONS	BY	CH'D	CCO#
0	07/21/06	W2 CAP BEAM ISD	JD	AS	23

REVISIONS

CONTRACT CHANGE ORDER NO. 23
SHEET 63 OF 102

ALL DIMENSIONS ARE IN MILLIMETERS UNLESS OTHERWISE SHOWN

SAN FRANCISCO OAKLAND BAY BRIDGE
EAST SPAN SEISMIC SAFETY PROJECT
SELF-ANCHORED SUSPENSION BRIDGE
(SUPERSTRUCTURE & TOWER)

W2 CAP BEAM REINFORCEMENT DETAILS NO. 39

R. Valizadeh/V. Toan/Y.L./W.L./F.C.
DESIGN OVERSIGHT
Reza Valizadeh / Vong Toan / Y. Liu
SIGN OFF DATE 07/21/06

	BY	CHECKED
DESIGN	J. Duxbury	A. Sanjines
DETAILS	J. Duxbury	A. Sanjines
QUANTITIES	N. Vo	J. Duxbury

PREPARED FOR THE STATE OF CALIFORNIA DEPARTMENT OF TRANSPORTATION

R. Manzanarez
PROJECT ENGINEER

BRIDGE NO. 34-0006L/R
KILOMETER POST 13.2/13.9

Rev. Date: 5-18-98

ORIGINAL SCALE IN MILLIMETERS FOR REDUCED PLANS 0 10 20 30 40 50 60 70 80 90 100

CU 04
EA 0120F1

DISREGARD PRINTS BEARING EARLIER REVISION DATES 07/21/06

REVISION DATES (PRELIMINARY STAGE ONLY)

SHEET 080S15 OF

FILE => I:\bb\04-012001\sas\contract plans and cco\cco\cco#23\aecap37r-s.dgn

100 % PS&E

USERNAME => vignatovs DATE PLOTTED => 10 MAY 2007 TIME PLOTTED => 10:20:21

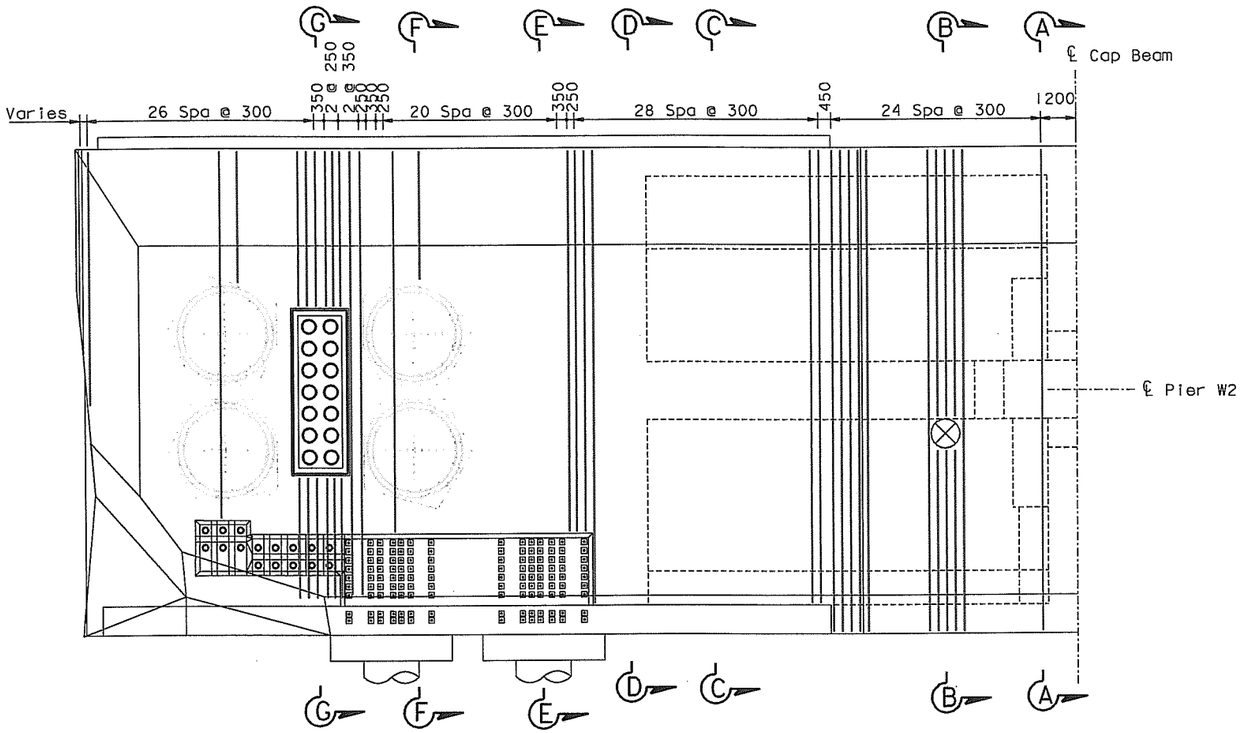

HORIZONTAL STIRRUP REINFORCEMENT PLAN (NORTH) (LAYERS 4-15)

(South Side Similar)

1:100

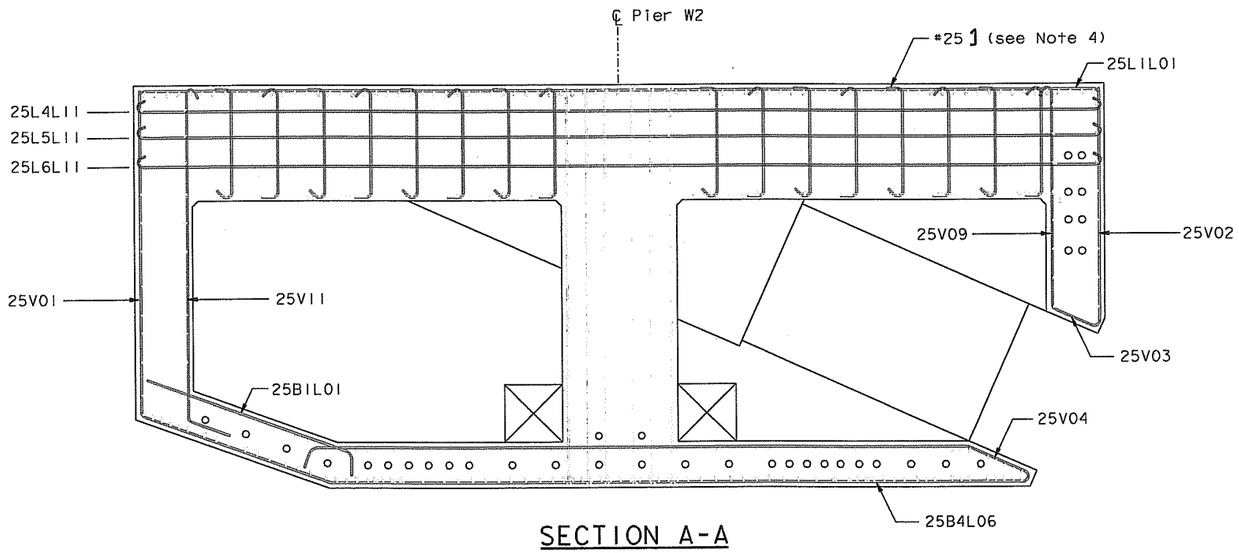

SECTION A-A

1:50

NOTES:

1. For Section B-B and C-C, see "W2 Cap Beam Reinforcement Details No. 41" sheet.
2. For Section D-D and E-E, see "W2 Cap Beam Reinforcement Details No. 42" sheet.
3. For Section F-F and G-G, see "W2 Cap Beam Reinforcement Details No. 43" sheet.
4. For Top Slab Stirrup Plan, see "W2 Cap Beam Reinforcement Details No. 8" sheet.

ALL DIMENSIONS ARE IN MILLIMETERS UNLESS OTHERWISE SHOWN

DIST.	COUNTY	ROUTE	KILOMETER POST TOTAL PROJECT	SHEET NO.	TOTAL SHEETS
04	SF	80	13.2/13.9	497516	1204

REGISTERED ENGINEER - CIVIL

07-21-06

PLANS APPROVAL DATE

James P. Duxbury No. C 64677 Exp. 06/30/07 CIVIL — REGISTERED PROFESSIONAL ENGINEER — STATE OF CALIFORNIA

The State of California or its officers or agents shall not be responsible for the accuracy or completeness of electronic copies of this plan sheet.

T.Y. LIN / MOFFATT & NICHOL
825 BATTERY STREET
SAN FRANCISCO, CA 94111

To get to the web site, go to: http://www.dot.ca.gov

MARK	DATE	REVISIONS	BY	CH'D	CCO#
0	07/21/06	W2 CAP BEAM ISD	JD	AS	23

CONTRACT CHANGE ORDER NO. 23

SHEET 64 OF 102

100 % PS&E

TIME PLOTTED => 10:21:07

DATE PLOTTED => 10 MAY 2007

USERNAME => vignatovs

R. Valizadeh/V. Toan/Y.L./W.L./F.C.
DESIGN OVERSIGHT
Reza Valizadeh /s/ Vong Toan / Y. Liu
SIGN OFF DATE 07/21/06

	BY	CHECKED
DESIGN	J. Duxbury	A. Sanjines
DETAILS	J. Duxbury	A. Sanjines
QUANTITIES	N. Vo	J. Duxbury

PREPARED FOR THE STATE OF CALIFORNIA
DEPARTMENT OF TRANSPORTATION

R. Manzanarez
PROJECT ENGINEER

BRIDGE NO. 34-0006L/R
KILOMETER POST 13.2/13.9

CU 04
EA 0120F1

SAN FRANCISCO OAKLAND BAY BRIDGE
EAST SPAN SEISMIC SAFETY PROJECT
SELF-ANCHORED SUSPENSION BRIDGE
(SUPERSTRUCTURE & TOWER)

W2 CAP BEAM REINFORCEMENT DETAILS NO. 40

Rev. Date: 5-18-98

ORIGINAL SCALE IN MILLIMETERS FOR REDUCED PLANS 0 10 20 30 40 50 60 70 80 90 100

DISREGARD PRINTS BEARING EARLIER REVISION DATES

REVISION DATES (PRELIMINARY STAGE ONLY): 07/21/06

SHEET 080S16 OF

FILE => I:\bb\04-012001\sas\contract plans and cco\cco\cco#23\aecap39r-s.dgn

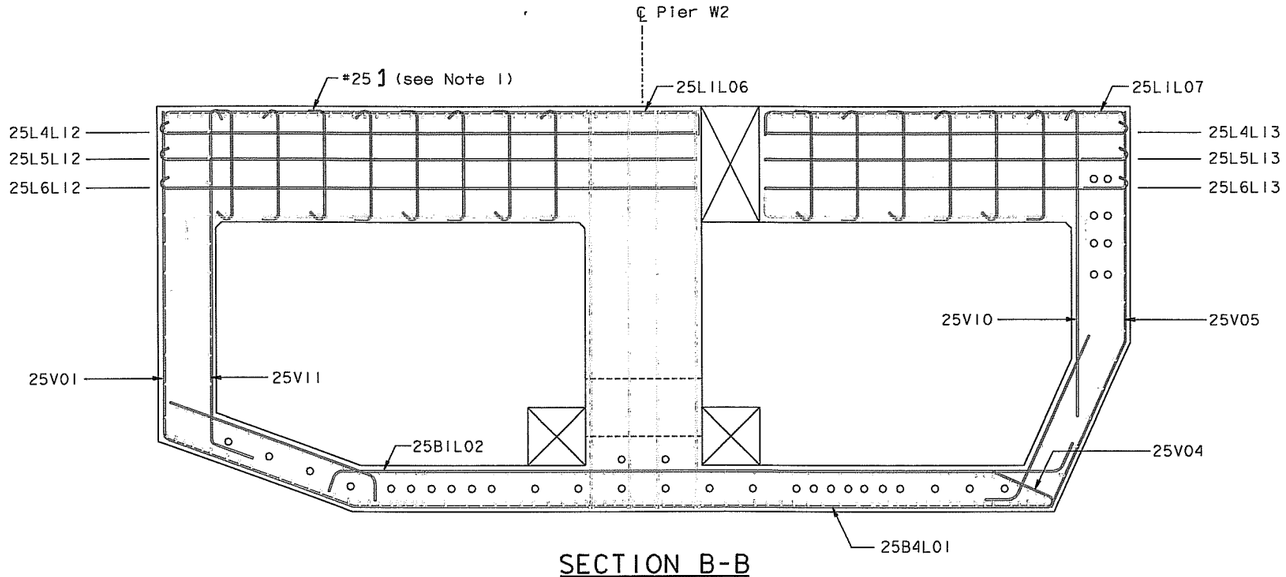

SECTION B-B
1:50

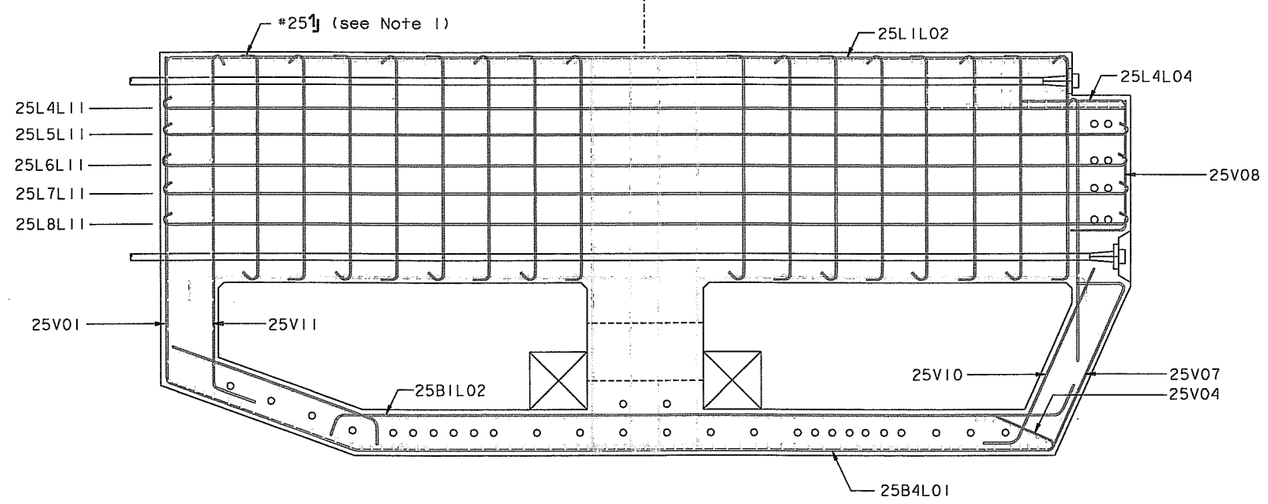

SECTION C-C
1:50

NOTES:

1. For Top Slab Stirrup Plan, see "W2 Cap Beam Reinforcement Details No. 8" sheet.

MARK	DATE	DESCRIPTIONS	BY	CH'D	CCO#
		REVISIONS			
0	07/21/06	W2 CAP BEAM ISD	JD	AS	23

CONTRACT CHANGE ORDER NO. 23
SHEET 65 OF 102

ALL DIMENSIONS ARE IN MILLIMETERS UNLESS OTHERWISE SHOWN

SAN FRANCISCO OAKLAND BAY BRIDGE
EAST SPAN SEISMIC SAFETY PROJECT
SELF-ANCHORED SUSPENSION BRIDGE
(SUPERSTRUCTURE & TOWER)

W2 CAP BEAM REINFORCEMENT DETAILS NO. 41

DIST.	COUNTY	ROUTE	KILOMETER POST TOTAL PROJECT	SHEET NO.	TOTAL SHEETS
04	SF	80	13.2/13.9	497S17	1204

REGISTERED ENGINEER - CIVIL
James P. Duxbury
No. C 64677
Exp. 06/30/07
CIVIL
PROFESSIONAL ENGINEER
STATE OF CALIFORNIA
07-21-06
PLANS APPROVAL DATE

The State of California or its officers or agents shall not be responsible for the accuracy or completeness of electronic copies of this plan sheet.

T.Y. LIN / MOFFATT & NICHOL
825 BATTERY STREET
SAN FRANCISCO, CA 94111

To get to the web site, go to: http://www.dot.ca.gov

DESIGN	BY J. Duxbury	CHECKED A. Sanjines	PREPARED FOR THE STATE OF CALIFORNIA DEPARTMENT OF TRANSPORTATION	R. Manzanarez, PROJECT ENGINEER
DETAILS	BY J. Duxbury	CHECKED A. Sanjines		BRIDGE NO. 34-0006L/R
QUANTITIES	BY N. Vo	CHECKED J. Duxbury		KILOMETER POST 13.2/13.9

R. Vallzadeh/V. Toon/Y.L./W.L./F.C.
DESIGN OVERSIGHT
SIGN OFF DATE 07/21/06

CU 04
EA 0120F1

Rev. Date: 5-18-98

ORIGINAL SCALE IN MILLIMETERS FOR REDUCED PLANS 0 10 20 30 40 50 60 70 80 90 100

DISREGARD PRINTS BEARING EARLIER REVISION DATES →

REVISION DATES (PRELIMINARY STAGE ONLY): 01/21/06

SHEET 080S17 OF

FILE => I:\bb\04-0120F1\sas\contract plans and cco\cco\cco#23\aecap40r-s.dgn

USERNAME => vlgnatovs DATE PLOTTED => 10 MAY 2007 TIME PLOTTED => 10:21:39

100 % PS&E

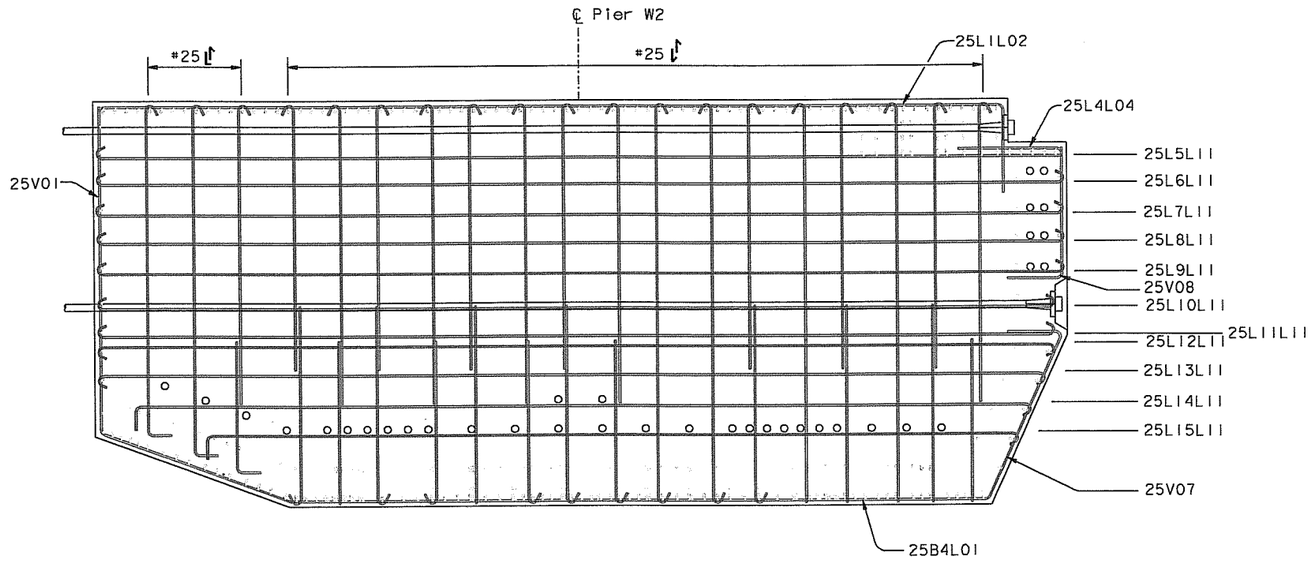

SECTION D-D
1:50

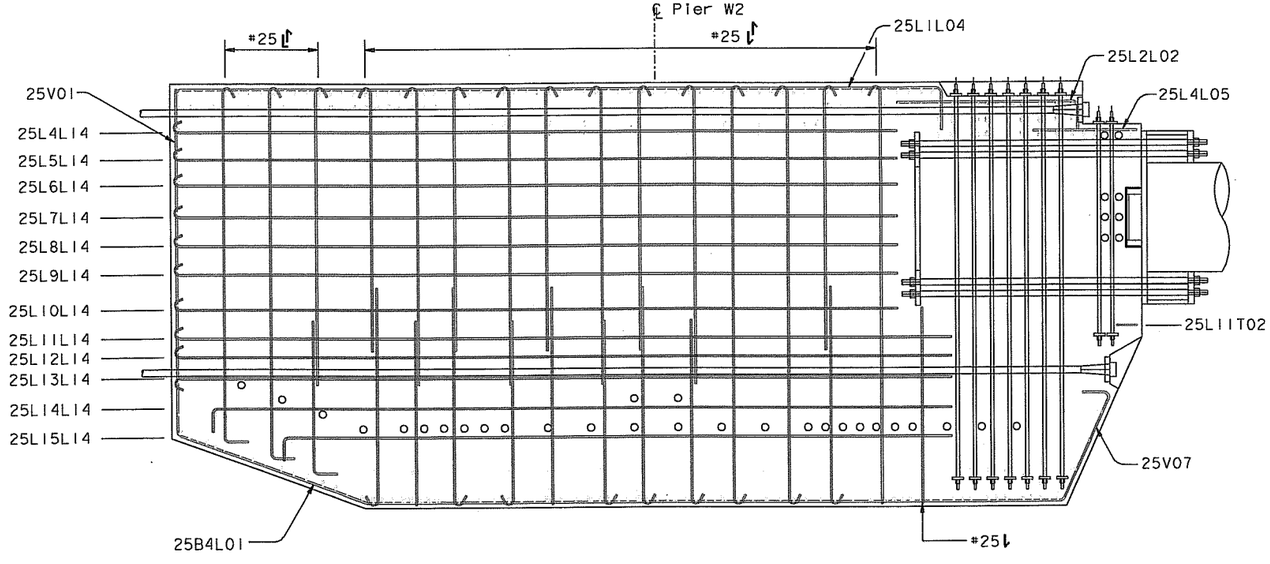

SECTION E-E
1:50

NOTES:

1. For Top Slab Stirrup Plan, see "W2 Cap Beam Reinforcement Details No.8" sheet.

MARK	DATE	REVISIONS	BY	CH'D	CCO#
0	01/21/06	W2 CAP BEAM ISD	JD	AS	23

CONTRACT CHANGE ORDER NO. 23
SHEET 66 OF 102

DIST.	COUNTY	ROUTE	KILOMETER POST TOTAL PROJECT	SHEET NO.	TOTAL SHEETS
04	SF	80	13.2/13.9	497518	1204

REGISTERED ENGINEER - CIVIL
James P. Duxbury
07-21-06
PLANS APPROVAL DATE

REGISTERED PROFESSIONAL ENGINEER
James P. Duxbury
No. C 64677
Exp. 06/30/07
CIVIL
STATE OF CALIFORNIA

The State of California or its officers or agents shall not be responsible for the accuracy or completeness of electronic copies of this plan sheet.

T.Y. LIN / MOFFATT & NICHOL
825 BATTERY STREET
SAN FRANCISCO, CA 94111

To get to the web site, go to: http://www.dot.ca.gov

ALL DIMENSIONS ARE IN MILLIMETERS UNLESS OTHERWISE SHOWN

SAN FRANCISCO OAKLAND BAY BRIDGE
EAST SPAN SEISMIC SAFETY PROJECT
SELF-ANCHORED SUSPENSION BRIDGE
(SUPERSTRUCTURE & TOWER)

W2 CAP BEAM REINFORCEMENT DETAILS NO. 42

R. Vallzadeh/V. Toan/Y.L./W.L./F.C.
DESIGN OVERSIGHT
SIGN OFF DATE 07/21/06

	BY	CHECKED
DESIGN	J. Duxbury	A. Sanjines
DETAILS	J. Duxbury	A. Sanjines
QUANTITIES	N. Vo	J. Duxbury

PREPARED FOR THE STATE OF CALIFORNIA
DEPARTMENT OF TRANSPORTATION

R. Manzanarez
PROJECT ENGINEER

BRIDGE NO. 34-0006L/R
KILOMETER POST 13.2/13.9

CU 04
EA 0120F1

DISREGARD PRINTS BEARING EARLIER REVISION DATES →
REVISION DATES (PRELIMINARY STAGE ONLY): 01/21/06
SHEET 080518 OF

ORIGINAL SCALE IN MILLIMETERS FOR REDUCED PLANS 0 10 20 30 40 50 60 70 80 90 100

Rev. Date: 5-18-98

FILE => I:\bb\04-012001\sas\contract plans and cco\cco\cco#23\aecap4ir-s.dgn

100 % PS&E
TIME PLOTTED => 10:22:20
DATE PLOTTED => 10 MAY 2007
USERNAME => vignatovs

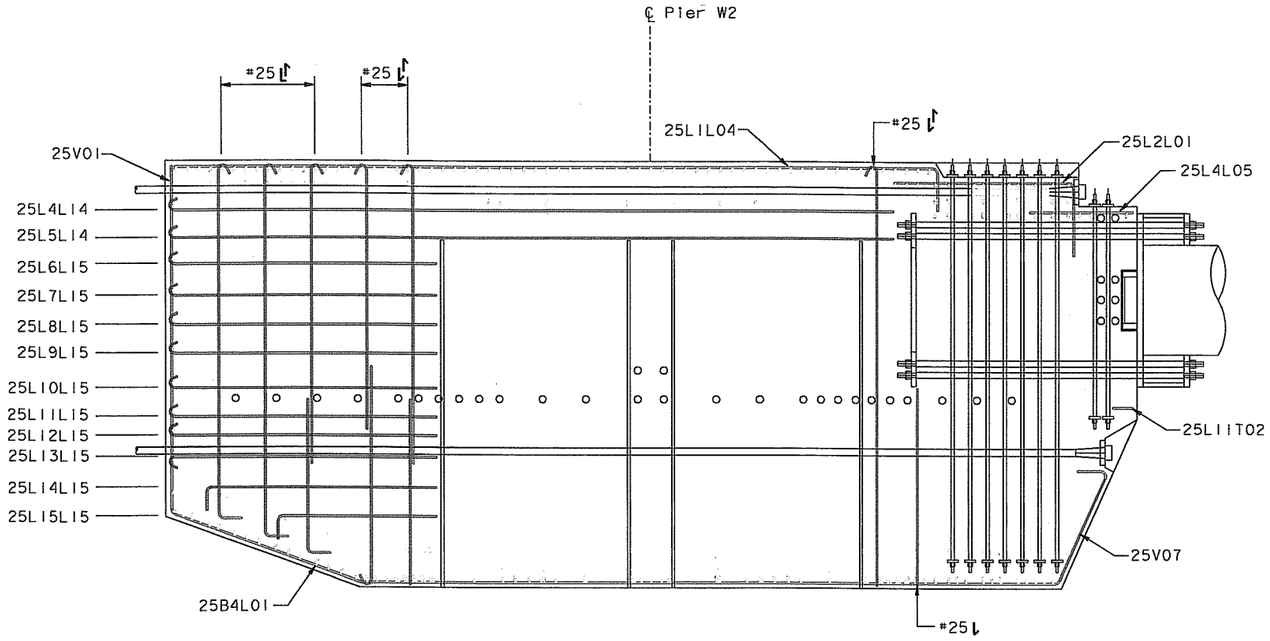

SECTION F-F
1:50

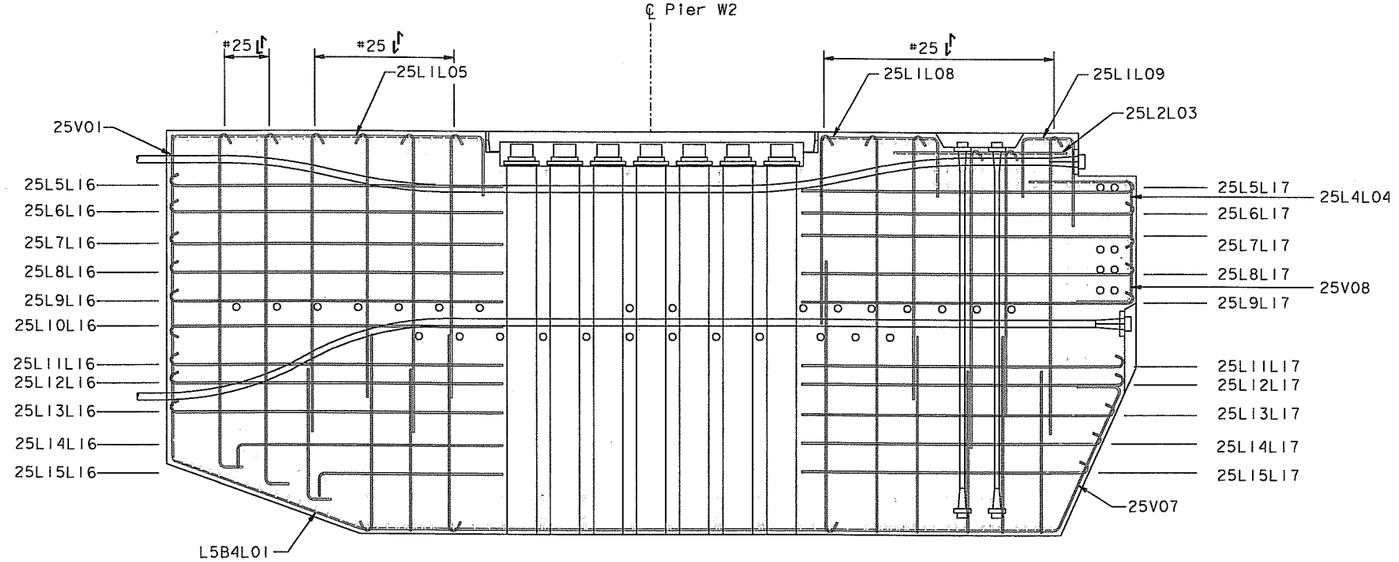

SECTION G-G
1:50

NOTES:

1. For Top Slab Stirrup Plan, see "W2 Cap Beam Reinforcement Details No.8" sheet.

MARK	DATE	DESCRIPTIONS	BY	CH'D	CCO#
		REVISIONS			
0	07/21/06	W2 CAP BEAM ISD	JD	AS	23

CONTRACT CHANGE ORDER NO. 23
SHEET 67 OF 102

ALL DIMENSIONS ARE IN MILLIMETERS UNLESS OTHERWISE SHOWN

DIST.	COUNTY	ROUTE	KILOMETER POST TOTAL PROJECT	SHEET NO.	TOTAL SHEETS
04	SF	80	13.2/13.9	497S19	1204

REGISTERED ENGINEER - CIVIL
James P. Duxbury
No. C 64677
Exp. 06/30/07
CIVIL
07-21-06
PLANS APPROVAL DATE

The State of California or its officers or agents shall not be responsible for the accuracy or completeness of electronic copies of this plan sheet.

T.Y. LIN / MOFFATT & NICHOL
825 BATTERY STREET
SAN FRANCISCO, CA 94111

To get to the web site, go to: http://www.dot.ca.gov

R. Valizadeh/V. Toan/Y.L./W.L./F.C.	DESIGN	BY J. Duxbury	CHECKED A. Sanjines
DESIGN OVERSIGHT	DETAILS	BY J. Duxbury	CHECKED A. Sanjines
Ryan Valiz 07/21/06 / Vong P. Toan / Y. Liu	QUANTITIES	BY N. Vo	CHECKED J. Duxbury
SIGN OFF DATE 07/21/06			

PREPARED FOR THE STATE OF CALIFORNIA
DEPARTMENT OF TRANSPORTATION

R. Manzanarez
PROJECT ENGINEER

BRIDGE NO. 34-0006L/R
KILOMETER POST 13.2/13.9

SAN FRANCISCO OAKLAND BAY BRIDGE
EAST SPAN SEISMIC SAFETY PROJECT
SELF-ANCHORED SUSPENSION BRIDGE
(SUPERSTRUCTURE & TOWER)

W2 CAP BEAM REINFORCEMENT DETAILS NO. 43

Rev. Date: 5-18-98

ORIGINAL SCALE IN MILLIMETERS FOR REDUCED PLANS 0 10 20 30 40 50 60 70 80 90 100

CU 04
EA 0120F1

DISREGARD PRINTS BEARING EARLIER REVISION DATES →

REVISION DATES (PRELIMINARY STAGE ONLY)										SHEET	OF
07/21/06										080S19	

FILE => I:\bb\04-0120F1\sas\contract plans and cco\cco\cco#23\aecap42r-s.dgn

USERNAME => vignotovs DATE PLOTTED => 10 MAY 2007 TIME PLOTTED => 10:22:54

100 % PS&E

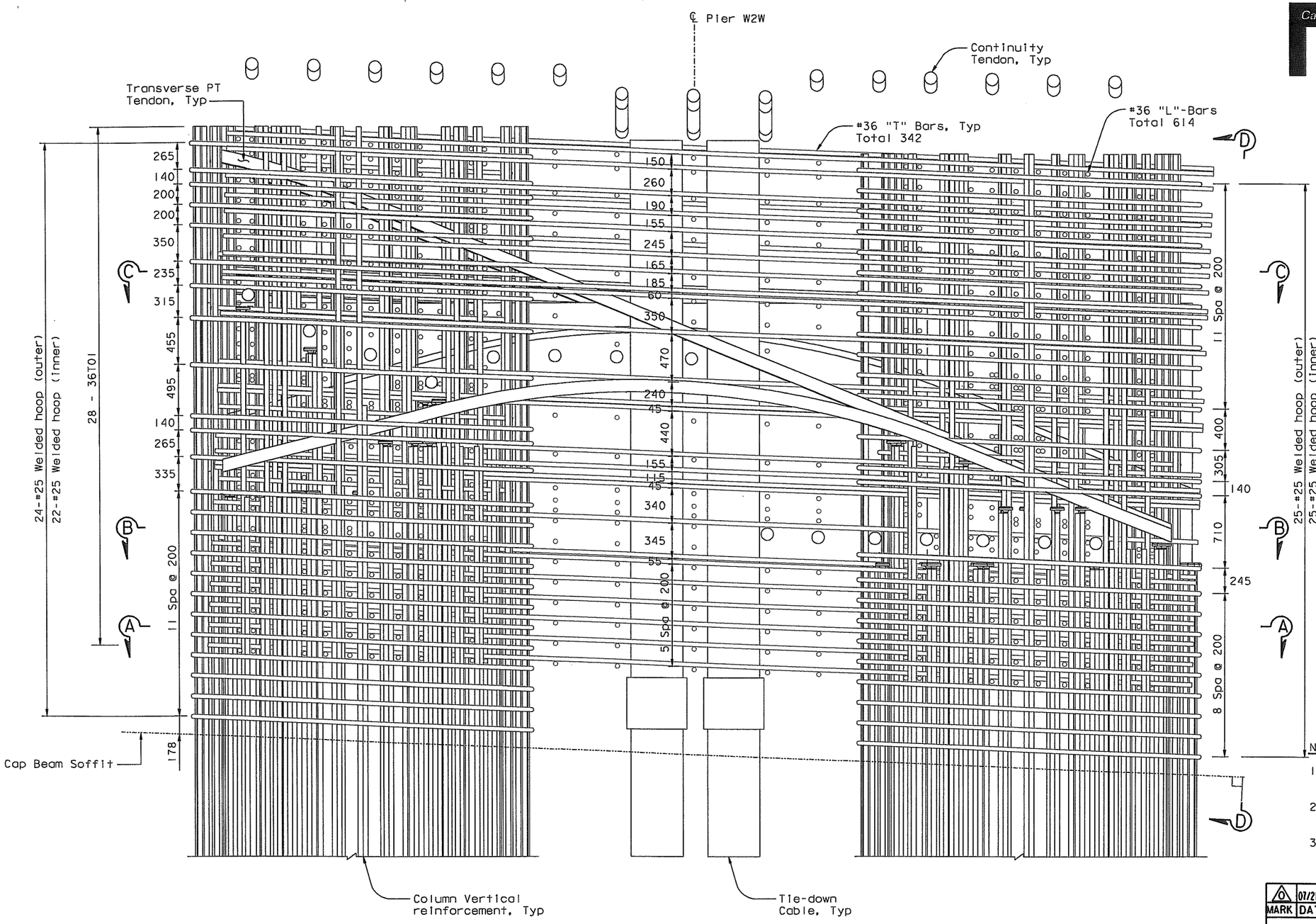

COLUMN REGION REINFORCEMENT (NORTH ELEVATION)

(Looking East)
1:20

ALL DIMENSIONS ARE IN MILLIMETERS UNLESS OTHERWISE SHOWN

NOTES:

1. For Section A-A thru C-C, see "W2 Cap Beam Reinforcement Details No. 46" sheet.
2. For Elevation D-D, see "W2 Cap Beam Reinforcement Details No. 47" sheet.
3. Column vertical reinforcement shall be cut to avoid PT ducts. Maximum clearance distance between top of bar and PT duct is 200.

DIST.	COUNTY	ROUTE	KILOMETER POST TOTAL PROJECT	SHEET NO.	TOTAL SHEETS
04	SF	80	13.2/13.9	497S20	1204

REGISTERED ENGINEER - CIVIL
James P. Duxbury
No. C 64677
Exp. 06/30/07
CIVIL
STATE OF CALIFORNIA
07-21-06
PLANS APPROVAL DATE

The State of California or its officers or agents shall not be responsible for the accuracy or completeness of electronic copies of this plan sheet.

T.Y. LIN / MOFFATT & NICHOL
825 BATTERY STREET
SAN FRANCISCO, CA 94111

To get to the web site, go to: http://www.dot.ca.gov

MARK	DATE	REVISIONS / DESCRIPTIONS	BY	CH'D	CCO#
0	07/21/06	W2 CAP BEAM ISD	JD	AS	23

CONTRACT CHANGE ORDER NO. 23
SHEET 68 OF 102

100 % PS&E

R. Valizadeh/V. Toan/Y.L./W.L./F.C.
DESIGN OVERSIGHT
SIGN OFF DATE 07/21/06

	BY	CHECKED
DESIGN	J. Duxbury	A. Sanjines
DETAILS	J. Duxbury	A. Sanjines
QUANTITIES	N. Vo	J. Duxbury

PREPARED FOR THE STATE OF CALIFORNIA
DEPARTMENT OF TRANSPORTATION

R. Manzanarez
PROJECT ENGINEER

BRIDGE NO. 34-0006L/R
KILOMETER POST 13.2/13.9

SAN FRANCISCO OAKLAND BAY BRIDGE
EAST SPAN SEISMIC SAFETY PROJECT
SELF-ANCHORED SUSPENSION BRIDGE
(SUPERSTRUCTURE & TOWER)
W2 CAP BEAM REINFORCEMENT DETAILS NO. 44

Rev. Date: 5-18-98

ORIGINAL SCALE IN MILLIMETERS FOR REDUCED PLANS 0 10 20 30 40 50 60 70 80 90 100

CU 04
EA 0120F1

DISREGARD PRINTS BEARING EARLIER REVISION DATES

REVISION DATES (PRELIMINARY STAGE ONLY): 07/21/06

SHEET 080S20 OF

FILE => I:\bb\04-012001\sas\contract plans and cco\cco\cco#23\aecap43r-s.dgn

USERNAME => vignatovs DATE PLOTTED => 10 MAY 2007 TIME PLOTTED => 10:23:44

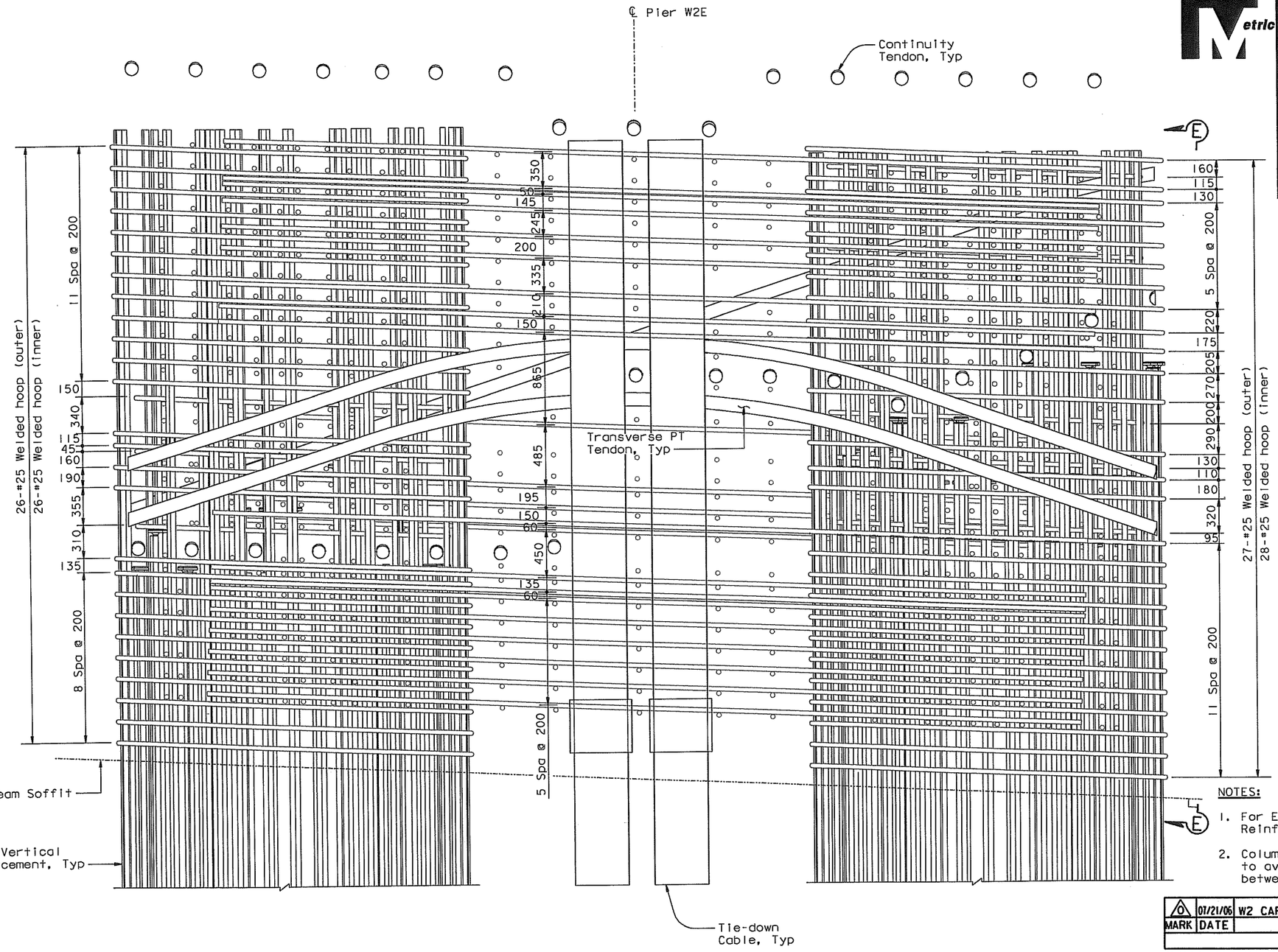

NOTES:

1. For Elevation E-E, see "W2 Cap Beam Reinforcement Details No. 47" sheet.
2. Column vertical reinforcement shall be cut to avoid PT ducts. Maximum clerance distance between top of bar and PT duct is 200.

COLUMN REGION REINFORCEMENT (SOUTH ELEVATION)

(Looking East)
1:20

ALL DIMENSIONS ARE IN MILLIMETERS UNLESS OTHERWISE SHOWN

DIST.	COUNTY	ROUTE	KILOMETER POST TOTAL PROJECT	SHEET NO.	TOTAL SHEETS
04	SF	80	13.2/13.9	497521	1204

REGISTERED ENGINEER - CIVIL
James P. Duxbury
No. C 64677
Exp. 06/30/07
CIVIL
STATE OF CALIFORNIA
07-21-06
PLANS APPROVAL DATE

The State of California or its officers or agents shall not be responsible for the accuracy or completeness of electronic copies of this plan sheet.

T.Y. LIN / MOFFATT & NICHOL
825 BATTERY STREET
SAN FRANCISCO, CA 94111

To get to the web site, go to: http://www.dot.ca.gov

MARK	DATE	REVISIONS DESCRIPTIONS	BY	CH'D	CCO#
0	07/21/06	W2 CAP BEAM ISD	JD	AS	23

CONTRACT CHANGE ORDER NO. 23
SHEET 69 OF 102

100 % PS&E

SAN FRANCISCO OAKLAND BAY BRIDGE
EAST SPAN SEISMIC SAFETY PROJECT
SELF-ANCHORED SUSPENSION BRIDGE
(SUPERSTRUCTURE & TOWER)

W2 CAP BEAM REINFORCEMENT DETAILS NO. 45

R. Vallzadeh/V. Toan/Y.L./W.L./F.C.
DESIGN OVERSIGHT
SIGN OFF DATE 07/21/06

	BY	CHECKED
DESIGN	J. Duxbury	A. SanJines
DETAILS	J. Duxbury	A. SanJines
QUANTITIES	N. Vo	J. Duxbury

PREPARED FOR THE STATE OF CALIFORNIA
DEPARTMENT OF TRANSPORTATION

R. Manzanarez
PROJECT ENGINEER

BRIDGE NO. 34-0006L/R
KILOMETER POST 13.2/13.9
CU 04
EA 0120F1

DISREGARD PRINTS BEARING EARLIER REVISION DATES → 01/21/06

SHEET 080521 OF

Rev. Date: 5-18-98

ORIGINAL SCALE IN MILLIMETERS FOR REDUCED PLANS 0 10 20 30 40 50 60 70 80 90 100

FILE => I:\bb\04-0120F1\sas\contract plans and cco\cco\cco#23\decap44r-s.dgn

USERNAME => vignatovsk DATE PLOTTED => 10 MAY 2007 TIME PLOTTED => 10:24:32

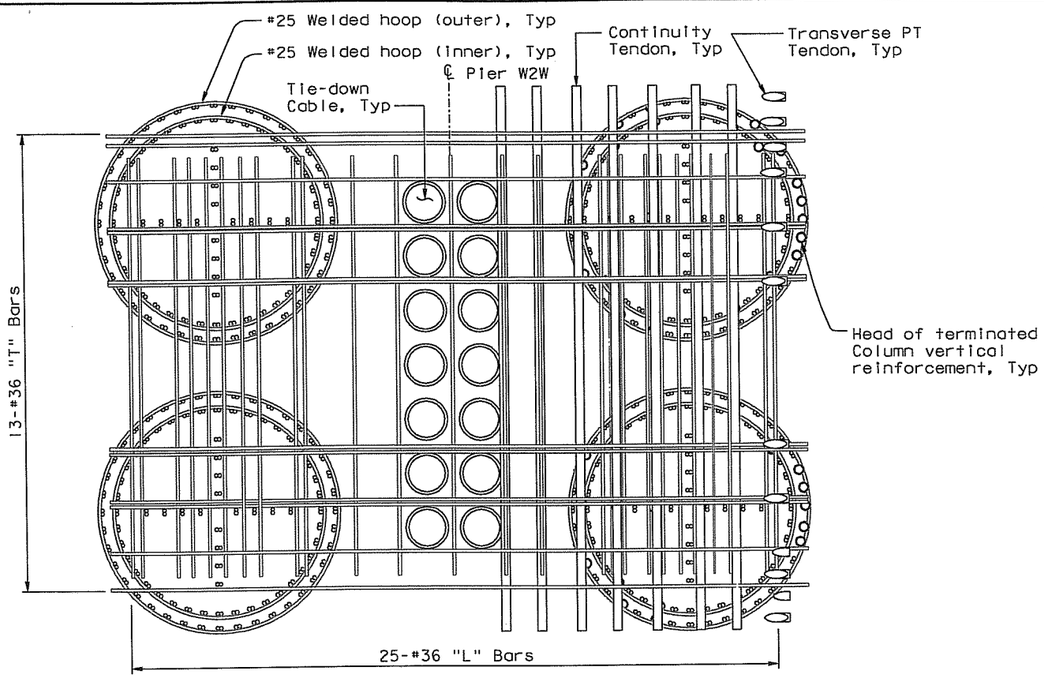

SECTION B-B

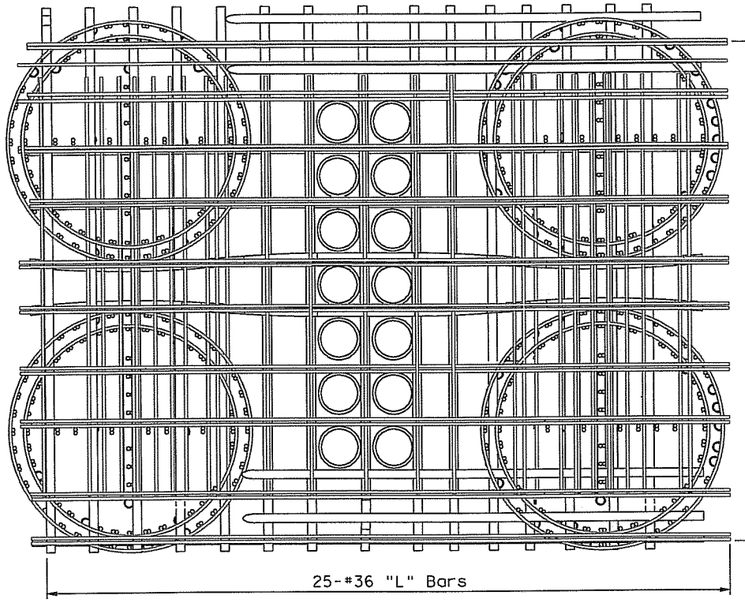

SECTION C-C

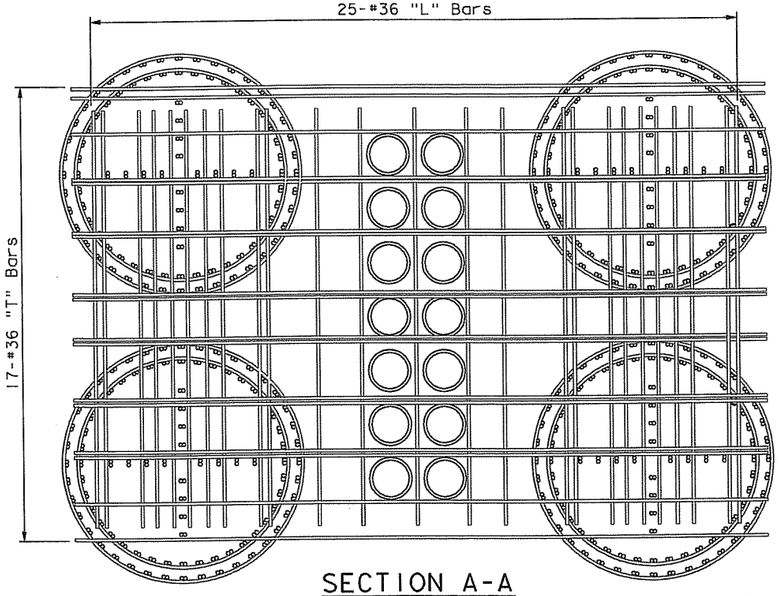

SECTION A-A

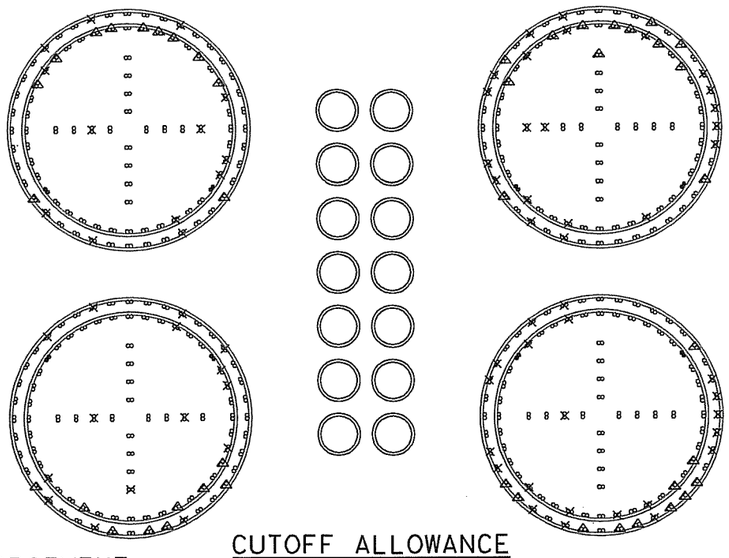

CUTOFF ALLOWANCE

COLUMN REGION REINFORCEMENT
(North Side Shown, South Side Similar)
1:40

ALL DIMENSIONS ARE IN MILLIMETERS UNLESS OTHERWISE SHOWN

LEGEND:

- ▪ #43 bundled bar
- ▪ Indicates #43 column reinforcement may be field cut below #43 Transverse cap beam reinforcement
- ⊠ Indicates #43 column reinforcement may be field cut below cap beam longitudinal PT duct
- ⧋ Indicates #43 column reinforcement may be field cut below cap beam transverse PTduct
- O Head of terminated column vertical reinforcement

NOTES:

1. Not all reinforcement shown for clarity.
2. Adjust reinforcement as required to clear column reinforcement.
3. Contractor may field cut existing column reinforcement identified in the cutoff allowance for column reinforcement detail.
4. Field cut #43 column reinforcement shall be fitted with field-installed round headed anchors, except as noted.
5. Prior to cutting any column reinforcement, the Contractor is required to submit locations and number of bars to be field cut for Engineer's review and approval.

DIST.	COUNTY	ROUTE	KILOMETER POST TOTAL PROJECT	SHEET NO.	TOTAL SHEETS
04	SF	80	13.2/13.9	497S22	1204

Caltrans Metric

REGISTERED ENGINEER - CIVIL
James P. Duxbury
No. C 64677
Exp. 06/30/07
CIVIL
STATE OF CALIFORNIA
07-21-06
PLANS APPROVAL DATE

The State of California or its officers or agents shall not be responsible for the accuracy or completeness of electronic copies of this plan sheet.

T.Y. LIN / MOFFATT & NICHOL
825 BATTERY STREET
SAN FRANCISCO, CA 94111

To get to the web site, go to: http://www.dot.ca.gov

MARK	DATE	REVISIONS	BY	CH'D	CCO#
0	07/21/06	W2 CAP BEAM ISD	JD	AS	23

CONTRACT CHANGE ORDER NO. 23
SHEET 70 OF 102

100 % PS&E

TIME PLOTTED => 10:25:12
DATE PLOTTED => 10 MAY 2007
USERNAME => vignatovs

R. Valizadeh/V. Toan/Y.L./W.L./F.C.
DESIGN OVERSIGHT
SIGN OFF DATE 07/21/06

	BY	CHECKED
DESIGN	J. Duxbury	A. Sanjines
DETAILS	J. Duxbury	A. Sanjines
QUANTITIES	N. Va	J. Duxbury

PREPARED FOR THE STATE OF CALIFORNIA
DEPARTMENT OF TRANSPORTATION

R. Manzanarez
PROJECT ENGINEER

BRIDGE NO. 34-0006L/R
KILOMETER POST 13.2/13.9

CU 04
EA 0120F1

SAN FRANCISCO OAKLAND BAY BRIDGE
EAST SPAN SEISMIC SAFETY PROJECT
SELF-ANCHORED SUSPENSION BRIDGE
(SUPERSTRUCTURE & TOWER)

W2 CAP BEAM REINFORCEMENT DETAILS NO. 46

Rev. Date: 5-18-98

ORIGINAL SCALE IN MILLIMETERS FOR REDUCED PLANS 0 10 20 30 40 50 60 70 80 90 100

DISREGARD PRINTS BEARING EARLIER REVISION DATES

REVISION DATES (PRELIMINARY STAGE ONLY) 07/21/06

SHEET 080S22 OF

FILE => I:\bb\04-0120F1\sas\contract plans and cco\cco\cco#23\deecap45r-s.dgn

NOTES:

1. For Section A-A thru C-C, see "W2 Cap Beam Reinforcement Details No. 46" sheet.
2. Tie-down cables not shown for clarity.

MARK	DATE	DESCRIPTIONS	JD BY	AS CH'D	23 CCO#
1	01/21/06	W2 CAP BEAM ISD			
		REVISIONS			

CONTRACT CHANGE ORDER NO. 23
SHEET 71 OF 102

DIST.	COUNTY	ROUTE	KILOMETER POST TOTAL PROJECT	SHEET NO.	TOTAL SHEETS
04	SF	80	13.2/13.9	497523	1204

REGISTERED ENGINEER - CIVIL
James P. Duxbury No. C 64677 Exp. 06/30/07 CIVIL STATE OF CALIFORNIA
07-21-06
PLANS APPROVAL DATE
The State of California or its officers or agents shall not be responsible for the accuracy or completeness of electronic copies of this plan sheet.

T.Y. LIN / MOFFATT & NICHOL
825 BATTERY STREET
SAN FRANCISCO, CA 94111

To get to the web site, go to: http://www.dot.ca.gov

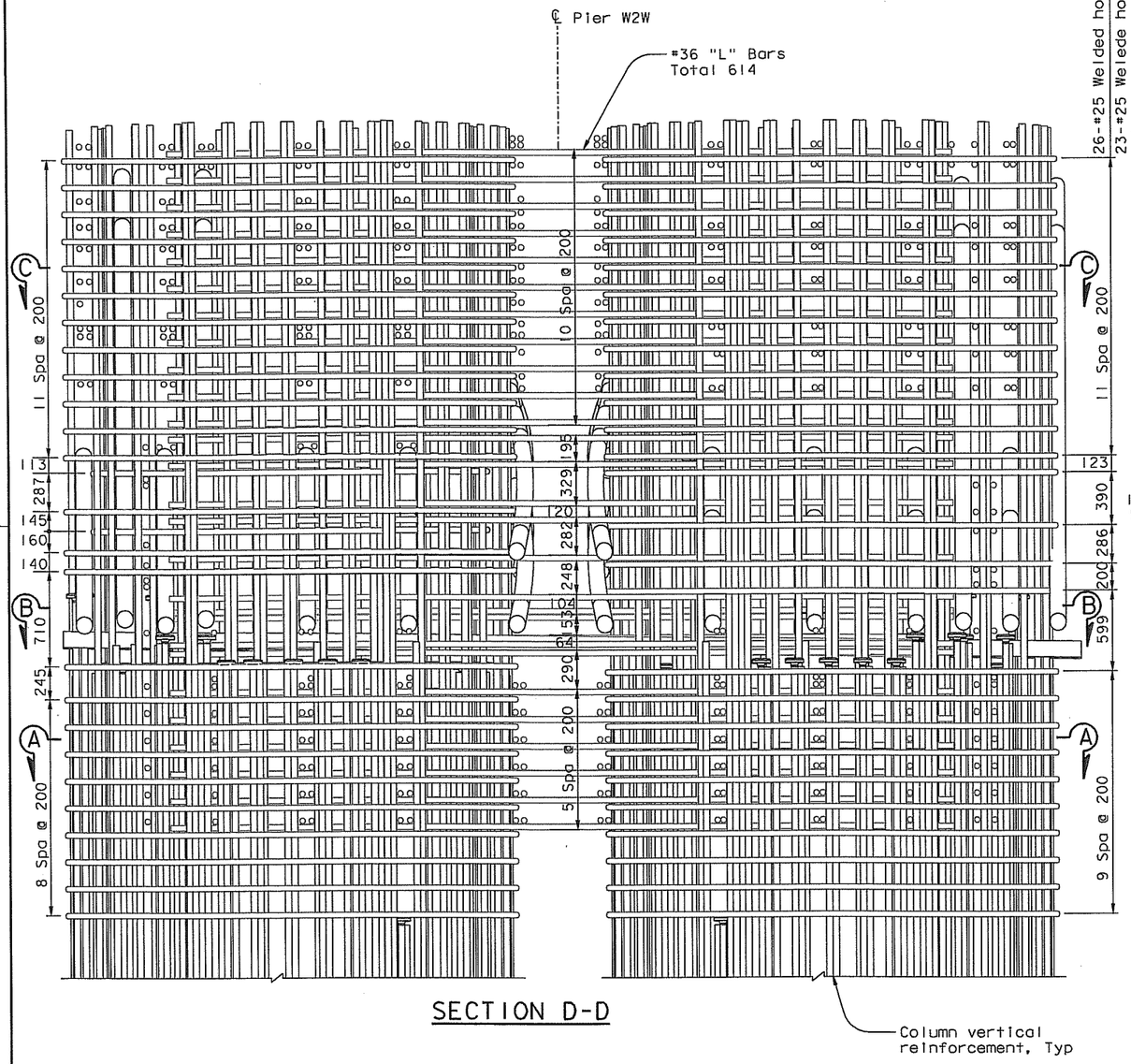

SECTION D-D

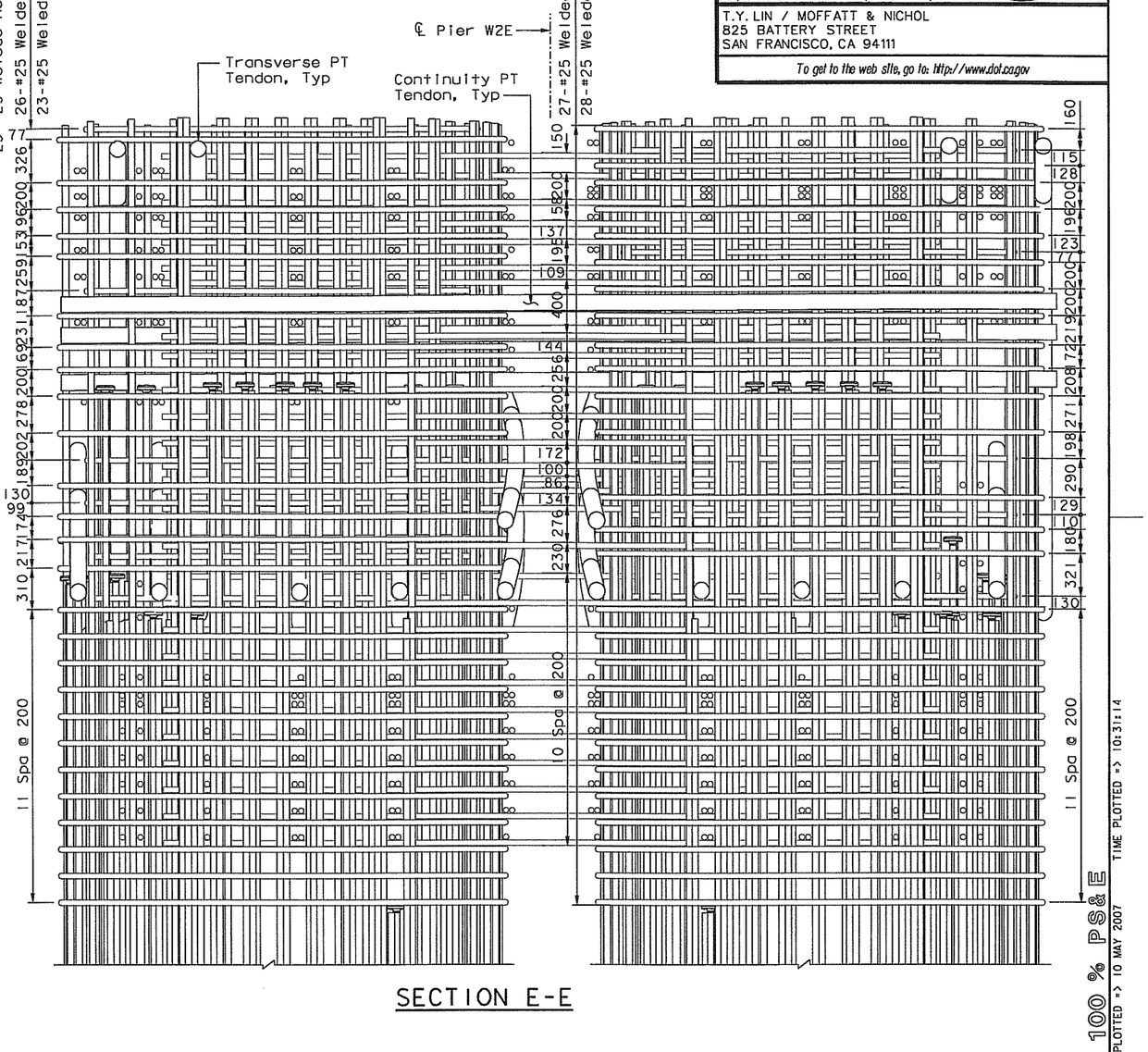

SECTION E-E

COLUMN REGION REINFORCEMENT

(Looking North)
1:20

ALL DIMENSIONS ARE IN MILLIMETERS UNLESS OTHERWISE SHOWN

SAN FRANCISCO OAKLAND BAY BRIDGE
EAST SPAN SEISMIC SAFETY PROJECT
SELF-ANCHORED SUSPENSION BRIDGE
(SUPERSTRUCTURE & TOWER)

W2 CAP BEAM REINFORCEMENT DETAILS NO. 47

DESIGN	BY J. Duxbury	CHECKED A. Sanjines	PREPARED FOR THE STATE OF CALIFORNIA DEPARTMENT OF TRANSPORTATION
DETAILS	BY J. Duxbury	CHECKED A. Sanjines	
QUANTITIES	BY N. Vo	CHECKED J. Duxbury	

R. Vallzadeh/V. Toan/Y. L./W. L./F. C.
DESIGN OVERSIGHT
SIGN OFF DATE 07/21/06

R. Manzanarez
PROJECT ENGINEER

BRIDGE NO. 34-0006L/R
KILOMETER POST 13.2/13.9

CU 04
EA 0120F1

Rev. Date: 5-18-98

ORIGINAL SCALE IN MILLIMETERS FOR REDUCED PLANS 0 10 20 30 40 50 60 70 80 90 100

DISREGARD PRINTS BEARING EARLIER REVISION DATES

REVISION DATES (PRELIMINARY STAGE ONLY): 01/21/06

SHEET 080523 OF

FILE => I:\bb\04-012001\sas\contract plans and cco\cco\cco#23\aecap46r-s.dgn

100 % PS&E
DATE PLOTTED => 10 MAY 2007 TIME PLOTTED => 10:31:14
USERNAME => vignatovs

DIST.	COUNTY	ROUTE	KILOMETER POST TOTAL PROJECT	SHEET NO.	TOTAL SHEETS
04	SF	80	13.2/13.9	497S24	1204

Caltrans Metric

REGISTERED ENGINEER - CIVIL

07-21-06

PLANS APPROVAL DATE

The State of California or its officers or agents shall not be responsible for the accuracy or completeness of electronic copies of this plan sheet.

REGISTERED PROFESSIONAL ENGINEER James P.Duxbury No. C 64677 Exp. 06/30/07 CIVIL STATE OF CALIFORNIA

T.Y. LIN / MOFFATT & NICHOL
825 BATTERY STREET
SAN FRANCISCO, CA 94111

To get to the web site, go to: http://www.dot.ca.gov

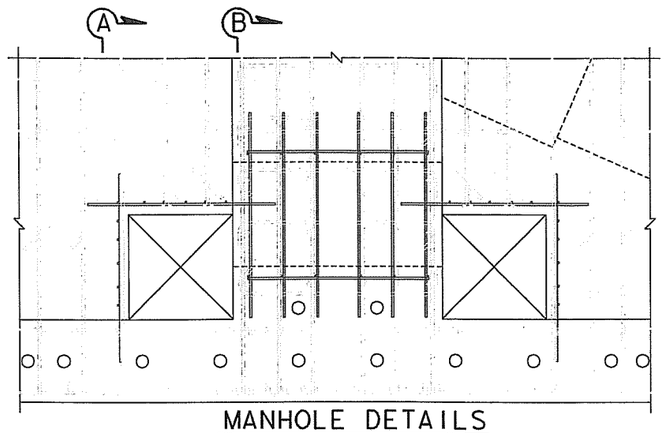

MANHOLE DETAILS

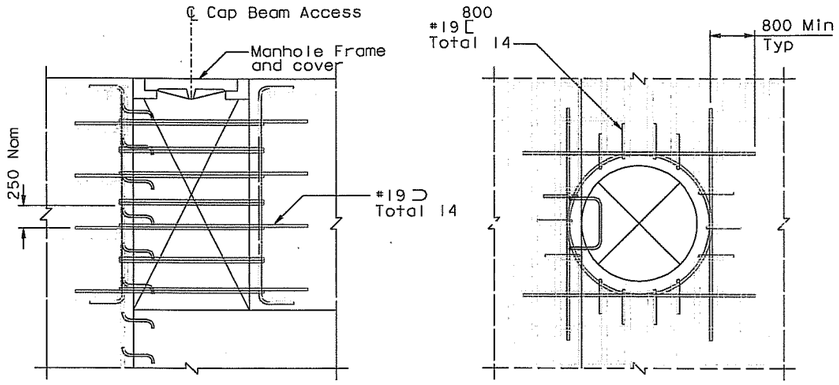

MANHOLE DETAILS

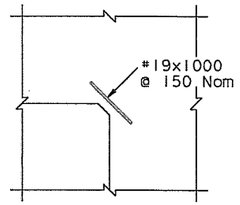

CORNER BAR DETAIL
(Upper cap beam void region)

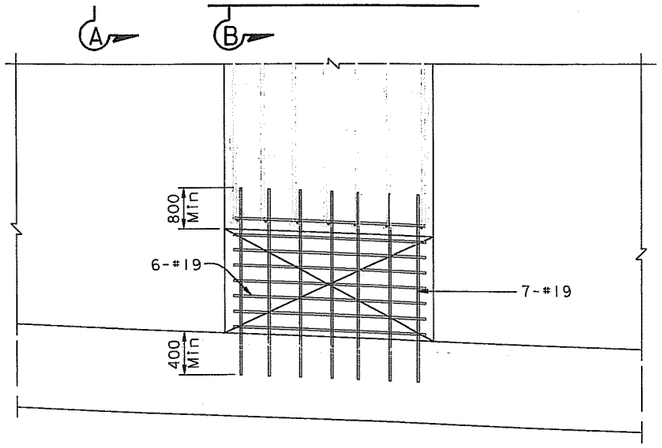

VIEW A-A

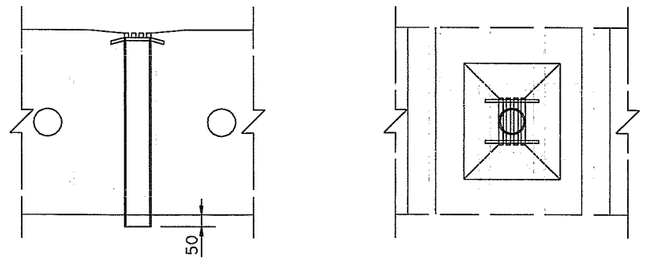

DRAIN DETAIL

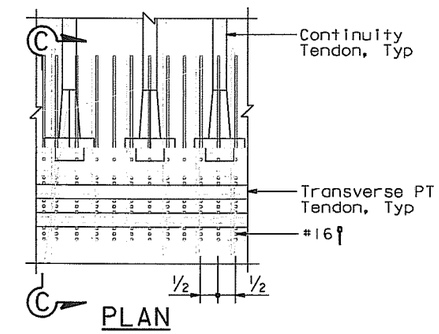

PLAN

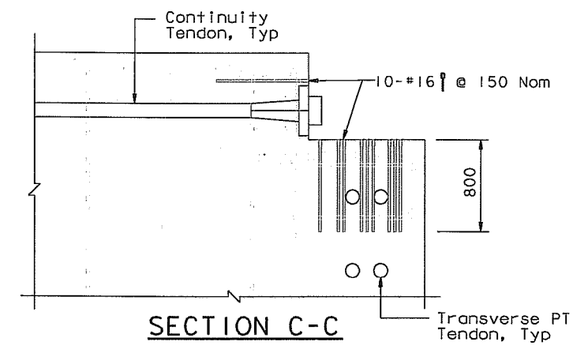

SECTION C-C

JOINT REINFORCEMENT DETAILS

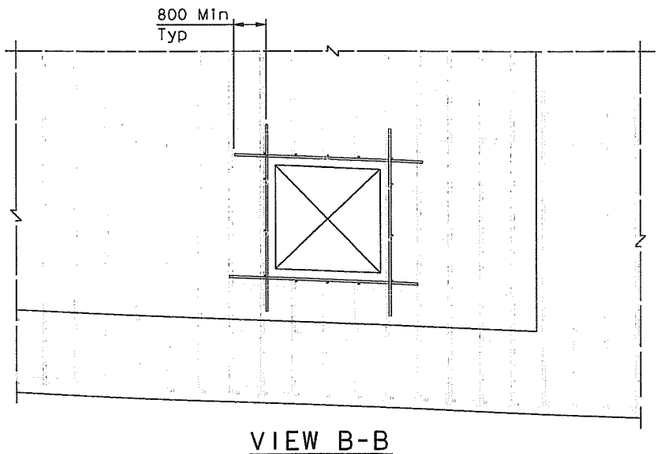

VIEW B-B

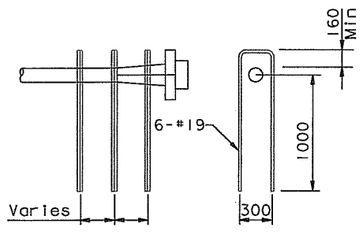

PT HAIR PIN DETAIL

NOTES:

1. Manhole frame and cover shall be cast iron. Complete assembly shall be galvanized after fabrication. Cover shall be supplied with bolt down or locking devices.

MARK	DATE	DESCRIPTIONS	BY	CH'D	CCO#
0	07/21/06	W2 CAP BEAM ISD	JD	AS	23

REVISIONS

CONTRACT CHANGE ORDER NO. 23
SHEET 72 OF 102

ALL DIMENSIONS ARE IN MILLIMETERS UNLESS OTHERWISE SHOWN

SAN FRANCISCO OAKLAND BAY BRIDGE
EAST SPAN SEISMIC SAFETY PROJECT
SELF-ANCHORED SUSPENSION BRIDGE
(SUPERSTRUCTURE & TOWER)

W2 CAP BEAM REINFORCEMENT DETAILS NO. 48

R. Valizadeh/V. Toan/Y.L./W.L./F.C.
DESIGN OVERSIGHT
Roger Valizadeh / Vong Toan / Y. Lin
SIGN OFF DATE 07/21/06

	BY	CHECKED
DESIGN	J. Duxbury	A. Sanjines
DETAILS	J. Duxbury	A. Sanjines
QUANTITIES	N. Vo	J. Duxbury

PREPARED FOR THE STATE OF CALIFORNIA DEPARTMENT OF TRANSPORTATION

R. Manzanarez
PROJECT ENGINEER

BRIDGE NO. 34-0006L/R
KILOMETER POST 13.2/13.9

Rev. Date: 5-18-98

ORIGINAL SCALE IN MILLIMETERS FOR REDUCED PLANS 0 10 20 30 40 50 60 70 80 90 100

CU 04
EA 0120F1

DISREGARD PRINTS BEARING EARLIER REVISION DATES

REVISION DATES (PRELIMINARY STAGE ONLY) 07/21/06

SHEET 080S24 OF

FILE => I:\bb\04-012001\sas\contract plans and cco\cco\cco#23\aecap47r-s.dgn

100 % PS&E

USERNAME => vignatovsk DATE PLOTTED => 10 MAY 2007 TIME PLOTTED => 10:32:02

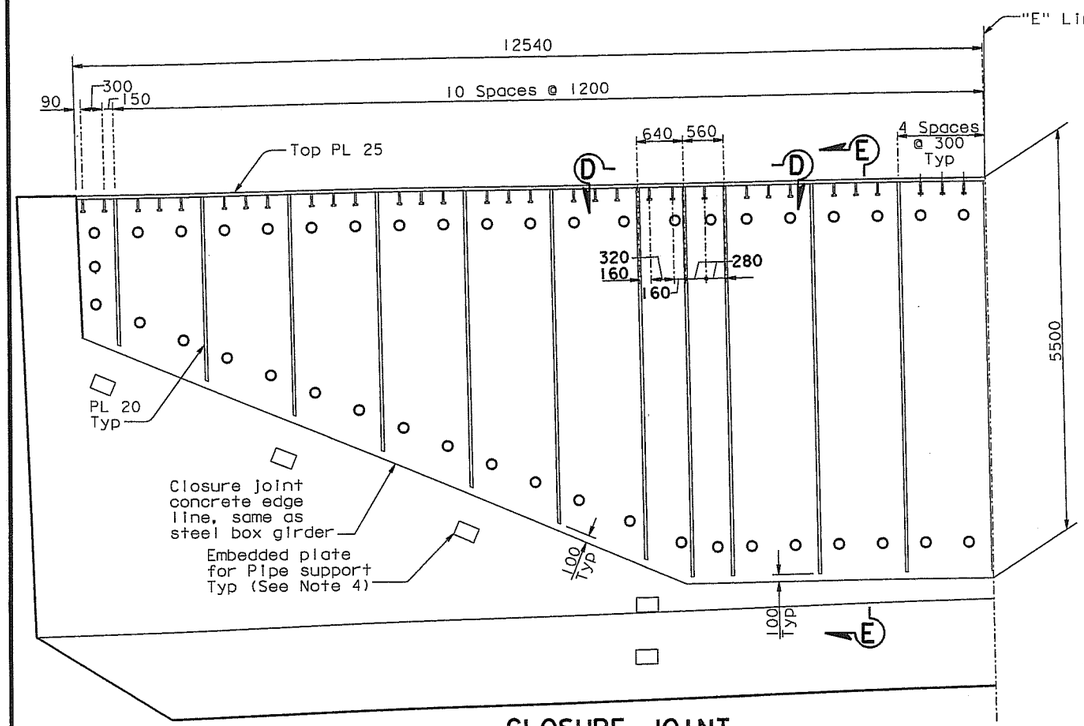

CLOSURE JOINT

(Closure joint reinforcement not shown for clarity)

1:40

FOR REVISIONS ONLY

MARK	DATE	DESCRIPTIONS	BY	CH'D	CCO#
		REVISIONS			
0	07/21/06	GENERAL REVISIONS	JD	AS	23

CONTRACT CHANGE ORDER NO. 23

SHEET 73 OF 102

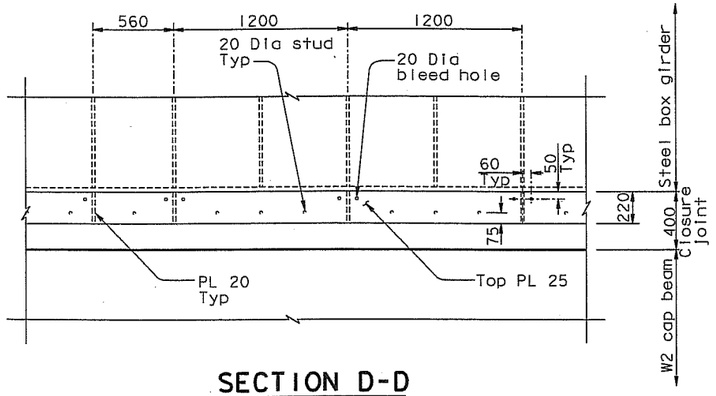

SECTION D-D

(Closure joint reinforcement not shown for clarity)

1:20

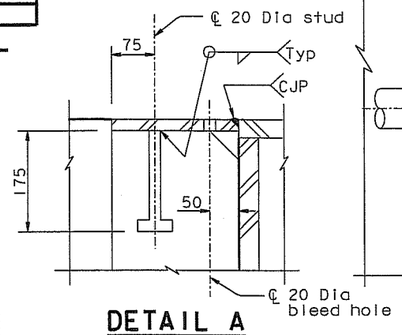

DETAIL A

1:5

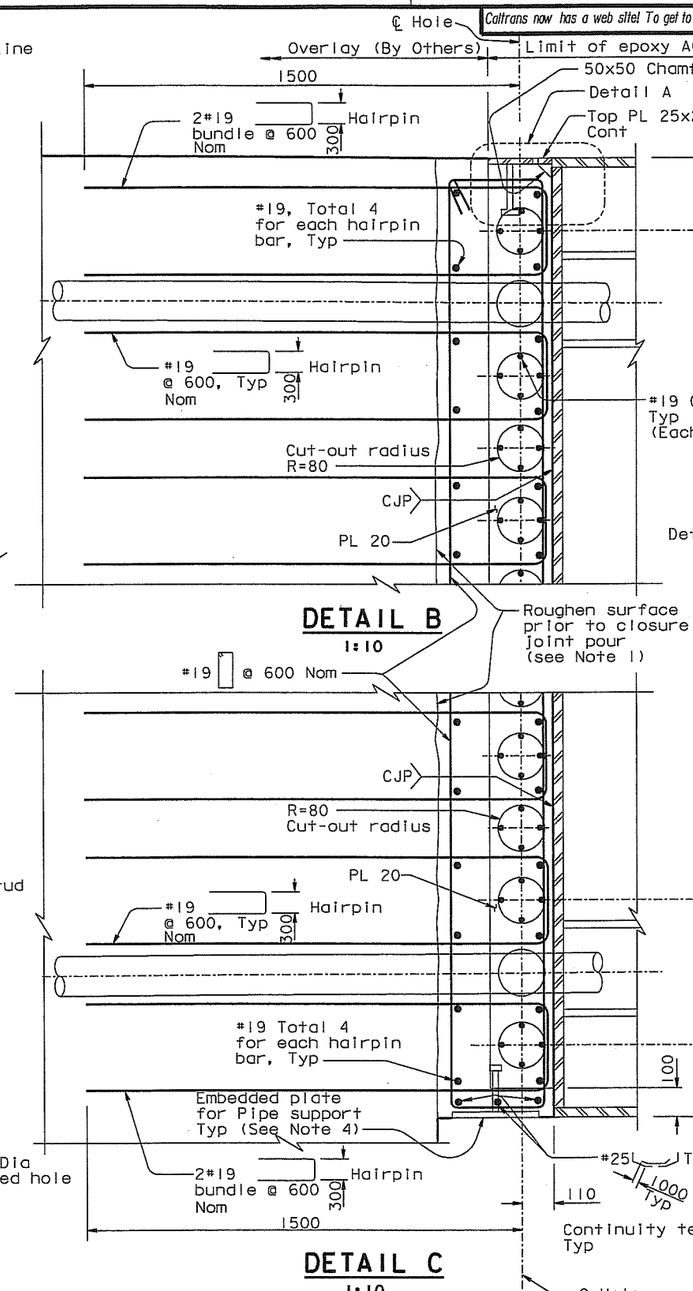

DETAIL B

1:10

DETAIL C

1:10

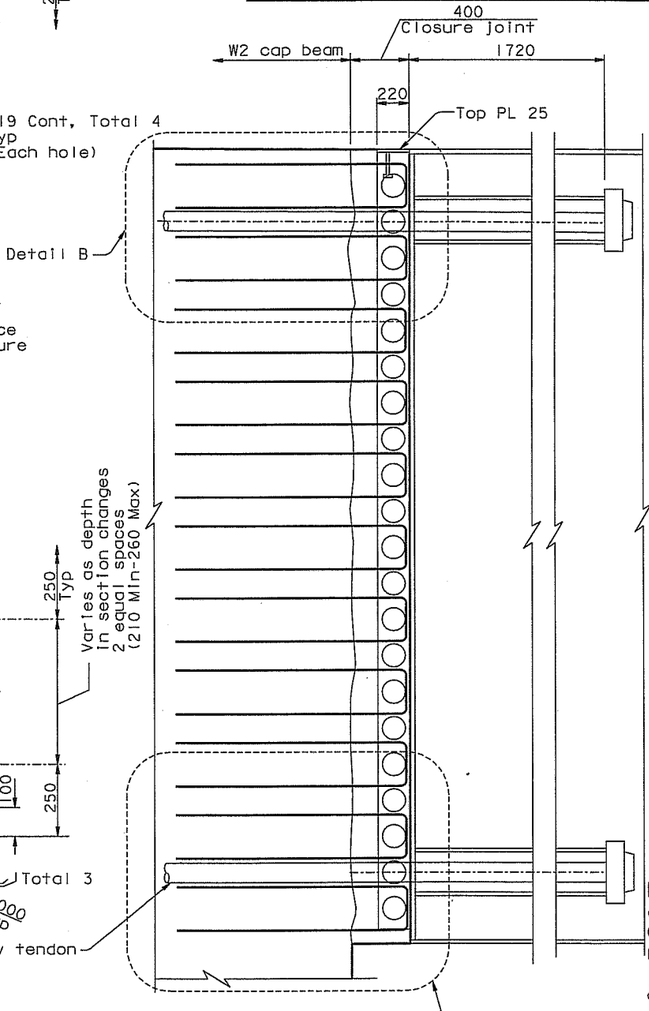

SECTION E-E

1:20

NOTES:

1. Roughen the existing W2 Cap Beam concrete surface to a minimum of 5 mm amplitude prior to pouring the closure joint.
2. Reinforcement spacing shall be adjusted to avoid PT ducts if required.
3. All plate shall be ASTM A709M HPS 485W, unless specified otherwise.
4. For pipe support locations and details, see "Road Plans".

ALL DIMENSIONS ARE IN MILLIMETERS UNLESS OTHERWISE SHOWN

Caltrans now has a web site! To get to the web site, go to: http://www.dot.ca.gov

DIST.	COUNTY	ROUTE	KILOMETER POST TOTAL PROJECT	SHEET No.	TOTAL SHEETS
04	SF	80	13.2/13.9	497S25	1204

REGISTERED ENGINEER - CIVIL

12-6-04

PLANS APPROVAL DATE

The State of California or its officers or agents shall not be responsible for the accuracy or completeness of electronic copies of this plan sheet.

T.Y. LIN / MOFFATT & NICHOL
825 BATTERY STREET
SAN FRANCISCO, CA 94111

SAN FRANCISCO OAKLAND BAY BRIDGE
EAST SPAN SEISMIC SAFETY PROJECT
SELF-ANCHORED SUSPENSION BRIDGE
(SUPERSTRUCTURE & TOWER)

W2 CAP BEAM REINFORCEMENT DETAILS NO. 49

DESIGN	BY J. Sun	CHECKED M. Chen	PREPARED FOR THE STATE OF CALIFORNIA DEPARTMENT OF TRANSPORTATION
DETAILS	BY J. Duxbury	CHECKED M. Chen	
QUANTITIES	BY S. Shi	CHECKED D. Harrison	

R. Valizadeh/V. Toan/Y.L./W.L./F.C.
DESIGN OVERSIGHT
SIGN OFF DATE 07/21/06

R. Manzanarez
PROJECT ENGINEER

BRIDGE NO. 34-0006L/R
KILOMETER POST 13.2/13.9

CU 04
EA 0120F1

DISREGARD PRINTS BEARING EARLIER REVISION DATES

REVISION DATES (PRELIMINARY STAGE ONLY): 07/21/06

SHEET 080S25 OF

Rev. Date: 5-18-98

ORIGINAL SCALE IN MILLIMETERS FOR REDUCED PLANS 0 10 20 30 40 50 60 70 80 90 100

FILE => I:\bb\04-012001\sas\contract plans and cco\cco\cco#23\aecap4Br-s.dgn

100 % PS&E

TIME PLOTTED => 10:37:04

DATE PLOTTED => 10 MAY 2007

USERNAME => vignatovs

ITEM: LAYER 1 LONGITUDINAL BARS

Sht. #	Bundle	Bar Mark	Type	Location	No. Bars
58R1		25L1L01	L3	Top Skin	53
58R1		25L1L02	L3	Top Skin	76
58R1		25L1L03	L4	Top Skin	12
58R1		25L1L04	L4	Top Skin	66
58R1		25L1L05	B11	Top Skin	14
58R1		25L1L06	B11	Top Skin	6
58R1		25L1L07	L4	Top Skin	6
58R1		25L1L08	B3	Top Skin	8
58R1		25L1L09	B11	Top Skin	32
58R1		25L1L10	B11	Top Skin	6

ITEM: LAYER 1 TRANSVERSE BARS

Sht. #	Bundle	Bar Mark	Type	Location	No. Bars
58R1	X	43L1T01	L5	Top Trans	68
58R1	X	43L1T02	L5	Top Trans	46
58R1	X	43L1T03	L5	Top Trans	12
58R1	X	43L1T04	L5	Top Trans	24
58R1	X	43L1T05	L5	Top Trans	10
58R1	X	43L1T06	L5	Top Trans	6
58R1	X	43L1T07	L5	Top Trans	24
58R1	X	43L1T08	STR	Top Trans	116
58R1	X	43L1T09	STR	Top Trans	40
58R1	X	43L1T10	STR	Top Trans	18

ITEM: LAYER 2 LONGITUDINAL BARS

Sht. #	Bundle	Bar Mark	Type	Location	No. Bars
					0
					0
					0
					0

ITEM: LAYER 2 TRANSVERSE BARS

Sht. #	Bundle	Bar Mark	Type	Location	No. Bars
60R1		43L2T01	STR	Top Trans	72
60R1		43L2T02	STR	Top Trans	18
60R1	X	43L2T04	STR	Top Trans	8

ITEM: LAYER 3 LONGITUDINAL BARS

Sht. #	Bundle	Bar Mark	Type	Location	No. Bars
					0
					0
					0

ITEM: LAYER 3 TRANSVERSE BARS

Sht. #	Bundle	Bar Mark	Type	Location	No. Bars
60R1	X	43L3T01	STR	Top Trans	40
60R1	X	43L3T02	STR	Top Trans	36

ITEM: LAYER 4 LONGITUDINAL BARS

Sht. #	Bundle	Bar Mark	Type	Location	No. Bars
					0
					0
					0
					0
					0

ITEM: LAYER 4 TRANSVERSE BARS

Sht. #	Bundle	Bar Mark	Type	Location	No. Bars
60R1	X	43L4T01	STR	Top Trans	12
69R1	X	43L4T02	STR	Top Trans	36
60R1	X	43L4T03	STR	Top Trans	8
60R1	X	43L4T04	STR	Top Trans	4
60R1	X	43L4T05	STR	Top Trans	8

ITEM: LAYER 5 LONGITUDINAL BARS

Sht. #	Bundle	Bar Mark	Type	Location	No. Bars
61R1		25L5L01	L3	Top Long	84
61R1		25L5L02	L3	Top Long	2
61R1		25L5L03	L3	Top Long	2
61R1		25L5L04	L3	Top Long	2
61R1		25L5L05	L3	Top Long	2
61R1		25L5L06	L3	Top Long	2
61R1		25L5L07	L3	Top Long	2
61R1		29L01	STR	Top Long	6

ITEM: LAYER 5 TRANSVERSE BARS

Sht. #	Bundle	Bar Mark	Type	Location	No. Bars
61R1		43L5T01	STR	Top Trans	29
61R1		43L5T02	STR	Top Trans	64
61R1		43L5T03	STR	Top Trans	1
61R1		43L5T04	STR	Top Trans	1
61R1		43L5T05	STR	Top Trans	1
61R1		43L5T06	STR	Top Trans	2
61R1		43L5T08	STR	Top Trans	2
61R1		43L5T10	STR	Top Trans	2

ITEM: LAYER B1 LONGITUDINAL BARS

Sht. #	Bundle	Bar Mark	Type	Location	No. Bars
65R1		25B1L01	L12	Bot Long	15
65R1		25B1L02	L13	Bot Long	82

ITEM: LAYER B1 TRANSVERSE BARS

Sht. #	Bundle	Bar Mark	Type	Location	No. Bars
66R1		43B1T01	STR	Bot Trans	25
66R1		43B1T02	STR	Bot Trans	11
66R1		43B1T03	STR	Bot Trans	14
66R1		43B1T04	STR	Bot Trans	16
66R1		43B1T05	STR	Bot Trans	24
66R1		43B1T06	STR	Bot Trans	28
66R1		43B1T07	STR	Bot Trans	40
66R1		43HB1T01	T3	Bot Trans	9
66R1		43HB1T03	T1	Bot Trans	18
66R1		43HB1T04	T2	Bot Trans	8

ITEM: LAYER B2 LONGITUDINAL BARS

Sht. #	Bundle	Bar Mark	Type	Location	No. Bars

ITEM: LAYER B2 TRANSVERSE BARS

Sht. #	Bundle	Bar Mark	Type	Location	No. Bars
67R1		43B2T01	STR	Bot Trans	28
67R1		43B2T02	STR	Bot Trans	24
67R1		43B2T03	STR	Bot Trans	3

Barlist schedules are provided for general guidance, and shall not be used as a basis for quantity estimation. Barlist schedules shall not be for fabrication purposes. Final weights, length, and geometries shall be the responsibility of the Contractor.

BAR BENDING DIAGRAMS

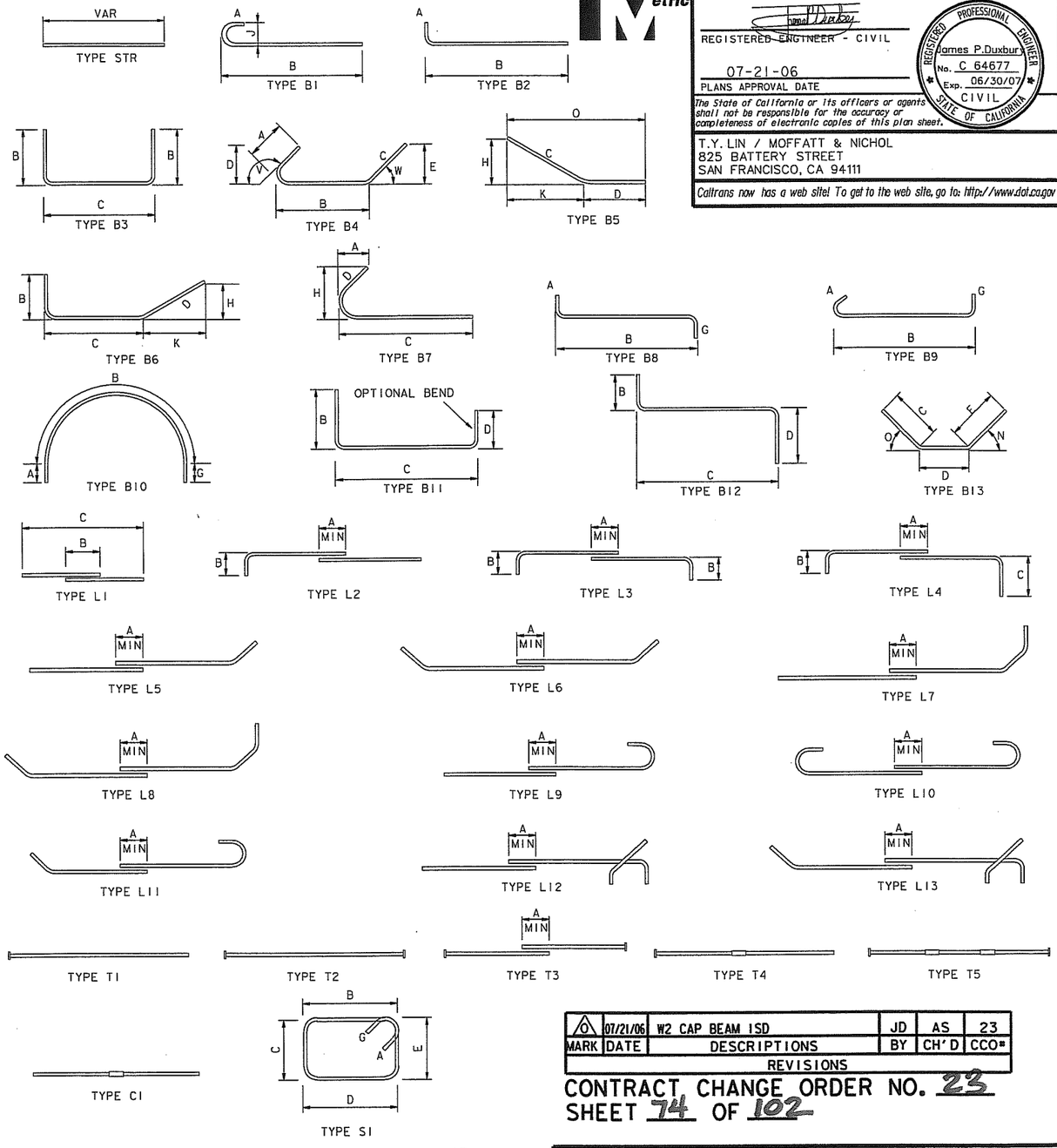

ALL DIMENSIONS ARE IN MILLIMETERS UNLESS OTHERWISE SHOWN

DIST.	COUNTY	ROUTE	KILOMETER POST TOTAL PROJECT	SHEET NO.	TOTAL SHEETS
04	SF	80	13.2/13.9	497S26	1204

REGISTERED ENGINEER - CIVIL

07-21-06
PLANS APPROVAL DATE

PROFESSIONAL ENGINEER — James P. Duxbury — No. C 64677 — Exp. 06/30/07 — CIVIL — STATE OF CALIFORNIA

The State of California or its officers or agents shall not be responsible for the accuracy or completeness of electronic copies of this plan sheet.

T.Y. LIN / MOFFATT & NICHOL
825 BATTERY STREET
SAN FRANCISCO, CA 94111

Caltrans now has a web site! To get to the web site, go to: http://www.dot.ca.gov

MARK	DATE	REVISIONS	BY	CH'D	CCO#
0	07/21/06	W2 CAP BEAM ISD	JD	AS	23

CONTRACT CHANGE ORDER NO. 23
SHEET 74 OF 102

R. Valizadeh/V. Toan/Y.L./W.L./F.C.
DESIGN OVERSIGHT
SIGN OFF DATE 07/21/06

	BY	CHECKED
DESIGN	J. Duxbury	A. Sanjines
DETAILS	J. Duxbury	A. Sanjines
QUANTITIES	N. Vo	J. Duxbury

PREPARED FOR THE STATE OF CALIFORNIA DEPARTMENT OF TRANSPORTATION

R. Manzanarez
PROJECT ENGINEER

BRIDGE NO. 34-0006L/R
KILOMETER POST 13.2/13.9

SAN FRANCISCO OAKLAND BAY BRIDGE
EAST SPAN SEISMIC SAFETY PROJECT
SELF-ANCHORED SUSPENSION BRIDGE
(SUPERSTRUCTURE & TOWER)

W2 CAP BEAM REINFORCEMENT DETAILS NO. 50

Rev. Date: 5-18-98

ORIGINAL SCALE IN MILLIMETERS FOR REDUCED PLANS 0 10 20 30 40 50 60 70 80 90 100

CU 04
EA 0120F1

DISREGARD PRINTS BEARING EARLIER REVISION DATES

REVISION DATES (PRELIMINARY STAGE ONLY) 07/21/06

SHEET 080S26 OF

FILE => I:\bb\04-012001\sas\contract plans and cco\cco\cco#23\aecap49r-s.dgn

USERNAME => vignatovi DATE PLOTTED => 10 MAY 2007 TIME PLOTTED => 10:38:16

ITEM: LAYER B3 LONGITUDINAL BARS

Sht. #	Bundle	Bar Mark	Type	Location	No. Bars

ITEM: LAYER B4 LONGITUDINAL BARS

Sht. #	Bundle	Bar Mark	Type	Location	No. Bars
70R1/80S10		25B4L01	L8	Bot Long	196
70R1		25B4L02	B5	Bot Long	22
70R1		25B4L03	STR	Bot Long	8
70R1		25B4L04	STR	Bot Long	8
70R1		25B4L05	B5	Bot Long	22
70R1/80S10		25B4L06	L7	Bot Long	15

ITEM: WEST FACE LONGITUDINAL BARS

Sht. #	Bundle	Bar Mark	Type	Location	No. Bars
80S10		25L2L01	B2	West Face	48
80S10		25L2L02	B2	West Face	8
80S10		25L2L03	STR	West Face	32
80S10		25L4L02	B2	West Face	12
80S10		25L4L03	B3	West Face	36
80S10		25L4L04	B2	West Face	60
80S10		25L4L05	STR	West Face	48
80S10		25V02	STR	West Face	73
80S10		25V03	B4	West Face	15
80S10		25V04	B4	West Face	97
80S10		25V05	STR	West Face	42
80S10		25V06	B6	West Face	36
80S10		25V07	B4	West Face	82
80S10		25V08	B4	West Face	60

ITEM: EAST FACE OUTER LAYER LONGITUDINAL BARS

Sht. #	Bundle	Bar Mark	Type	Location	No. Bars
80S11		25V01	STR	East Face	227

ITEM: LAYER B3 TRANSVERSE BARS

Sht. #	Bundle	Bar Mark	Type	Location	No. Bars
68R1		43B3T01	STR	Bot Trans	28
68R1		43B3T02	STR	Bot Trans	5

ITEM: LAYER B4 TRANSVERSE BARS

Sht. #	Bundle	Bar Mark	Type	Location	No. Bars
69R1	X	43B4T01	STR	Bot Trans	70
69R1	X	43B4T02	STR	Bot Trans	44
69R1	X	43B4T03	STR	Bot Trans	28
69R1		43B4T04	STR	Bot Trans	2
69R1	X	43B4T05	STR	Bot Trans	40
69R1	X	43B4T06	STR	Bot Trans	56
69R1	X	43B4T07	STR	Bot Trans	80
69R1	X	43HB4T01	T3	Bot Trans	18
69R1	X	43HB4T03	T1	Bot Trans	36
69R1	X	43HB4T04	T2	Bot Trans	16

ITEM: WEST FACE TRANSVERSE BARS

Sht. #	Bundle	Bar Mark	Type	Location	No. Bars
75R1		36L2T01	STR	West Face	1
75R1		36L4T01	STR	West Face	1
75R1		25L5T02	B2	West Face	1
75R1		25L5T03	B2	West Face	1
75R1		36L5T04	STR	West Face	1
75R1		25L6T01	B2	West Face	1
75R1		25L6T02	B2	West Face	1
75R1		25L6T03	B2	West Face	1
75R1		36L6T04	STR	West Face	1
75R1		25L6T05	B2	West Face	1
75R1		25L6T06	B2	West Face	1
75R1		25L6T07	B2	West Face	1
75R1		25L7T01	B2	West Face	1
75R1		25L7T02	B2	West Face	1
75R1		25L7T03	B2	West Face	1
75R1		36L7T04	STR	West Face	1
75R1		25L7T05	B2	West Face	1
75R1		25L7T06	B2	West Face	1
75R1		25L7T07	B2	West Face	1
75R1		25L8T01	B2	West Face	1
75R1		25L8T02	B2	West Face	1
75R1		25L8T03	B2	West Face	1
75R1		36L8T04	STR	West Face	1
75R1		25L8T05	B2	West Face	1
75R1		25L8T06	B2	West Face	1
75R1		25L8T07	B2	West Face	1
75R1		25L9T02	B2	West Face	1
75R1		25L9T03	B2	West Face	1
75R1		36L9T04	STR	West Face	1
75R1		36L9T05	B2	West Face	1
75R1		36L9T06	B2	West Face	1
75R1		25L10T02	B2	West Face	1
75R1		25L10T03	B2	West Face	1
75R1		36L10T04	STR	West Face	1
75R1		25L10T05	B2	West Face	1
75R1		25L10T06	B2	West Face	1
75R1		25L11T01	B2	West Face	1
75R1		25L11T02	B2	West Face	1
75R1		36L11T03	STR	West Face	1
75R1		25L11T05	B2	West Face	1
75R1		25L11T06	B2	West Face	1
75R1	X	36L12T01	STR	West Face	2
75R1	X	36L12T02	STR	West Face	2
75R1	X	36L13T01	STR	West Face	2
75R1	X	36L13T02	STR	West Face	2
75R1		25L13T03	B2	West Face	1
75R1	X	36L14T01	STR	West Face	2
75R1	X	36L14T02	STR	West Face	2
75R1	X	36L15T01	STR	West Face	2
75R1	X	36L15T02	STR	West Face	2
75R1	X	36L16T01	STR	West Face	2
75R1	X	36L16T02	STR	West Face	2

ITEM: WEST FACE INTERIOR TRANSVERSE BARS

Sht. #	Bundle	Bar Mark	Type	Location	No. Bars
76R1		36L4T21	STR	West Face	1
76R1		36L5T24	STR	West Face	1
76R1	X	36L6T23	STR	West Face	2
76R1	X	36L6T24	STR	West Face	2
76R1/77R1	X	36L6T33	STR	West Face	2
77R1	X	36L6T35	STR	West Face	2
76R1	X	36L7T23	STR	West Face	2
76R1	X	36L7T24	STR	West Face	2
76R1	X	36L7T25	STR	West Face	2
76R1/77R1	X	36L7T33	STR	West Face	2
77R1	X	36L7T35	STR	West Face	2
76R1	X	36L8T23	STR	West Face	2
76R1	X	36L8T24	STR	West Face	2
76R1	X	36L8T25	STR	West Face	2
76R1/77R1	X	36L8T33	STR	West Face	2
77R1	X	36L8T35	STR	West Face	2
76R1		36L9T23	STR	West Face	1
76R1		36L9T24	STR	West Face	1
76R1	X	36L9T25	STR	West Face	2
76R1	X	36L10T23	STR	West Face	2
76R1	X	36L10T24	STR	West Face	2
76R1/77R1	X	36L10T33	STR	West Face	2
77R1	X	36L10T35	STR	West Face	2
76R1		36L11T22	STR	West Face	1
76R1		36L11T23	STR	West Face	1
76R1		36L11T25	STR	West Face	1
76R1		36L12T21	STR	West Face	1
76R1		36L13T21	STR	West Face	1
76R1		36L14T21	STR	West Face	1
76R1		36L15T21	STR	West Face	1
76R1		36L12T22	STR	West Face	1
76R1		36L13T22	STR	West Face	1
76R1		36L14T22	STR	West Face	1
76R1		36L15T22	STR	West Face	1
80S16		25V09	B1	West Face	15
80S17		25V10	L11*	West Face	82

ITEM: EAST FACE INTERIOR TRANSVERSE BARS

Sht. #	Bundle	Bar Mark	Type	Location	No. Bars
80R1		36L4T81	STR	East Face	1
80R1		36L5T81	STR	East Face	1
80R1		36L6T81	STR	East Face	1
80R1		36L7T81	STR	East Face	1
80R1		36L8T81	STR	East Face	1
80R1		36L9T81	STR	East Face	1
80R1		36L10T81	STR	East Face	1
80R1		36L11T81	STR	East Face	1
80R1		36L12T81	STR	East Face	1
80R1		36L13T81	STR	East Face	1
80S17		25V11	L9	East Face	90

ITEM: EAST FACE EXTERIOR TRANSVERSE BARS

Sht. #	Bundle	Bar Mark	Type	Location	No. Bars
79R1		36L4T91	STR	East Face	1
79R1		36L5T91	STR	East Face	1
79R1		36L6T91	STR	East Face	1
79R1		36L7T90	STR	East Face	1
79R1		36L7T91	STR	East Face	1
79R1		36L8T90	STR	East Face	1
79R1		36L8T91	STR	East Face	1
79R1		36L8T92	STR	East Face	1
79R1		36L9T90	STR	East Face	1
79R1		36L9T91	STR	East Face	1
79R1		36L9T92	STR	East Face	1
79R1		36L10T91	STR	East Face	1
79R1		36L10T92	STR	East Face	1
79R1		36L11T91	STR	East Face	1
79R1		36L11T92	STR	East Face	1
79R1		36L12T90	STR	East Face	1
79R1		36L12T91	STR	East Face	1
79R1		36L13T90	STR	East Face	1
79R1		36L13T91	STR	East Face	1
79R1		36L13T92	STR	East Face	1
79R1		36L14T91	STR	East Face	1

Barlist schedules are provided for general guidance, and shall not be used as a basis for quantity estimation. Barlist schedules shall not be for fabrication purposes. Final weights, length, and geometries shall be the responsibility of the Contractor.

*Bars intersect at an angle. Minimum development beyond.

DIST.	COUNTY	ROUTE	KILOMETER POST TOTAL PROJECT	SHEET NO.	TOTAL SHEETS
04	SF	80	13.2/13.9	497S27	1204

Caltrans Metric

REGISTERED ENGINEER - CIVIL

07-21-06
PLANS APPROVAL DATE

REGISTERED PROFESSIONAL ENGINEER James P.Duxbury No. C 64677 Exp. 06/30/07 CIVIL STATE OF CALIFORNIA

The State of California or its officers or agents shall not be responsible for the accuracy or completeness of electronic copies of this plan sheet.

T.Y. LIN / MOFFATT & NICHOL
825 BATTERY STREET
SAN FRANCISCO, CA 94111

Caltrans now has a web site! To get to the web site, go to: http://www.dot.ca.gov

MARK	DATE	DESCRIPTIONS	BY	CH'D	CCO#
0	07/21/06	W2 CAP BEAM ISD	JD	AS	23

REVISIONS

CONTRACT CHANGE ORDER NO. 23
SHEET 75 OF 102

ALL DIMENSIONS ARE IN MILLIMETERS UNLESS OTHERWISE SHOWN

SAN FRANCISCO OAKLAND BAY BRIDGE
EAST SPAN SEISMIC SAFETY PROJECT
SELF-ANCHORED SUSPENSION BRIDGE
(SUPERSTRUCTURE & TOWER)

W2 CAP BEAM REINFORCEMENT DETAILS NO.51

R. Valizadeh/V. Toan/Y.L./W.L./F.C.
DESIGN OVERSIGHT
SIGN OFF DATE 07/21/06

Rev. Date: 5-18-98

	BY	CHECKED
DESIGN	J. Duxbury	A. Sanjines
DETAILS	J. Duxbury	A. Sanjines
QUANTITIES	N. Vo	J. Duxbury

PREPARED FOR THE STATE OF CALIFORNIA DEPARTMENT OF TRANSPORTATION

R. Manzanarez
PROJECT ENGINEER

BRIDGE NO. 34-0006L/R
KILOMETER POST 13.2/13.9

ORIGINAL SCALE IN MILLIMETERS FOR REDUCED PLANS 0 10 20 30 40 50 60 70 80 90 100

CU 04
EA 0120F1

DISREGARD PRINTS BEARING EARLIER REVISION DATES → 07/21/06

REVISION DATES (PRELIMINARY STAGE ONLY)

SHEET 080S27 OF

FILE => I:\bb\04-012001\sas\contract plans and cco\cco\cco#23\aecap50r-s.dgn

USERNAME => vignatovsi DATE PLOTTED => 10 MAY 2007 TIME PLOTTED => 10:42:30

ITEM: TRANSVERSE DIAPHRAGM TRANSVERSE BARS

Sht. #	Bundle	Bar Mark	Type	Location	No. Bars
80S2/S3		36L4T40	STR	Trans Diaph	2
80S2/S3		36L5T40	STR	Trans Diaph	2
80S2/S3		36L6T40	STR	Trans Diaph	2
80S2/S3		36L7T40	STR	Trans Diaph	4
80S2/S3		36L8T40	STR	Trans Diaph	4
80S2/S3		36L9T40	STR	Trans Diaph	4
80S2/S3		36L10T40	STR	Trans Diaph	4
80S2/S3		36L11T40	STR	Trans Diaph	4
80S2/S3		36L12T40	STR	Trans Diaph	4
80S2/S3		36L13T40	STR	Trans Diaph	8
80S2/S3		36L13T41	STR	Trans Diaph	4
80S2/S3		36L14T40	STR	Trans Diaph	8
80S2/S3		36L14T41	STR	Trans Diaph	4
80S2/S3		36L15T40	STR	Trans Diaph	4
80S2/S3		29HVTD01	T3	Trans Diaph	126
80S2/S3		29HVTD02	T3	Trans Diaph	24
80S2/S3		29HVTD03	T2	Trans Diaph	24
80S2/S3		25VTD01	STR	Trans Diaph	264

ITEM: LONGITUDINAL DIAPHRAGM TRANSVERSE BARS

Sht. #	Bundle	Bar Mark	Type	Location	No. Bars
80S4/S05		25L4L20	L10	Long Diaph	4
80S4/80S05		25L5L20	L10	Long Diaph	4
80S4/S05		25L6L20	L10	Long Diaph	4
80S4/S05		25L7L20	L10	Long Diaph	4
80S4/S05		25L8L20	L10	Long Diaph	4
80S4/S05		25L9L20	L10	Long Diaph	4
80S4/S05		25L10L20	L10	Long Diaph	4
80S4/S05		25L11L20	L9	Long Diaph	4
80S4/S05		25L12L20	L9	Long Diaph	4
80S4/S05		25L13L20	L9	Long Diaph	4
80S4/S05		25L14L20	STR	Long Diaph	4
80S4/S05		25L14L21	B2	Long Diaph	4
80S4/S05		25L15L20	STR	Long Diaph	4
80S4/S05		25L15L21	B2	Long Diaph	4
80S4/S05		25HVLD01	T2	Long Diaph	44
80S4/S05		29HVLD01	T2	Long Diaph	62
80S4/S05		25HVLD02	T2	Long Diaph	12
80S4/S05		29HVLD02	T1	Long Diaph	28

ITEM: INTERIOR LAYER LONGITUDINAL BARS (LAYERS 5-15)

Sht. #	Bundle	Bar Mark	Type	Location	No. Bars
80S16-S19		25L4L11	L10	Int Long	44
80S16-S19		25L4L12	B1	Int Long	6
80S16-S19		25L4L13	B1	Int Long	6
80S16-S19		25L4L14	B1	Int Long	116
80S16-S19		25L5L11	L10	Int Long	44
80S16-S19		25L5L12	B1	Int Long	6
80S16-S19		25L5L13	B1	Int Long	6
80S16-S19		25L5L14	B1	Int Long	116
80S16-S19		25L5L15	B1	Int Long	48
80S16-S19		25L5L16	B1	Int Long	12
80S16-S19		25L5L17	B1	Int Long	12
80S16-S19		25L6L11	L10	Int Long	44
80S16-S19		25L6L12	B1	Int Long	6
80S16-S19		25L6L13	B1	Int Long	6
80S16-S19		25L6L14	B1	Int Long	116
80S16-S19		25L6L15	B1	Int Long	48
80S16-S19		25L6L16	B1	Int Long	12
80S16-S19		25L6L17	B1	Int Long	12
80S16-S19		25L7L11	L10	Int Long	44
80S16-S19		25L7L14	B1	Int Long	116
80S16-S19		25L7L15	B1	Int Long	48
80S16-S19		25L7L16	B1	Int Long	12
80S16-S19		25L7L17	B1	Int Long	12
80S16-S19		25L8L11	L10	Int Long	44
80S16-S19		25L8L14	B1	Int Long	116
80S16-S19		25L8L15	B1	Int Long	48
80S16-S19		25L8L16	B1	Int Long	12
80S16-S19		25L8L17	B1	Int Long	12
80S16-S19		25L9L11	B1	Int Long	44
80S16-S19		25L9L14	B1	Int Long	116
80S16-S19		25L9L15	B1	Int Long	48
80S16-S19		25L9L16	B1	Int Long	12
80S16-S19		25L9L17	B1	Int Long	12
80S16-S19		25L10L11	B1	Int Long	44
80S16-S19		25L10L14	B1	Int Long	116
80S16-S19		25L10L15	B1	Int Long	48
80S16-S19		25L10L16	B1	Int Long	12
80S16-S19		25L10L17	B1	Int Long	12
80S16-S19		25L11L11	B1	Int Long	44
80S16-S19		25L11L14	B1	Int Long	116
80S16-S19		25L11L15	B1	Int Long	48
80S16-S19		25L11L16	B1	Int Long	12
80S16-S19		25L11L17	B1	Int Long	12
80S16-S19		25L12L11	B1	Int Long	44
80S16-S19		25L12L14	B1	Int Long	116
80S16-S19		25L12L15	B1	Int Long	48
80S16-S19		25L12L16	B1	Int Long	12
80S16-S19		25L12L17	B1	Int Long	12
80S16-S19		25L13L11	B1	Int Long	44
80S16-S19		25L13L14	B1	Int Long	116
80S16-S19		25L13L15	B1	Int Long	48
80S16-S19		25L13L16	B1	Int Long	12
80S16-S19		25L13L17	B1	Int Long	12
80S16-S19		25L14L11	L11	Int Long	44
80S16-S19		25L14L14	B2	Int Long	116
80S16-S19		25L14L15	B2	Int Long	48
80S16-S19		25L14L16	B2	Int Long	12
80S16-S19		25L14L17	B2	Int Long	12
80S16-S19		25L15L11	L11	Int Long	44
80S16-S19		25L15L14	B2	Int Long	116
80S16-S19		25L15L15	B2	Int Long	48
80S16-S19		25L14L16	B2	Int Long	12
80S16-S19		25L14L17	B2	Int Long	12

ITEM: LONGITUDINAL DIAPHRAGM AT JACKING FRAME

Sht. #	Bundle	Bar Mark	Type	Location	No. Bars
80S6		25JS01	B3	Jacking Frame	18
80S6		25JS02	B3	Jacking Frame	9
80S6		29HV01	T1	Jacking Frame	36
80S6		29HV02	T2	Jacking Frame	36
80S7		29HV03	T2	Jacking Frame	60
80S7		29HV04	T2	Jacking Frame	16
80S7		29HV05	T2	Jacking Frame	36
80S7		29HV06	T2	Jacking Frame	36
80S7		29HV07	T2	Jacking Frame	48
80S7		29HV08	T2	Jacking Frame	36
80S6		25HT01	T2	Jacking Frame	45
80S6		29HT01	T2	Jacking Frame	42
80S6		29HT02	T5	Jacking Frame	77
80S6		29HT03	T2	Jacking Frame	22
80S6		29JL01	T4	Jacking Frame	8
80S6		29JL02	T4	Jacking Frame	8
80S6		29JL03	T4	Jacking Frame	8
80S6		29JL04	T4	Jacking Frame	8
80S6		29JL05	T4	Jacking Frame	8
80S6		25JS03	S1	Jacking Frame	22
80S6		25JS04	B9	Jacking Frame	44

Caltrans Metric

DIST.	COUNTY	ROUTE	KILOMETER POST TOTAL PROJECT	SHEET NO.	TOTAL SHEETS
04	SF	80	13.2/13.9	497528	1204

REGISTERED ENGINEER - CIVIL

07-21-06
PLANS APPROVAL DATE

PROFESSIONAL ENGINEER — James P. Duxbury — No. C 64677 — Exp. 06/30/07 — CIVIL — STATE OF CALIFORNIA

The State of California or its officers or agents shall not be responsible for the accuracy or completeness of electronic copies of this plan sheet.

T.Y. LIN / MOFFATT & NICHOL
825 BATTERY STREET
SAN FRANCISCO, CA 94111

Caltrans now has a web site! To get to the web site, go to: http://www.dot.ca.gov

MARK	DATE	REVISIONS	BY	CH'D	CCO#
0	07/21/06	W2 CAP BEAM ISD	JD	AS	23

CONTRACT CHANGE ORDER NO. 23
SHEET 76 OF 102

Barlist schedules are provided for general guidance, and shall not be used as a basis for quantity estimation. Barlist schedules shall not be for fabrication purposes. Final weights, length, and geometries shall be the responsibility of the Contractor.

ALL DIMENSIONS ARE IN MILLIMETERS UNLESS OTHERWISE SHOWN

R. Valizadeh/V. Toan/Y.L./W.L./F.C.
DESIGN OVERSIGHT
SIGN OFF DATE 07/21/06

	BY	CHECKED
DESIGN	J. Duxbury	A. Sanjines
DETAILS	J. Duxbury	A. Sanjines
QUANTITIES	N. Vo	J. Duxbury

PREPARED FOR THE STATE OF CALIFORNIA DEPARTMENT OF TRANSPORTATION

R. Manzanarez
PROJECT ENGINEER

BRIDGE NO. 34-0006L/R
KILOMETER POST 13.2/13.9

CU 04
EA 0120F1

SAN FRANCISCO OAKLAND BAY BRIDGE
EAST SPAN SEISMIC SAFETY PROJECT
SELF-ANCHORED SUSPENSION BRIDGE
(SUPERSTRUCTURE & TOWER)

W2 CAP BEAM REINFORCEMENT DETAILS NO. 52

Rev. Date: 5-18-98

ORIGINAL SCALE IN MILLIMETERS FOR REDUCED PLANS 0 10 20 30 40 50 60 70 80 90 100

DISREGARD PRINTS BEARING EARLIER REVISION DATES

REVISION DATES (PRELIMINARY STAGE ONLY): 07/21/06

SHEET 080528 OF

FILE => I:\bb\04-0120I\sas\contract plans and cco\cco\cco#23\asecap51r-s.dgn

USERNAME => vtgnatovs PLOTTED => 10 MAY 2007 TIME PLOTTED => 10:43:20

Caltrans now has a web site! To get to the web site, go to: http://www.dot.ca.gov

DIST.	COUNTY	ROUTE	KILOMETER POST TOTAL PROJECT	SHEET NO.	TOTAL SHEETS
04	SF	80	13.2/13.9	498R1	1204

REGISTERED ENGINEER - CIVIL

12-6-04
PLANS APPROVAL DATE

REGISTERED PROFESSIONAL ENGINEER — John Sun — No. C 54648 — Exp. 12/31/05 — CIVIL — STATE OF CALIFORNIA

The State of California or its officers or agents shall not be responsible for the accuracy or completeness of electronic copies of this plan sheet.

T.Y. LIN / MOFFATT & NICHOL
825 BATTERY STREET
SAN FRANCISCO, CA 94111

Caltrans Metric

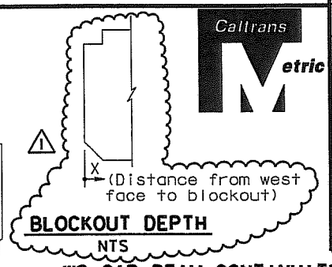

BLOCKOUT DEPTH
NTS

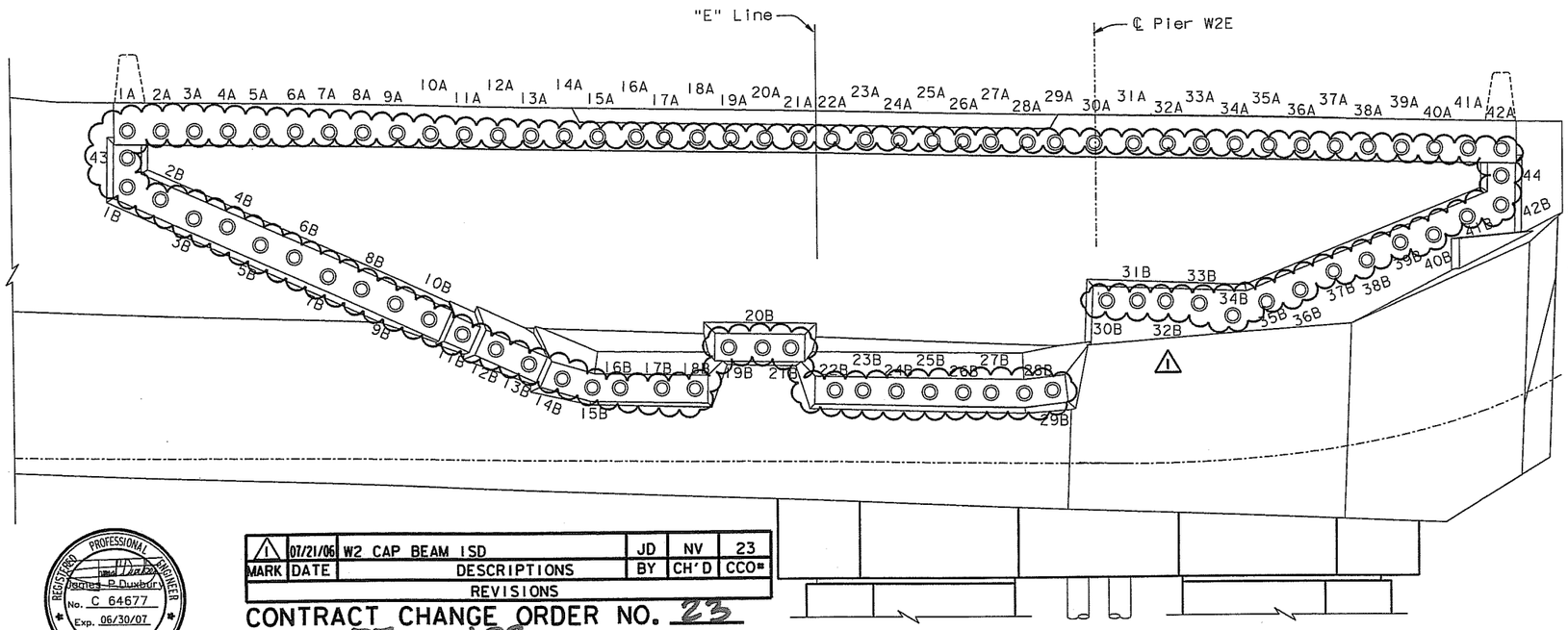

ELEVATION (W2 cap beam continuity PT tendons) (Hinge K not shown for clarity) ⚠1
1:50

W2 CAP BEAM CONTINUITY PT TENDON BLOCKOUT TABLE ⚠1

"E" Line						"W" Line					
PT	Detail	X	PT	Detail	X	PT	Detail	X	PT	Detail	X
1A	A		1B	A		1A	A		1B	A	
2A	C		2B	B		2A	C		2B	B	
3A	C		3B	B		3A	C		3B	B	
4A	C		4B	B		4A	C		4B	B	
5A	C		5B	B	200	5A	C		5B	B	200
6A	C		6B	B		6A	C		6B	B	
7A	C		7B	B		7A	C		7B	B	
8A	C		8B	B		8A	C		8B	B	
9A	C		9B	B		9A	C		9B	B	
10A	C		10B	B		10A	C		10B	B	
11A	C		11B	D	350	11A	C		11B	B	
12A	C		12B	D	550	12A	C		12B	B	
13A	C		13B	D		13A	C		13B	D	300
14A	C		14B	E		14A	C		14B	D	425
15A	C		15B	E		15A	C		15B	E	
16A	C		16B	E	680	16A	C		16B	E	550
17A	C		17B	E		17A	C		17B	E	
18A	C		18B	E		18A	C		18B	E	
19A	C	1000	19B	F		19A	C		19B	H	
20A	C		20B	F	350	20A	C	1000	20B	H	200
21A	C		21B	F		21A	C		21B	H	
22A	C		22B	E		22A	C		22B	H	
23A	C		23B	E		23A	C		23B	E	
24A	C		24B	E		24A	C		24B	E	
25A	C		25B	E	680	25A	C		25B	E	
26A	C		26B	E		26A	C		26B	E	550
27A	C		27B	E		27A	C		27B	E	
28A	C		28B	E		28A	C		28B	E	
29A	C		29B	E		29A	C		29B	E	
30A	C		30B	G		30A	C		30B	G	
31A	C		31B	G		31A	C		31B	G	
32A	C		32B	G		32A	C		32B	G	
33A	C		33B	G		33A	C		33B	G	
34A	C		34B	G		34A	C		34B	G	
35A	C		35B	G	200	35A	C		35B	G	200
36A	C		36B	G		36A	C		36B	G	
37A	C		37B	G		37A	C		37B	G	
38A	C		38B	G		38A	C		38B	G	
39A	C		39B	G		39A	C		39B	G	
40A	C		40B	G		40A	C		40B	G	
41A	C		41B	G		41A	C		41B	G	
42A	A		42B	A		42A	A		42B	T	
43	A	200				43	A	200			
44	A					44	T				

NOTES:

1. For blockout Details A through D, see "W2 Cap Beam Blockout Details No.3" sheet.
2. For blockout Details E through G, see "W2 Cap Beam Blockout Details No.4" sheet.
3. ⚠1 For blockout Details H and T, see "W2 Cap Beam Blockout Details No.5" sheet.
4. For hinge K details, see "Hinge K Details" sheets.
5. For additional prestressing details, see "Prestressing Notes" sheet.

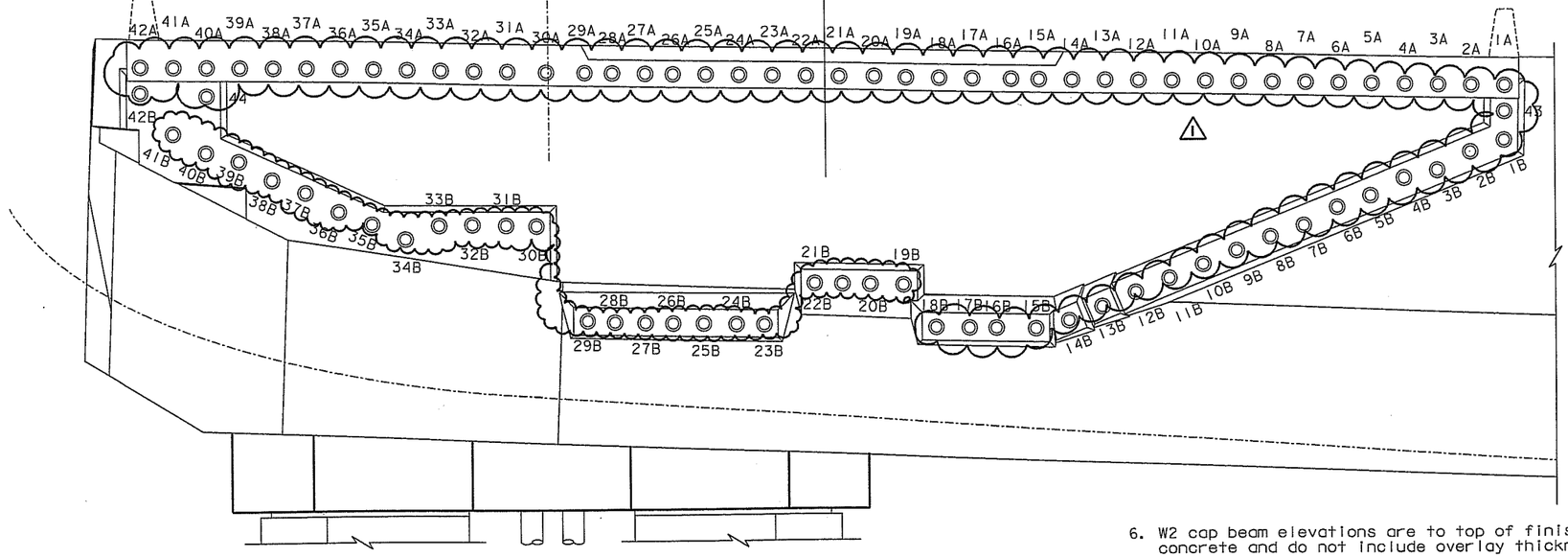

ELEVATION (W2 cap beam continuity PT tendons) (Hinge K not shown for clarity) ⚠1
1:50

6. W2 cap beam elevations are to top of finished concrete and do not include overlay thickness.

ALL DIMENSIONS ARE IN MILLIMETERS UNLESS OTHERWISE SHOWN

MARK	DATE	DESCRIPTIONS	BY	CH'D	CCO#
		REVISIONS			
⚠1	07/21/06	W2 CAP BEAM ISD	JD	NV	23

CONTRACT CHANGE ORDER NO. 23
SHEET 77 OF 102

REGISTERED PROFESSIONAL ENGINEER — James P. Duxbury — No. C 64677 — Exp. 06/30/07 — CIVIL — STATE OF CALIFORNIA

FOR REVISIONS ONLY

R. Valizadeh/V. Toan/Y.L./W.L./F.C.
DESIGN OVERSIGHT
SIGN OFF DATE 07/21/06

	BY	CHECKED
DESIGN	J. Sun	M. Chen
DETAILS	J. Duxbury	M. Chen
QUANTITIES	S. Shi	D. Harrison

PREPARED FOR THE STATE OF CALIFORNIA DEPARTMENT OF TRANSPORTATION

R. Manzanarez
PROJECT ENGINEER

BRIDGE NO.	34-0006L/R
KILOMETER POST	13.2/13.9

SAN FRANCISCO OAKLAND BAY BRIDGE EAST SPAN SEISMIC SAFETY PROJECT
SELF-ANCHORED SUSPENSION BRIDGE (SUPERSTRUCTURE & TOWER)

W2 CAP BEAM BLOCKOUT DETAILS NO. 1

Rev. Date: 5-18-98

ORIGINAL SCALE IN MILLIMETERS FOR REDUCED PLANS 0 10 20 30 40 50 60 70 80 90 100

CU 04
EA 0120F1

DISREGARD PRINTS BEARING EARLIER REVISION DATES

REVISION DATES (PRELIMINARY STAGE ONLY): 05/07/01 | 05/07/02 | 07/07/02 | 12/19/02

SHEET 81R1 OF

FILE => I:\bb\04-012001\sas\contract plans and cco\cco\cco#23\aecbb01.dgn

100 % PS&E

USERNAME => vtignotovs DATE PLOTTED => 10 MAY 2007 TIME PLOTTED => 10:44:33

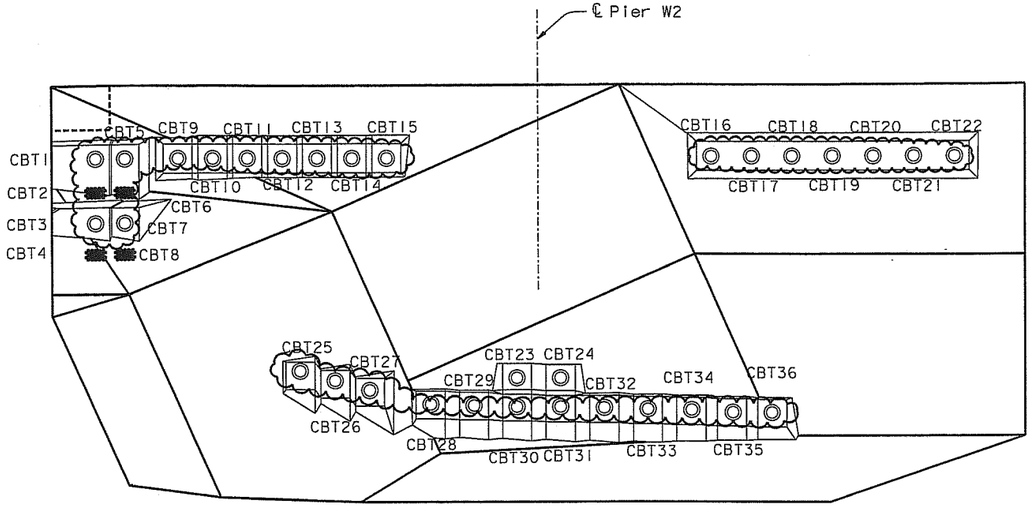

⚠ **ELEVATION** (Cap beam transverse PT tendons)
1:50

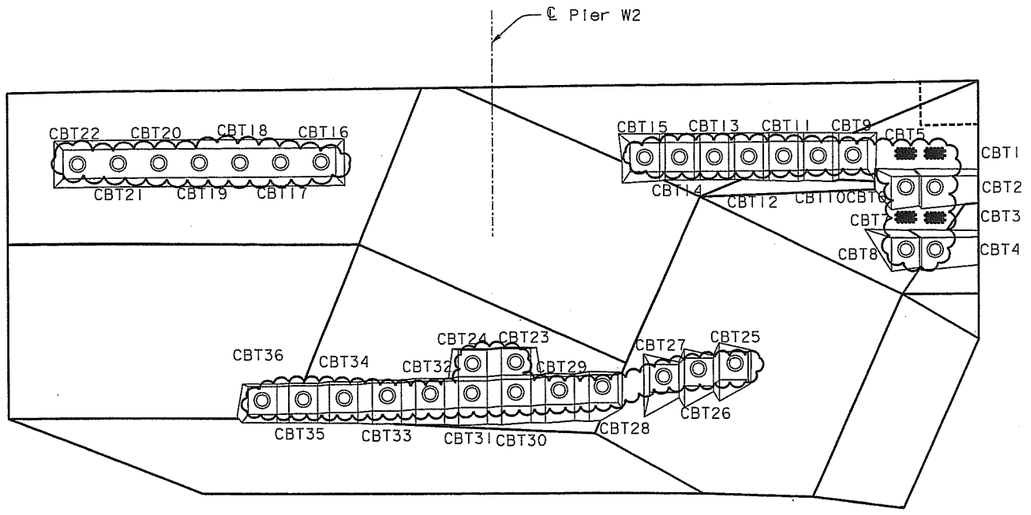

⚠ **ELEVATION** (Cap beam transverse PT tendons)
1:50

CAP BEAM TRANSVERSE PT TENDON BLOCKOUT TABLE

South face		North face	
Tendon	Blockout Detail	Tendon	Blockout Detail
CBT1	R	CBT1	S
CBT2	R	CBT2	S
CBT3	R	CBT3	S
CBT4	R	CBT4	S
CBT5	R	CBT5	S
CBT6	R	CBT6	S
CBT7	R	CBT7	S
CBT8	R	CBT8	S
CBT9	J	CBT9	J
CBT10	J	CBT10	J
CBT11	K	CBT11	K
CBT12	K	CBT12	K
CBT13	K	CBT13	K
CBT14	K	CBT14	K
CBT15	K	CBT15	K
CBT16	L	CBT16	L
CBT17	L	CBT17	L
CBT18	L	CBT18	L
CBT19	L	CBT19	L
CBT20	L	CBT20	L
CBT21	L	CBT21	L
CBT22	L	CBT22	L
CBT23	P	CBT23	P
CBT24	P	CBT24	P
CBT25	M	CBT25	M
CBT26	M	CBT26	M
CBT27	M	CBT27	M
CBT28	N	CBT28	N
CBT29	N	CBT29	N
CBT30	P	CBT30	P
CBT31	P	CBT31	P
CBT32	N	CBT32	N
CBT33	N	CBT33	N
CBT34	N	CBT34	N
CBT35	N	CBT35	N
CBT36	Q	CBT36	Q

NOTES:

1. For Details J through L, see "W2 Cap Beam Blockout Details No.6" sheet.
2. For Details M and N, see "W2 Cap Beam Blockout Details No.7" sheet.
3. For Details P and Q, see "W2 Cap Beam Blockout Details No.8" sheet.
4. For Detail R, see "W2 Cap Beam Blockout Details No.9" sheet.
5. For Detail S, see "W2 Cap Beam Blockout Details No.10" sheet.
6. For additional prestressing details, see "Prestressing Notes" sheet.

DIST.	COUNTY	ROUTE	KILOMETER POST TOTAL PROJECT	SHEET NO.	TOTAL SHEETS
04	SF	80	13.2/13.9	499R1	1204

REGISTERED ENGINEER - CIVIL
12-6-04
PLANS APPROVAL DATE
The State of California or its officers or agents shall not be responsible for the accuracy or completeness of electronic copies of this plan sheet.

REGISTERED PROFESSIONAL ENGINEER — John Sun — No. C 54648 — Exp. 12/31/05 — CIVIL — STATE OF CALIFORNIA

T.Y. LIN / MOFFATT & NICHOL
825 BATTERY STREET
SAN FRANCISCO, CA 94111

Caltrans now has a web site! To get to the web site, go to: http://www.dot.ca.gov

REGISTERED PROFESSIONAL ENGINEER — James P. Duxbury — No. C 64677 — Exp. 06/30/07 — CIVIL — STATE OF CALIFORNIA

FOR REVISIONS ONLY

MARK	DATE	DESCRIPTIONS	BY	CH'D	CCO#
		REVISIONS			
1	07/21/06	W2 CAP BEAM ISD	JD	NV	23

CONTRACT CHANGE ORDER NO. 23
SHEET 78 OF 102

ALL DIMENSIONS ARE IN MILLIMETERS UNLESS OTHERWISE SHOWN

R. Valizadeh/V. Toan/Y.L./W.L./F.C.
DESIGN OVERSIGHT
SIGN OFF DATE 07/21/06

	BY	CHECKED
DESIGN	J. Sun	M. Chen
DETAILS	J. Duxbury	M. Chen
QUANTITIES	S. Shi	D. Harrison

PREPARED FOR THE STATE OF CALIFORNIA DEPARTMENT OF TRANSPORTATION

R. Manzanarez
PROJECT ENGINEER

BRIDGE NO. 34-0006L/R
KILOMETER POST 13.2/13.9

SAN FRANCISCO OAKLAND BAY BRIDGE
EAST SPAN SEISMIC SAFETY PROJECT
SELF-ANCHORED SUSPENSION BRIDGE
(SUPERSTRUCTURE & TOWER)

W2 CAP BEAM BLOCKOUT DETAILS NO. 2

Rev. Date: 5-18-98

ORIGINAL SCALE IN MILLIMETERS FOR REDUCED PLANS 0 10 20 30 40 50 60 70 80 90 100

CU 04
EA 0120F1

DISREGARD PRINTS BEARING EARLIER REVISION DATES → 08/20/99 | 05/31/01 | 01/30/02 | 07/31/02 | 12/19/02

SHEET 82R1 OF

FILE => I:\bb\04-012001\sas\contract plans and cco\cco\cco#23\daecbb02.dgn

100 % PS&E
DATE PLOTTED => 28 MAR 2007 TIME PLOTTED => 08:53:23
USERNAME => visitor

DIST.	COUNTY	ROUTE	KILOMETER POST TOTAL PROJECT	SHEET NO.	TOTAL SHEETS
04	SF	80	13.2/13.9	500R1	1204

REGISTERED ENGINEER - CIVIL

12-6-04
PLANS APPROVAL DATE

REGISTERED PROFESSIONAL ENGINEER — John Sun — No. C 54648 — Exp. 12/31/05 — CIVIL — STATE OF CALIFORNIA

The State of California or its officers or agents shall not be responsible for the accuracy or completeness of electronic copies of this plan sheet.

T.Y. LIN / MOFFATT & NICHOL
825 BATTERY STREET
SAN FRANCISCO, CA 94111

Caltrans now has a web site! To get to the web site, go to: http://www.dot.ca.gov

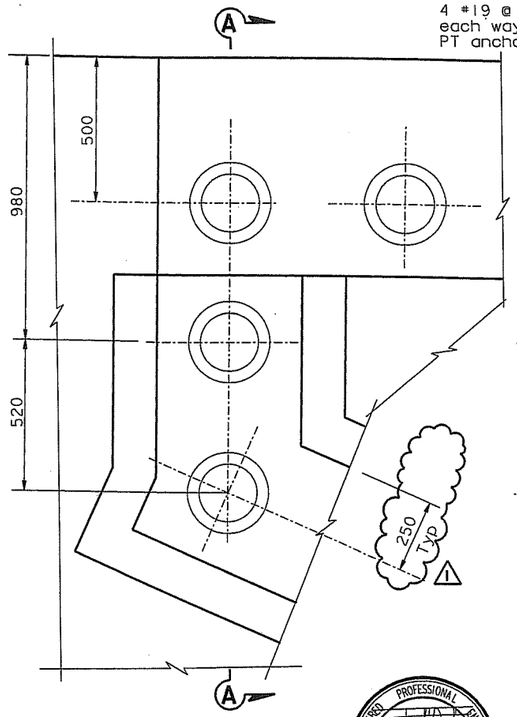

DETAIL A
1:10

REGISTERED PROFESSIONAL ENGINEER — James P. Duxbury — No. C 64677 — Exp. 06/30/07 — CIVIL — STATE OF CALIFORNIA

FOR REVISIONS ONLY

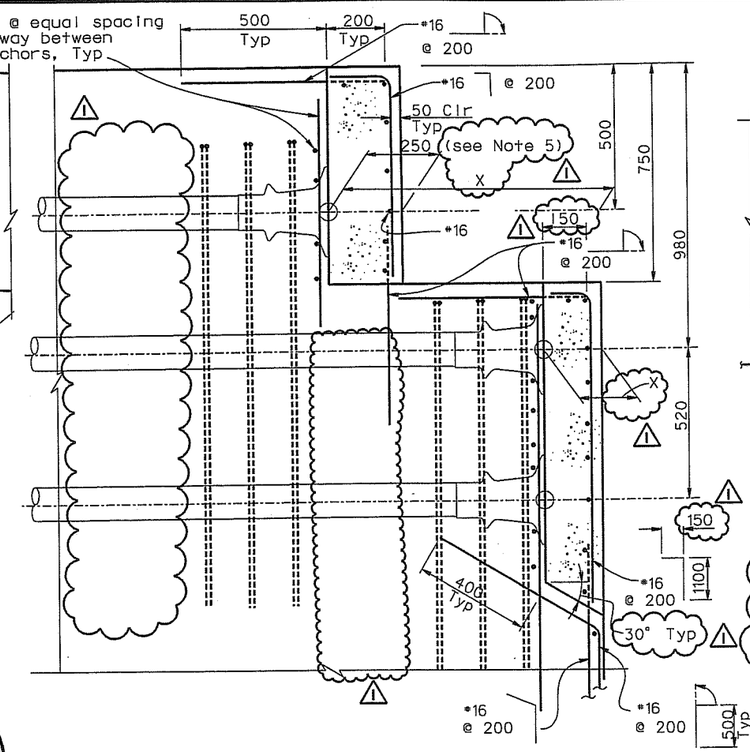

SECTION A-A
1:10

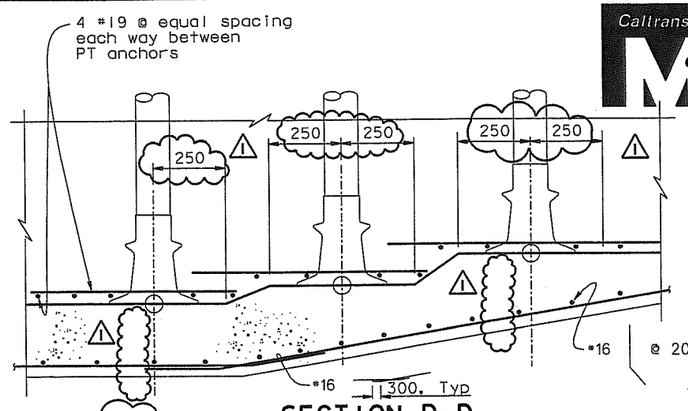

SECTION D-D
1:10

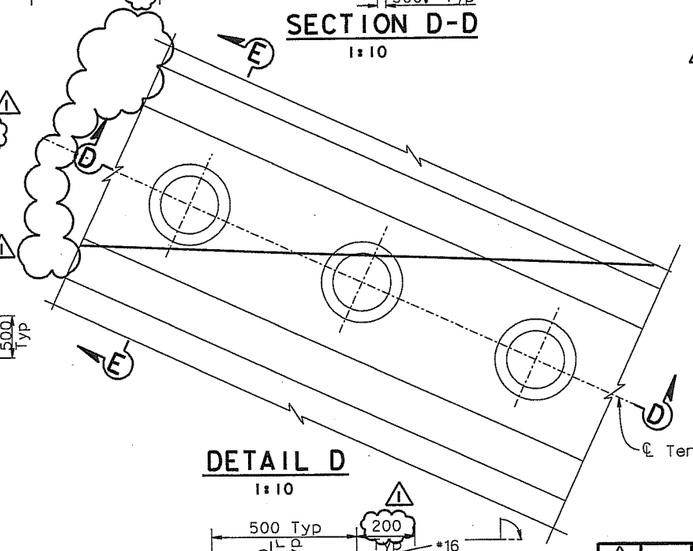

DETAIL D
1:10

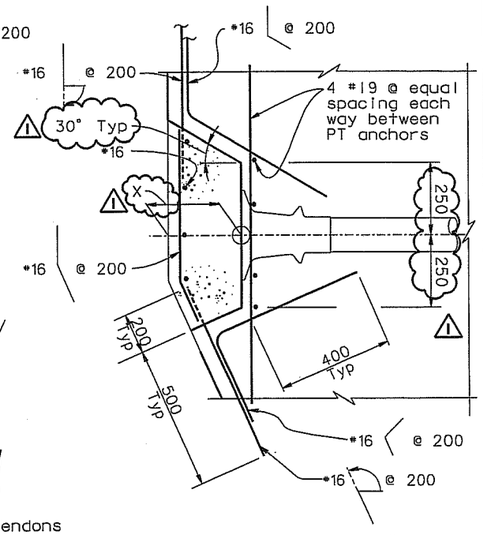

SECTION E-E
1:10

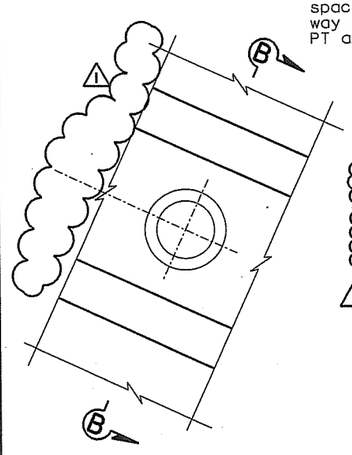

DETAIL B
1:10

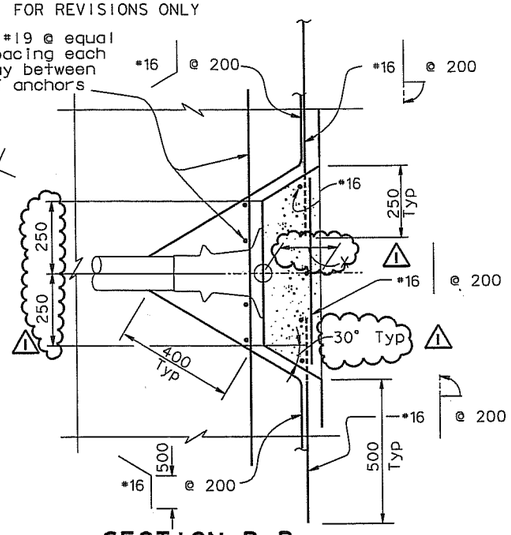

SECTION B-B
1:10

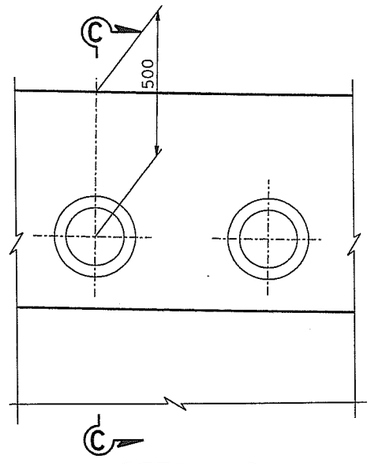

DETAIL C
1:10

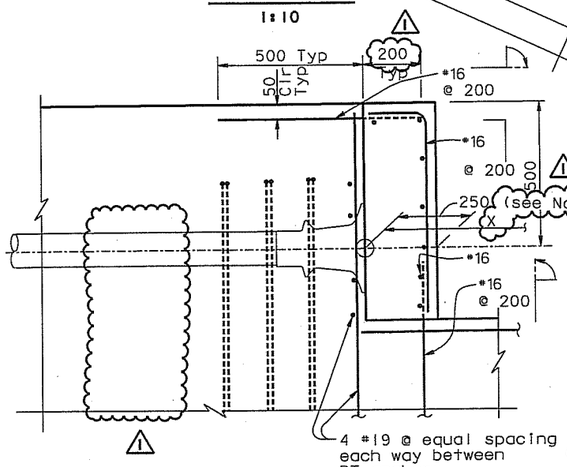

SECTION C-C
1:10

ALL DIMENSIONS ARE IN MILLIMETERS UNLESS OTHERWISE SHOWN

MARK	DATE	REVISIONS DESCRIPTIONS	BY	CH'D	CCO#
1	07/21/06	W2 CAP BEAM ISD	JD	NV	23

CONTRACT CHANGE ORDER NO. 23
SHEET 79 OF 102

NOTES:

1. For additional details, see "W2 Cap Beam Blockout Details No.1" sheet.
2. Cap beam reinforcement not shown for clarity.
3. Local confining spiral reinforcement per tendon anchors shall be provided by PT tendon hardware supplier.
4. Blockouts on the cap beam south face shown, blockouts on the cap beam north face similar.
5. At Contractor's option, concrete blockouts can be placed at the same time as the Hinge K Expansion Joint consolidated concrete.

R. Vallzadeh/V. Toan/Y.L./W.L./F.C.
DESIGN OVERSIGHT
Ryan Vallzadeh / Vong Toan / Y. Lin
SIGN OFF DATE 07/21/06

	BY	CHECKED
DESIGN	J. Sun	M. Chen
DETAILS	J. Duxbury	M. Chen
QUANTITIES	S. Shi	D. Harrison

PREPARED FOR THE STATE OF CALIFORNIA DEPARTMENT OF TRANSPORTATION

R. Manzanarez
PROJECT ENGINEER

BRIDGE NO. 34-0006L/R
KILOMETER POST 13.2/13.9

SAN FRANCISCO OAKLAND BAY BRIDGE
EAST SPAN SEISMIC SAFETY PROJECT
SELF-ANCHORED SUSPENSION BRIDGE
(SUPERSTRUCTURE & TOWER)

W2 CAP BEAM BLOCKOUT DETAILS NO. 3

Rev. Date: 5-18-98

ORIGINAL SCALE IN MILLIMETERS FOR REDUCED PLANS 0 10 20 30 40 50 60 70 80 90 100

CU 04
EA 0120F1

DISREGARD PRINTS BEARING EARLIER REVISION DATES → 08/28/99 | 05/31/01 | 01/08/02 | 07/31/02 | 12/19/02

SHEET 83R1 OF

FILE => I:\bb\04-0120F1\sas\contract plans and cco\cco\cco#23\aecbb03.dgn

USERNAME => vlgnatov

DATE PLOTTED => 10 MAY 2007

TIME PLOTTED => 11:03:04

100 % PS&E

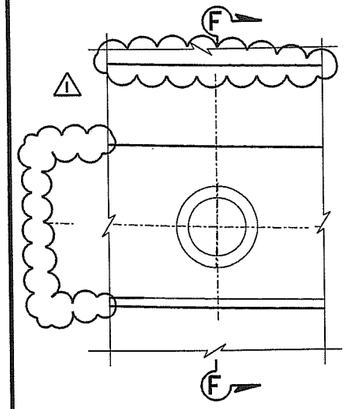

DETAIL E
1:10

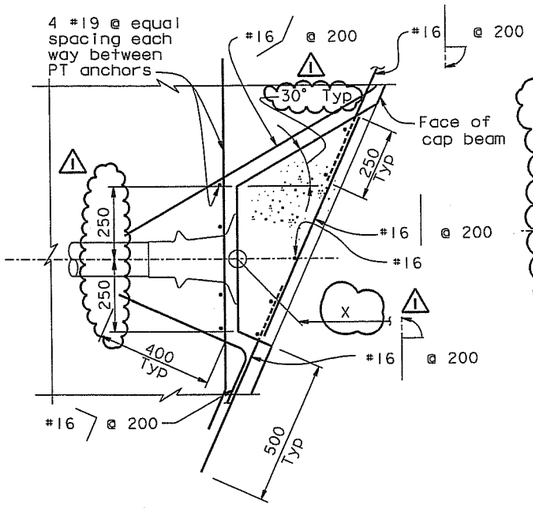

SECTION F-F
1:10

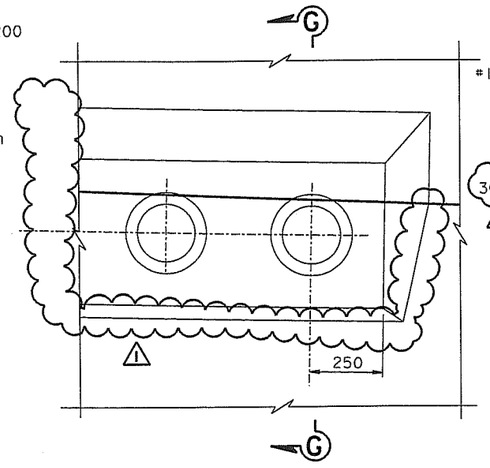

DETAIL F
1:10

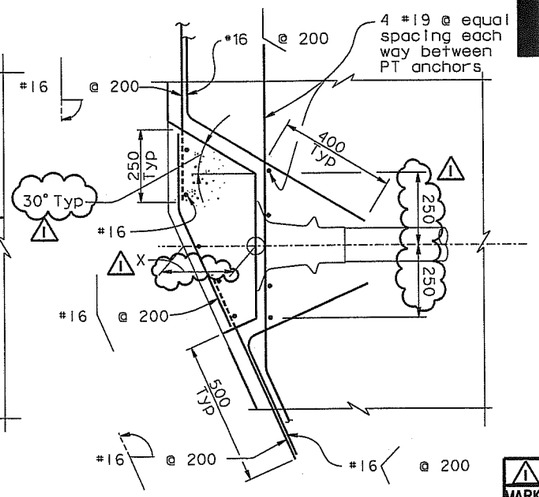

SECTION G-G
1:10

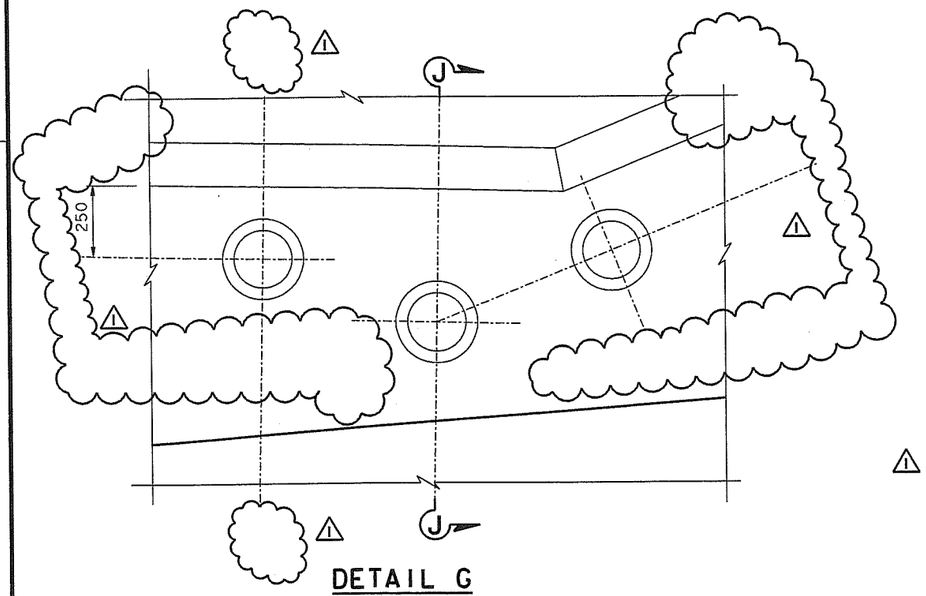

DETAIL G
1:10

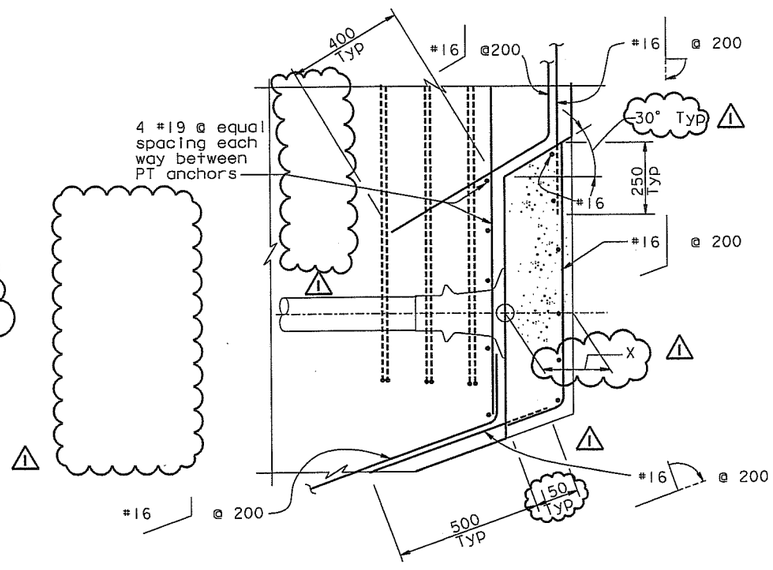

SECTION J-J
1:10

NOTES:

1. For additional details, see "W2 Cap Beam Blockout Details No.1" sheet.
2. Cap beam reinforcement not shown for clarity.
3. Local confining spiral reinforcement per tendon anchors shall be provided by PT tendon hardware supplier.
4. Blockouts on the cap beam south face shown, blockouts on the cap beam north face similar.

DIST.	COUNTY	ROUTE	KILOMETER POST TOTAL PROJECT	SHEET NO.	TOTAL SHEETS
04	SF	80	13.2/13.9	501R1	1204

Caltrans Metric

REGISTERED ENGINEER - CIVIL

12-6-04
PLANS APPROVAL DATE

REGISTERED PROFESSIONAL ENGINEER — John Sun — No. C 54648 — Exp. 12/31/05 — CIVIL — STATE OF CALIFORNIA

The State of California or its officers or agents shall not be responsible for the accuracy or completeness of electronic copies of this plan sheet.

T.Y. LIN / MOFFATT & NICHOL
825 BATTERY STREET
SAN FRANCISCO, CA 94111

Caltrans now has a web site! To get to the web site, go to: http://www.dot.ca.gov

REGISTERED PROFESSIONAL ENGINEER — James P. Duxbury — No. C 64677 — Exp. 06/30/07 — CIVIL — STATE OF CALIFORNIA

FOR REVISIONS ONLY

MARK	DATE	DESCRIPTIONS	BY	CH'D	CCO#
		REVISIONS			
1	07/21/06	W2 CAP BEAM ISD	JD	NV	23

CONTRACT CHANGE ORDER NO. 23
SHEET 80 OF 102

100% PS&E

TIME PLOTTED => 11:04:32
DATE PLOTTED => 10 MAY 2007
USERNAME => vtgnatovs

ALL DIMENSIONS ARE IN MILLIMETERS UNLESS OTHERWISE SHOWN

R. Valizadeh/V. Toan/Y.L./W.L./F.C.
DESIGN OVERSIGHT
SIGN OFF DATE 07/21/06

	BY	CHECKED
DESIGN	J. Sun	M. Chen
DETAILS	J. Duxbury	M. Chen
QUANTITIES	S. Shi	D. Harrison

PREPARED FOR THE STATE OF CALIFORNIA DEPARTMENT OF TRANSPORTATION

R. Manzanarez
PROJECT ENGINEER

BRIDGE NO. 34-0006L/R
KILOMETER POST 13.2/13.9

CU 04
EA 0120F1

SAN FRANCISCO OAKLAND BAY BRIDGE
EAST SPAN SEISMIC SAFETY PROJECT
SELF-ANCHORED SUSPENSION BRIDGE
(SUPERSTRUCTURE & TOWER)

W2 CAP BEAM BLOCKOUT DETAILS NO. 4

DISREGARD PRINTS BEARING EARLIER REVISION DATES
REVISION DATES (PRELIMINARY STAGE ONLY): 05/27/01 | 04/08/02 | 01/07/02 | 12/19/02
SHEET 84R1 OF

Rev. Date: 5-18-98

ORIGINAL SCALE IN MILLIMETERS FOR REDUCED PLANS 0 10 20 30 40 50 60 70 80 90 100

FILE => I:\bb\04-0120F1\sas\contract plans and cco\cco\cco#23\aecbb04.dgn

DIST.	COUNTY	ROUTE	KILOMETER POST TOTAL PROJECT	SHEET NO.	TOTAL SHEETS
04	SF	80	13.2/13.9	502RI	1204

REGISTERED ENGINEER - CIVIL

12-6-04
PLANS APPROVAL DATE

REGISTERED PROFESSIONAL ENGINEER — John Sun — No. C 54648 — Exp. 12/31/05 — CIVIL — STATE OF CALIFORNIA

The State of California or its officers or agents shall not be responsible for the accuracy or completeness of electronic copies of this plan sheet.

T.Y. LIN / MOFFATT & NICHOL
825 BATTERY STREET
SAN FRANCISCO, CA 94111

Caltrans now has a web site! To get to the web site, go to: http://www.dot.ca.gov

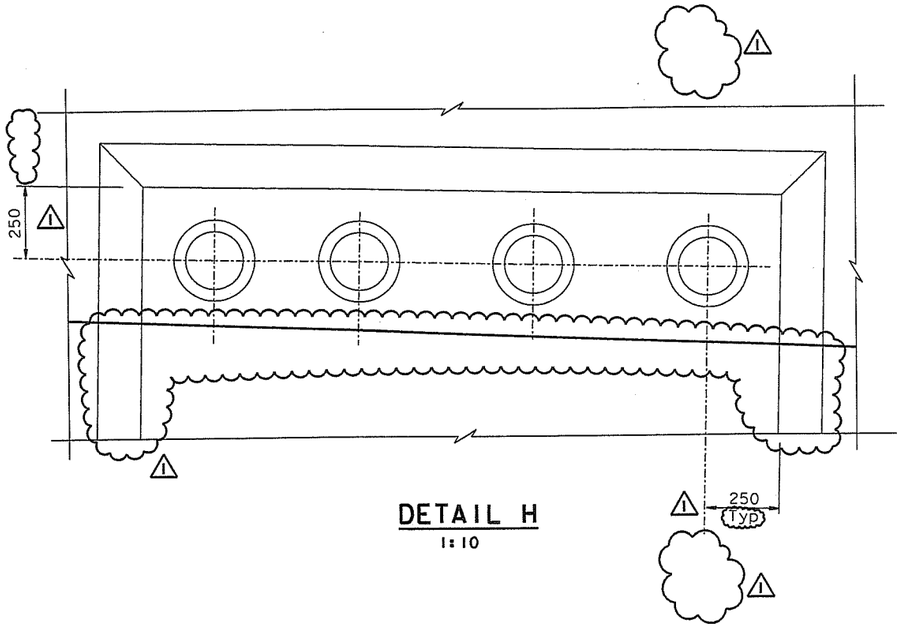

DETAIL H
1:10

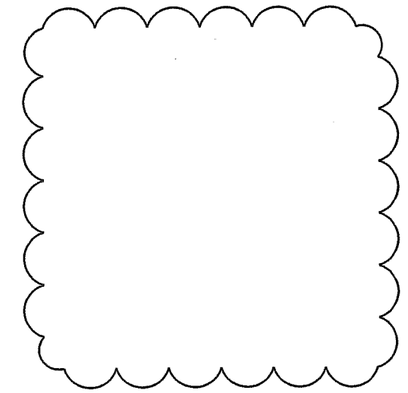

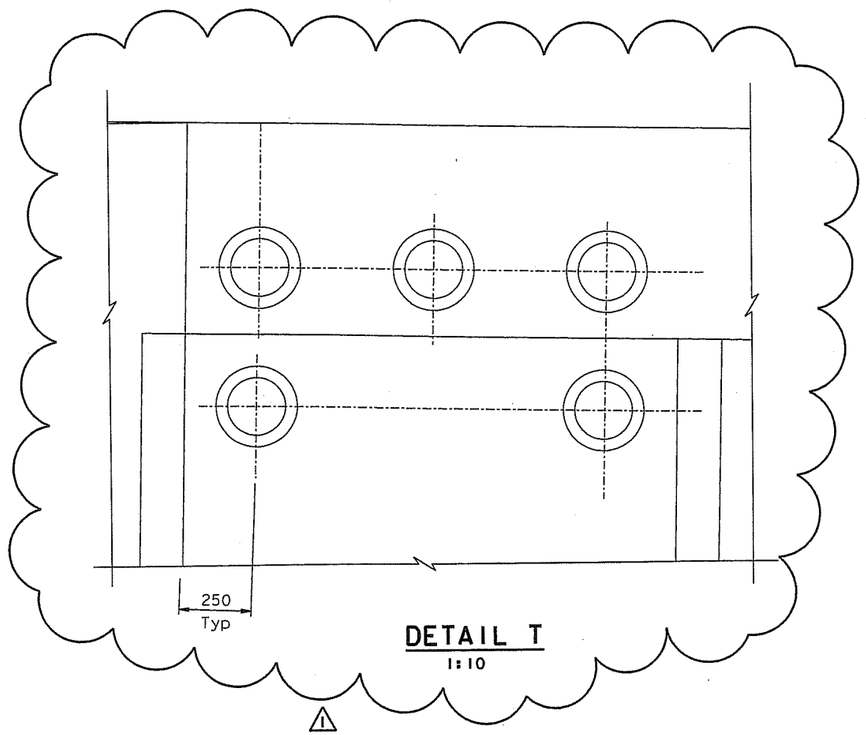

DETAIL T
1:10

REGISTERED PROFESSIONAL ENGINEER — James P. Duxbury — No. C 64677 — Exp. 06/30/07 — CIVIL — STATE OF CALIFORNIA

FOR REVISIONS ONLY

MARK	DATE	REVISIONS DESCRIPTIONS	BY	CH'D	CCO#
1	07/21/06	W2 CAP BEAM ISD	JD	NV	23

CONTRACT CHANGE ORDER NO. 23
SHEET 81 OF 102

NOTES:

1. For additional details, see "W2 Cap Beam Blockout Details No.1" sheet.
2. Cap beam reinforcement not shown for clarity.
3. Local confining spiral reinforcement per tendon anchors shall be provided by PT tendon hardware supplier.
4. Blockouts on the cap beam south face shown, blockouts on the cap beam north face similar.

100 % PS&E

USERNAME => vignatovs DATE PLOTTED => 10 MAY 2007 TIME PLOTTED => 11:07:46

ALL DIMENSIONS ARE IN MILLIMETERS UNLESS OTHERWISE SHOWN

R. Vallzadeh/V. Toan/Y.L./W.L./F.C.
DESIGN OVERSIGHT
SIGN OFF DATE 07/21/06

	BY	CHECKED
DESIGN	J. Sun	M. Chen
DETAILS	J. Duxbury	M. Chen
QUANTITIES	S. Shi	D. Harrison

PREPARED FOR THE STATE OF CALIFORNIA
DEPARTMENT OF TRANSPORTATION

R. Manzanarez
PROJECT ENGINEER

BRIDGE NO. 34-0006L/R
KILOMETER POST 13.2/13.9

SAN FRANCISCO OAKLAND BAY BRIDGE
EAST SPAN SEISMIC SAFETY PROJECT
SELF-ANCHORED SUSPENSION BRIDGE
(SUPERSTRUCTURE & TOWER)

W2 CAP BEAM BLOCKOUT DETAILS NO. 5

Rev. Date: 5-18-98

ORIGINAL SCALE IN MILLIMETERS FOR REDUCED PLANS 0 10 20 30 40 50 60 70 80 90 100

CU 04
EA 0120F1

DISREGARD PRINTS BEARING EARLIER REVISION DATES →

REVISION DATES (PRELIMINARY STAGE ONLY)								SHEET	OF
05/31/01	04/08/02	07/01/02	12/19/02					85RI	

FILE => I:\bb\04-0120O1\sas\contract plans and cco\cco\cco#23\aecbb05.dgn

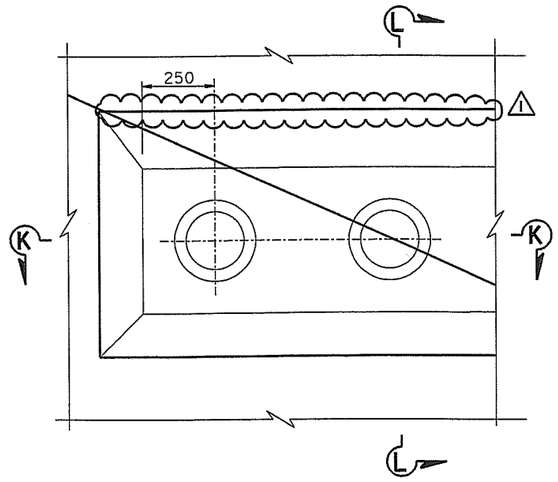

DETAIL J
1:10

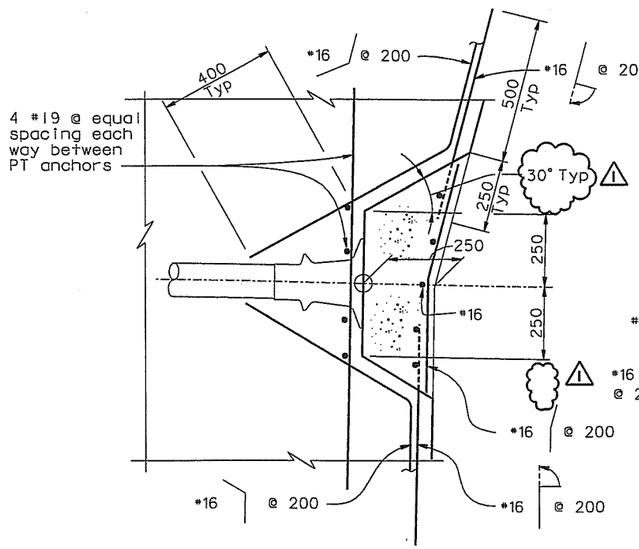

SECTION L-L
1:10

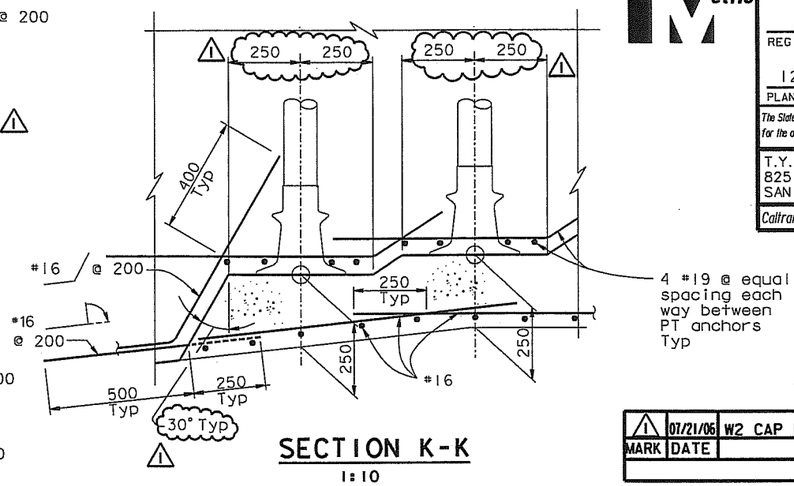

SECTION K-K
1:10

DETAIL K
1:10

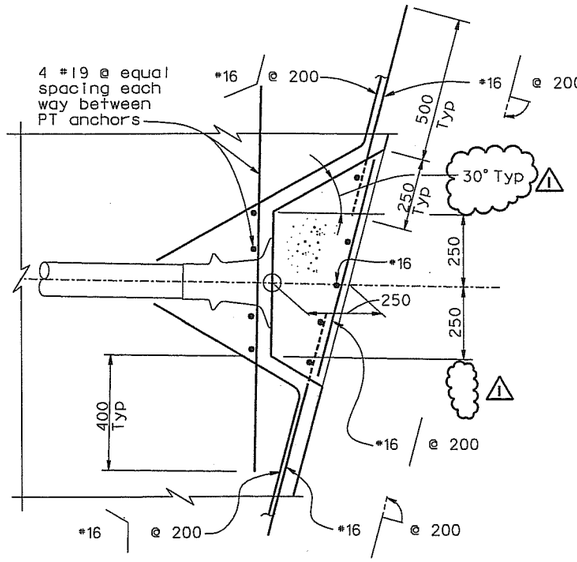

SECTION M-M
1:10

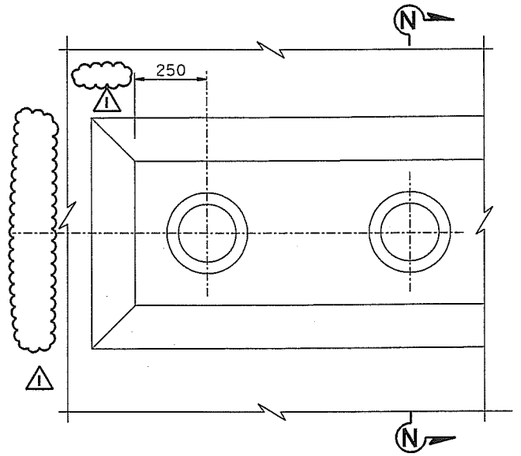

DETAIL L
1:10

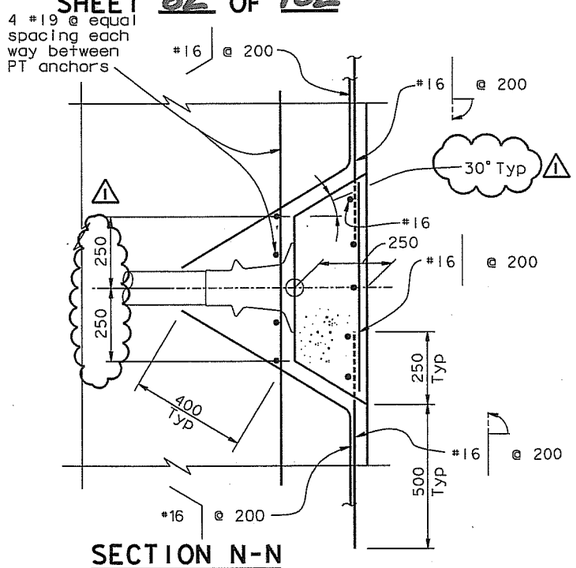

SECTION N-N
1:10

NOTES:

1. For additional details, see "W2 Cap Beam Blockout Details No.2" sheet.
2. Cap beam reinforcement not shown for clarity.
3. Local confining spiral reinforcement per tendon anchors shall be provided by PT tendon hardware supplier.
4. Blockouts on the cap beam south face shown, blockouts on the cap beam north face similar.

DIST.	COUNTY	ROUTE	KILOMETER POST TOTAL PROJECT	SHEET NO.	TOTAL SHEETS
04	SF	80	13.2/13.9	503R1	1204

Caltrans Metric

REGISTERED ENGINEER - CIVIL

12-6-04
PLANS APPROVAL DATE

The State of California or its officers or agents shall not be responsible for the accuracy or completeness of electronic copies of this plan sheet.

REGISTERED PROFESSIONAL ENGINEER — John Sun — No. C 54648 — Exp. 12/31/05 — CIVIL — STATE OF CALIFORNIA

T.Y. LIN / MOFFATT & NICHOL
825 BATTERY STREET
SAN FRANCISCO, CA 94111

Caltrans now has a web site! To get to the web site, go to: http://www.dot.ca.gov

REGISTERED PROFESSIONAL ENGINEER — James P. Duxbury — No. C 64677 — Exp. 06/30/07 — CIVIL — STATE OF CALIFORNIA

FOR REVISIONS ONLY

MARK	DATE	DESCRIPTIONS	BY	CH'D	CCO#
		REVISIONS			
1	07/21/06	W2 CAP BEAM ISD	JD	NV	23

CONTRACT CHANGE ORDER NO. 23
SHEET 82 OF 102

ALL DIMENSIONS ARE IN MILLIMETERS UNLESS OTHERWISE SHOWN

R. Valizadeh/V. Toan/Y.L./W.L./F.C.
DESIGN OVERSIGHT
SIGN OFF DATE 07/21/06

	BY	CHECKED
DESIGN	J. Sun	M. Chen
DETAILS	J. Duxbury	M. Chen
QUANTITIES	S. Shi	D. Harrison

PREPARED FOR THE STATE OF CALIFORNIA DEPARTMENT OF TRANSPORTATION

R. Manzanarez
PROJECT ENGINEER

BRIDGE NO. 34-0006L/R
KILOMETER POST 13.2/13.9

SAN FRANCISCO OAKLAND BAY BRIDGE
EAST SPAN SEISMIC SAFETY PROJECT
SELF-ANCHORED SUSPENSION BRIDGE
(SUPERSTRUCTURE & TOWER)

W2 CAP BEAM BLOCKOUT DETAILS NO. 6

Rev. Date: 5-18-98

ORIGINAL SCALE IN MILLIMETERS FOR REDUCED PLANS 0 10 20 30 40 50 60 70 80 90 100

CU 04
EA 0120F1

DISREGARD PRINTS BEARING EARLIER REVISION DATES

REVISION DATES (PRELIMINARY STAGE ONLY): 05/31/01 | 04/08/02 | 07/01/02 | 12/19/02

SHEET 86R1 OF

FILE => I:\bb\04-012001\sas\contract plans and cco\cco\cco#23\aecbb06.dgn

USERNAME => vignatovsk DATE PLOTTED => 10 MAY 2007 TIME PLOTTED => 11:08:32

100 % PS&E

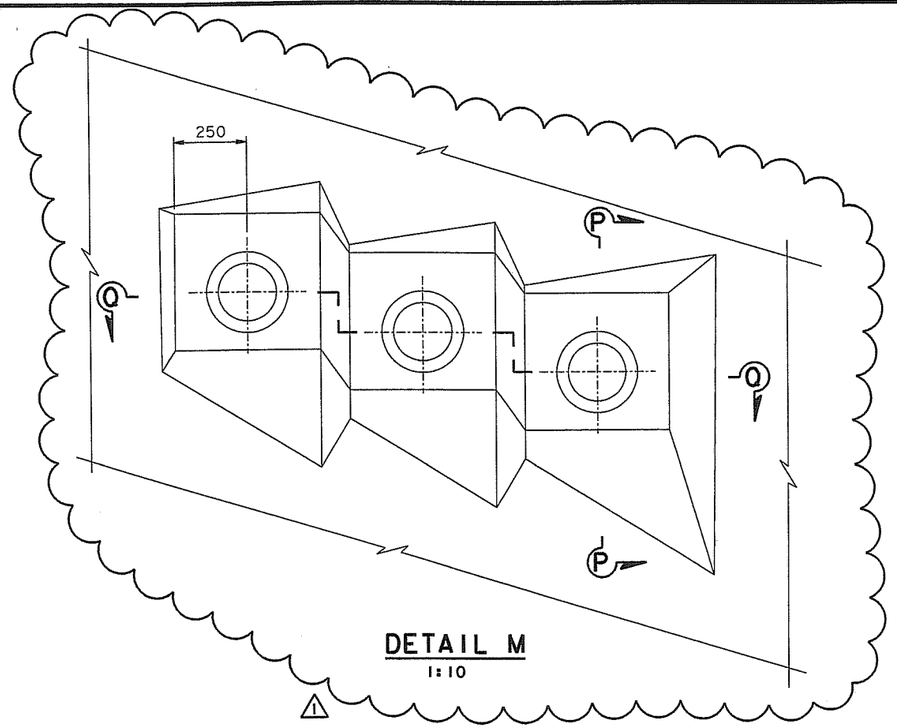

DETAIL M
1:10

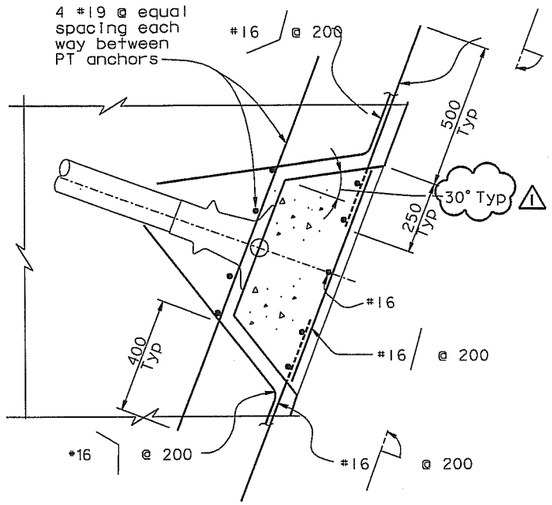

SECTION P-P
1:10

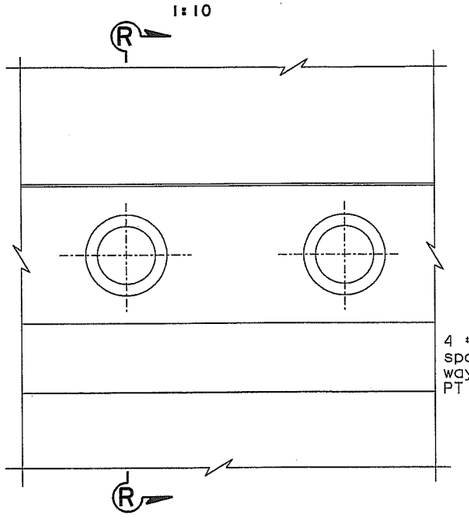

DETAIL N
1:10

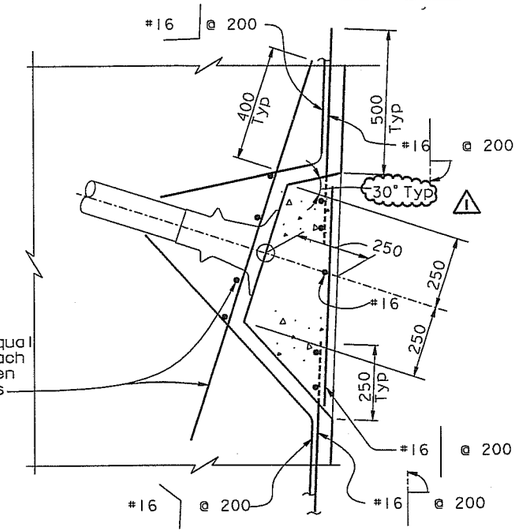

SECTION R-R
1:10

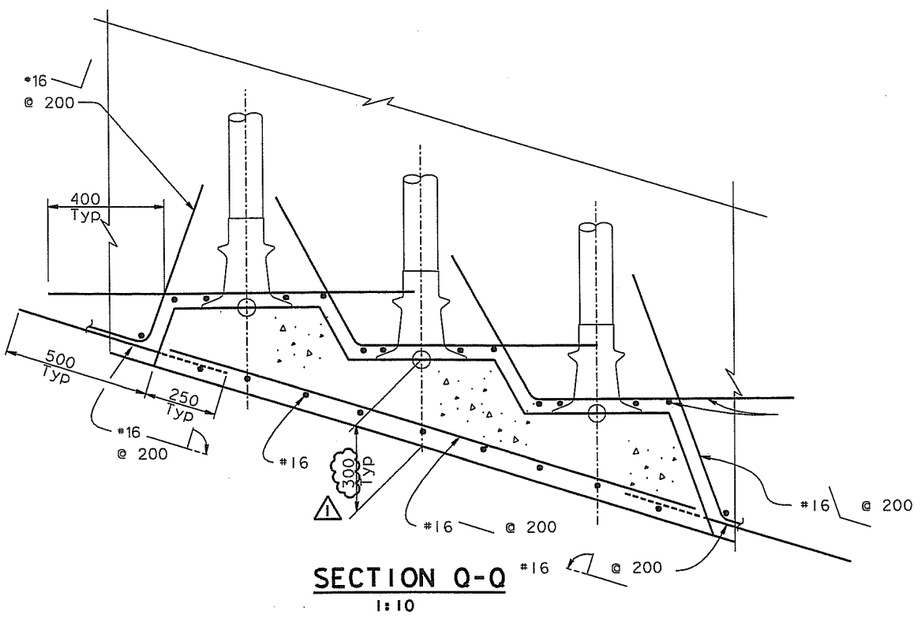

SECTION Q-Q
1:10

NOTES:

1. For additional details, see "W2 Cap Beam Blockout Details No.2" sheet.
2. Cap beam reinforcement not shown for clarity.
3. Local confining spiral reinforcement per tendon anchors shall be provided by PT tendon hardware supplier.
4. Blockouts on the cap beam south face shown, blockouts on the cap beam north face similar.

DIST.	COUNTY	ROUTE	KILOMETER POST TOTAL PROJECT	SHEET NO.	TOTAL SHEETS
04	SF	80	13.2/13.9	504R1	1204

REGISTERED ENGINEER - CIVIL
12-6-04
PLANS APPROVAL DATE
REGISTERED PROFESSIONAL ENGINEER — John Sun — No. C 54648 — Exp. 12/31/05 — CIVIL — STATE OF CALIFORNIA

The State of California or its officers or agents shall not be responsible for the accuracy or completeness of electronic copies of this plan sheet.

T.Y. LIN / MOFFATT & NICHOL
825 BATTERY STREET
SAN FRANCISCO, CA 94111

Caltrans now has a web site! To get to the web site, go to: http://www.dot.ca.gov

REGISTERED PROFESSIONAL ENGINEER — James P. Duxbury — No. C 64677 — Exp. 06/30/07 — CIVIL — STATE OF CALIFORNIA

FOR REVISIONS ONLY

MARK	DATE	DESCRIPTIONS	BY	CH'D	CCO#
		REVISIONS			
1	07/21/06	W2 CAP BEAM ISD	JD	NV	23

CONTRACT CHANGE ORDER NO. 23
SHEET 83 OF 102

100% PS&E

USERNAME => vlgnatovs\DATE PLOTTED => 10 MAY 2007 TIME PLOTTED => 11:09:11

ALL DIMENSIONS ARE IN MILLIMETERS UNLESS OTHERWISE SHOWN

R. Vaziadeh/V. Toan/Y.L./W.L./F.C.
DESIGN OVERSIGHT
SIGN OFF DATE 07/21/06

	BY	CHECKED
DESIGN	J. Sun	M. Chen
DETAILS	J. Duxbury	M. Chen
QUANTITIES	S. Shi	D. Harrison

PREPARED FOR THE STATE OF CALIFORNIA DEPARTMENT OF TRANSPORTATION

R. Manzanarez
PROJECT ENGINEER

BRIDGE NO. 34-0006L/R
KILOMETER POST 13.2/13.9

CU 04
EA 0120F1

DISREGARD PRINTS BEARING EARLIER REVISION DATES

SAN FRANCISCO OAKLAND BAY BRIDGE
EAST SPAN SEISMIC SAFETY PROJECT
SELF-ANCHORED SUSPENSION BRIDGE
(SUPERSTRUCTURE & TOWER)

W2 CAP BEAM BLOCKOUT DETAILS NO. 7

REVISION DATES (PRELIMINARY STAGE ONLY): 05/31/01 04/08/02 07/01/02
SHEET 087R1 OF

Rev. Date: 5-18-98

ORIGINAL SCALE IN MILLIMETERS FOR REDUCED PLANS 0 10 20 30 40 50 60 70 80 90 100

FILE => I:\bb\04-01200I\sas\contract plans and cco\cco\cco#23\oecbb07.dgn

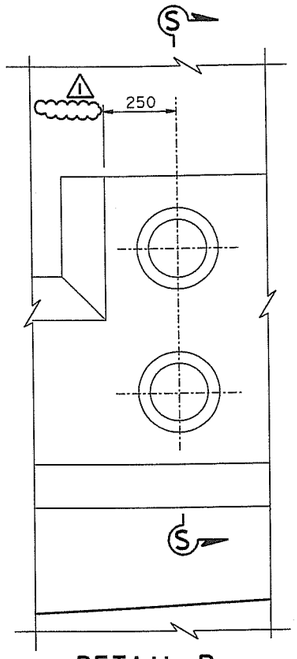

DETAIL P
1:10

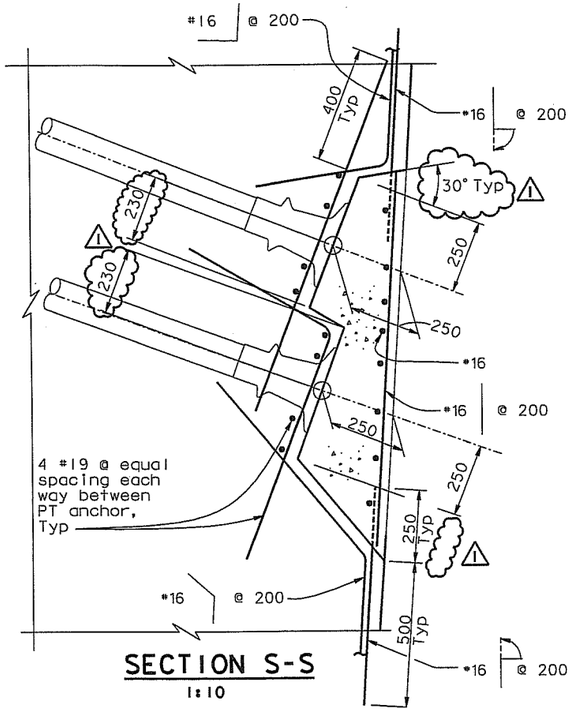

SECTION S-S
1:10

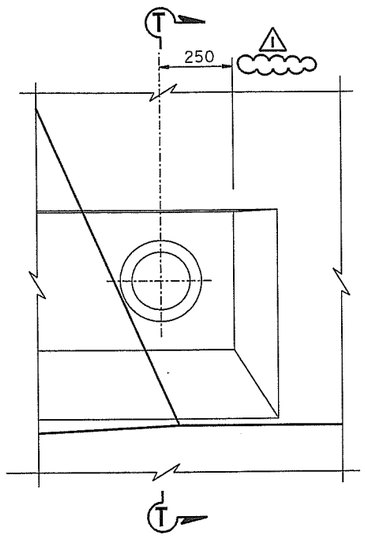

DETAIL Q
1:10

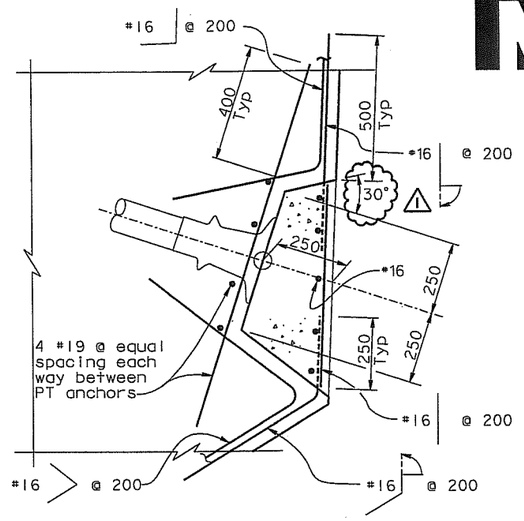

SECTION T-T
1:10

Caltrans Metric

DIST.	COUNTY	ROUTE	KILOMETER POST TOTAL PROJECT	SHEET NO.	TOTAL SHEETS
04	SF	80	13.2/13.9	505R1	1204

REGISTERED ENGINEER - CIVIL

PROFESSIONAL ENGINEER — John Sun — No. C 54648 — Exp. 12/31/05 — CIVIL — STATE OF CALIFORNIA

12-6-04
PLANS APPROVAL DATE

The State of California or its officers or agents shall not be responsible for the accuracy or completeness of electronic copies of this plan sheet.

T.Y. LIN / MOFFATT & NICHOL
825 BATTERY STREET
SAN FRANCISCO, CA 94111

Caltrans now has a web site! To get to the web site, go to: http://www.dot.ca.gov

PROFESSIONAL ENGINEER — James P. Duxbury — No. C 64677 — Exp. 06/30/07 — CIVIL — STATE OF CALIFORNIA

FOR REVISIONS ONLY

MARK	DATE	DESCRIPTIONS	BY	CH'D	CCO#
		REVISIONS			
1	07/21/06	W2 CAP BEAM ISD	JD	NV	23

CONTRACT CHANGE ORDER NO. 23
SHEET 84 OF 102

NOTES:

1. For additional details, see "W2 Cap Beam Blockout Details No.2" sheet.
2. Cap beam reinforcement not shown for clarity.
3. Local confining spiral reinforcement per tendon anchors shall be provided by PT tendon hardware supplier.
4. Blockouts on the cap beam south face shown, blockouts on the cap beam north face similar.

100 % PS&E

TIME PLOTTED => 11:09:46
DATE PLOTTED => 10 MAY 2007
USERNAME => vlgnatovs

ALL DIMENSIONS ARE IN MILLIMETERS UNLESS OTHERWISE SHOWN

R. Vallzadeh/V. Toan/Y.L./W.L./F.C.
DESIGN OVERSIGHT
SIGN OFF DATE 07/21/06

	BY	CHECKED
DESIGN	J. Sun	M. Chen
DETAILS	J. Duxbury	M. Chen
QUANTITIES	S. Shi	D. Harrison

PREPARED FOR THE STATE OF CALIFORNIA
DEPARTMENT OF TRANSPORTATION

R. Manzanarez
PROJECT ENGINEER

BRIDGE NO. 34-0006L/R
KILOMETER POST 13.2/13.9

SAN FRANCISCO OAKLAND BAY BRIDGE
EAST SPAN SEISMIC SAFETY PROJECT
SELF-ANCHORED SUSPENSION BRIDGE
(SUPERSTRUCTURE & TOWER)

W2 CAP BEAM BLOCKOUT DETAILS NO. 8

Rev. Date: 5-18-98

ORIGINAL SCALE IN MILLIMETERS FOR REDUCED PLANS 0 10 20 30 40 50 60 70 80 90 100

CU 04
EA 0120F1

DISREGARD PRINTS BEARING EARLIER REVISION DATES

REVISION DATES (PRELIMINARY STAGE ONLY): 05/31/01 | 09/06/02 | 07/01/02 | 12/19/02

SHEET 88R1 OF

FILE => I:\bb\04-012001\sas\contract plans and cco\cco\cco#23\aecbb08.dgn

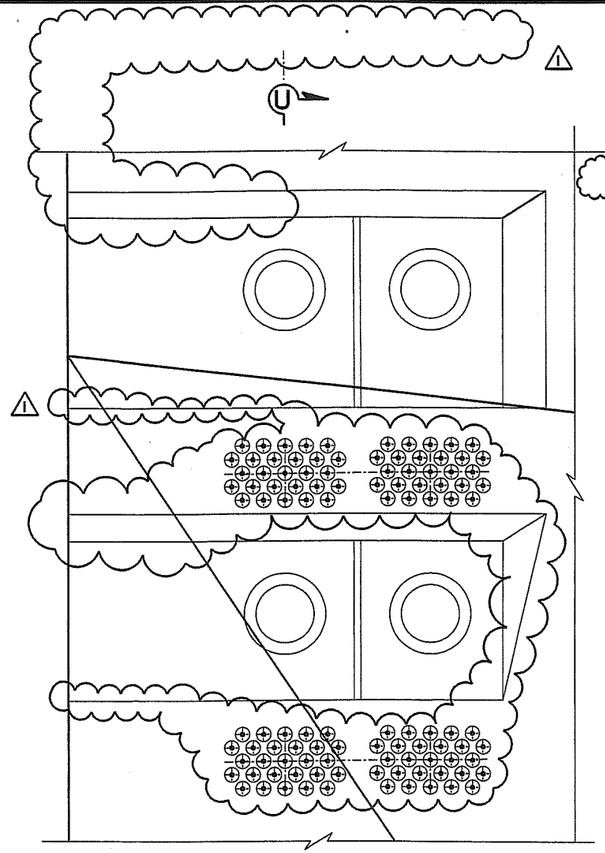

DETAIL R
1:10

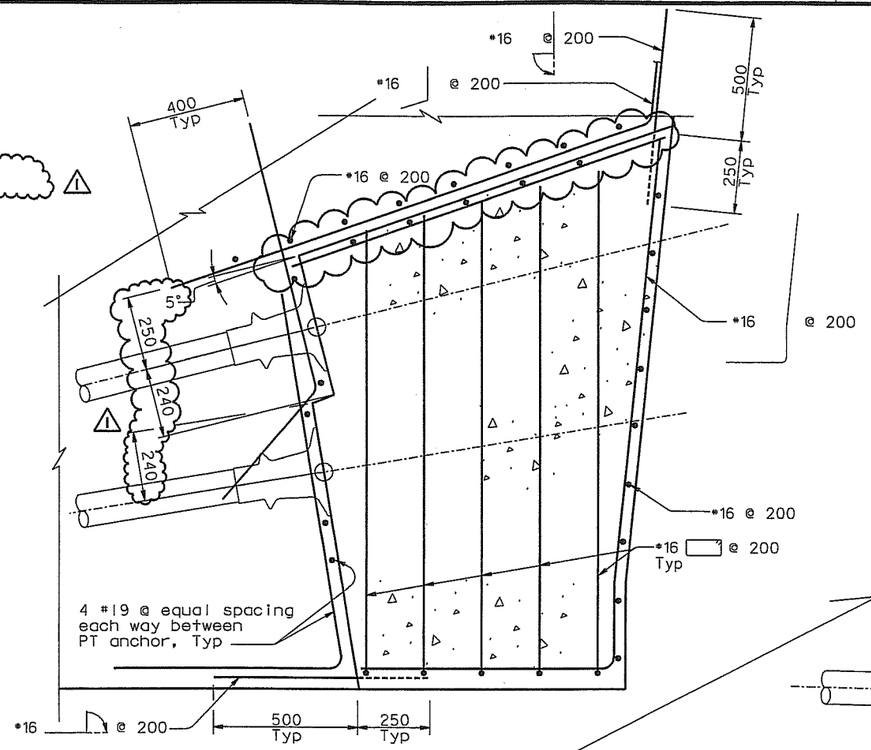

SECTION V-V
1:10

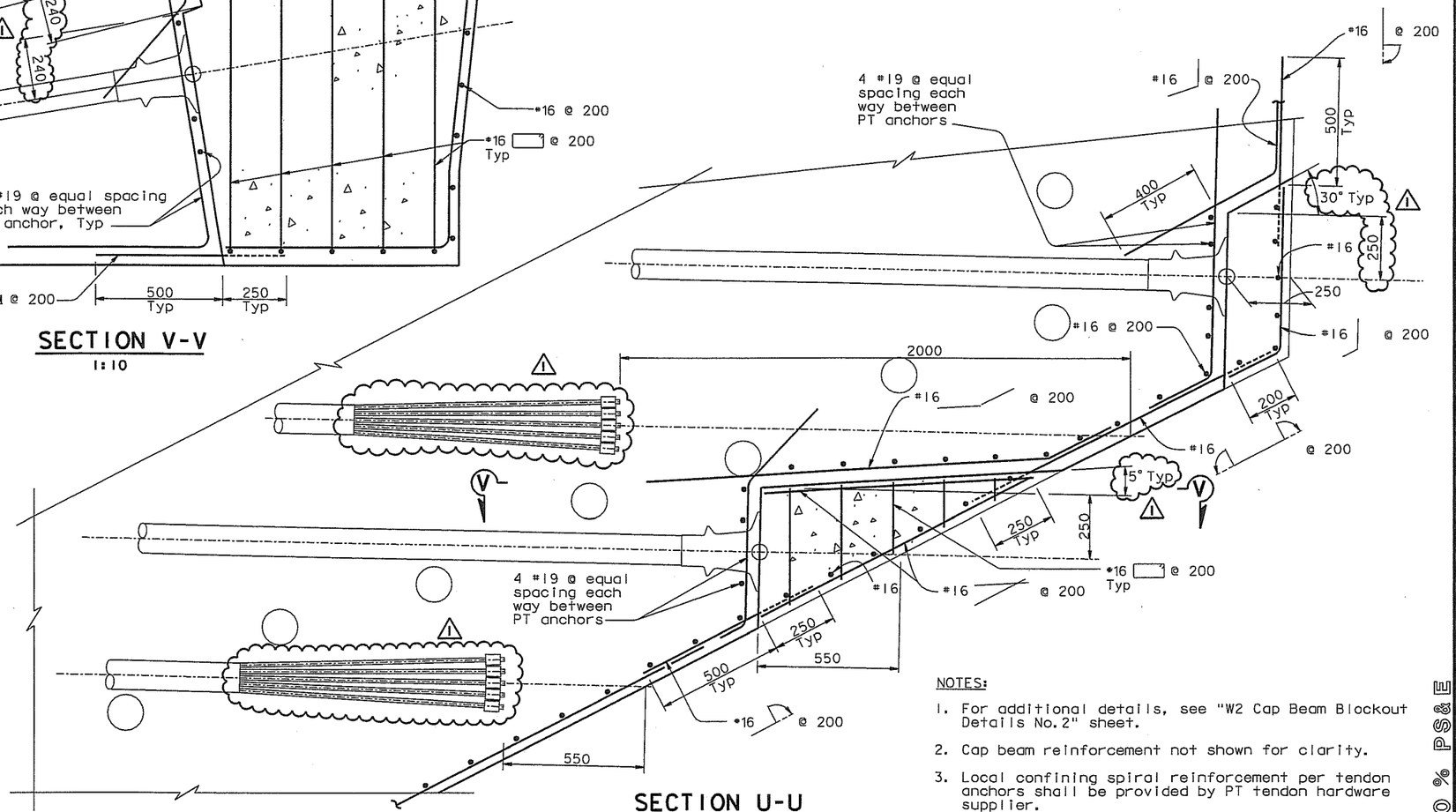

SECTION U-U
1:10

NOTES:

1. For additional details, see "W2 Cap Beam Blockout Details No.2" sheet.
2. Cap beam reinforcement not shown for clarity.
3. Local confining spiral reinforcement per tendon anchors shall be provided by PT tendon hardware supplier.

DIST.	COUNTY	ROUTE	KILOMETER POST TOTAL PROJECT	SHEET NO.	TOTAL SHEETS
04	SF	80	13.2/13.9	506R1	1204

Caltrans Metric

REGISTERED ENGINEER - CIVIL

12-6-04
PLANS APPROVAL DATE

REGISTERED PROFESSIONAL ENGINEER — John Sun — No. C 54648 — Exp. 12/31/05 — CIVIL — STATE OF CALIFORNIA

The State of California or its officers or agents shall not be responsible for the accuracy or completeness of electronic copies of this plan sheet.

T.Y. LIN / MOFFATT & NICHOL
825 BATTERY STREET
SAN FRANCISCO, CA 94111

Caltrans now has a web site! To get to the web site, go to: http://www.dot.ca.gov

REGISTERED PROFESSIONAL ENGINEER — James P. Duxbury — No. C 64677 — Exp. 06/30/07 — CIVIL — STATE OF CALIFORNIA

FOR REVISIONS ONLY

MARK	DATE	DESCRIPTIONS	BY	CH'D	CCO#
		REVISIONS			
1	07/21/06	W2 CAP BEAM ISD	JD	NV	23

CONTRACT CHANGE ORDER NO. 23
SHEET 85 OF 102

ALL DIMENSIONS ARE IN MILLIMETERS UNLESS OTHERWISE SHOWN

SAN FRANCISCO OAKLAND BAY BRIDGE
EAST SPAN SEISMIC SAFETY PROJECT
SELF-ANCHORED SUSPENSION BRIDGE
(SUPERSTRUCTURE & TOWER)

W2 CAP BEAM BLOCKOUT DETAILS NO. 9

R. Valizadeh/V. Toan/Y.L./W.L./F.C.
DESIGN OVERSIGHT
SIGN OFF DATE 07/21/06

	BY	CHECKED
DESIGN	J. Sun	M. Chen
DETAILS	J. Duxbury	M. Chen
QUANTITIES	S. Shi	D. Harrison

PREPARED FOR THE STATE OF CALIFORNIA DEPARTMENT OF TRANSPORTATION

R. Manzanarez
PROJECT ENGINEER

BRIDGE NO. 34-0006L/R
KILOMETER POST 13.2/13.9

CU 04
EA 0120F1

Rev. Date: 5-18-98

ORIGINAL SCALE IN MILLIMETERS FOR REDUCED PLANS 0 10 20 30 40 50 60 70 80 90 100

DISREGARD PRINTS BEARING EARLIER REVISION DATES

REVISION DATES (PRELIMINARY STAGE ONLY): 05/31/01 | 04/08/02 | 07/01/02 | 12/19/02

SHEET 89R1 OF

FILE => I:\bb\04-0120F1\sas\contract plans and cco\cco\cco#23\aecbb09.dgn

100% PS&E

TIME PLOTTED => 11:10:32
DATE PLOTTED => 10 MAY 2007
USERNAME => vignatov

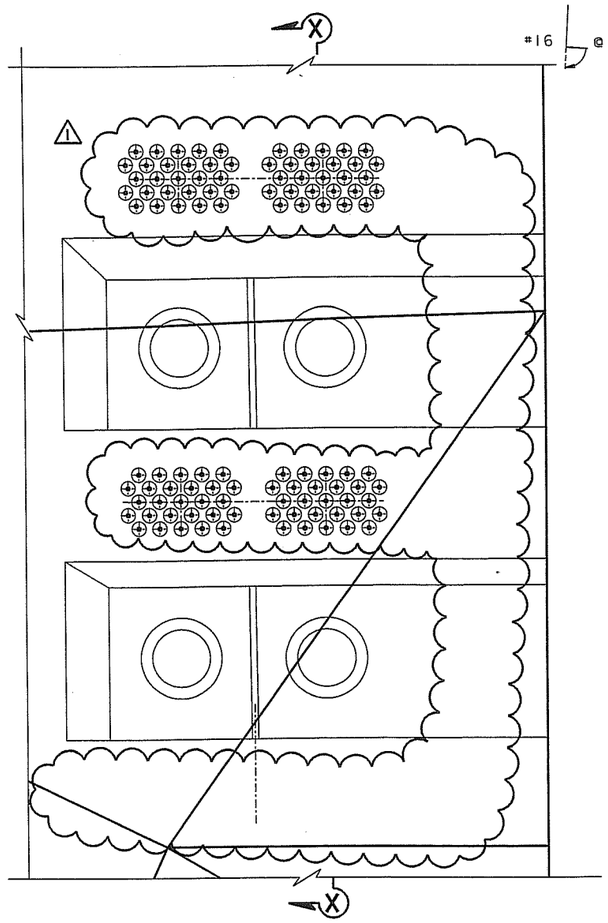

DETAIL S
1:10

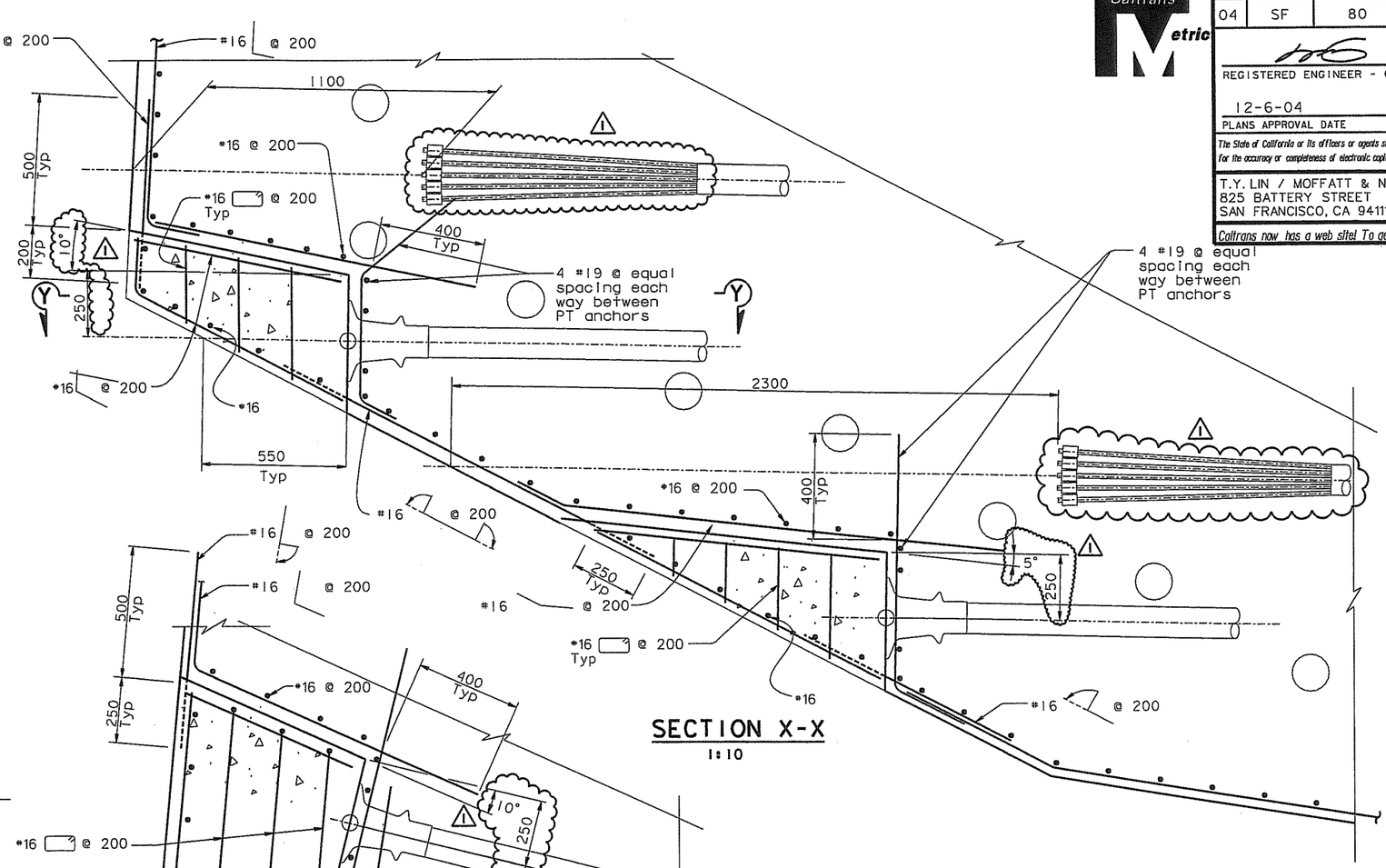

SECTION X-X
1:10

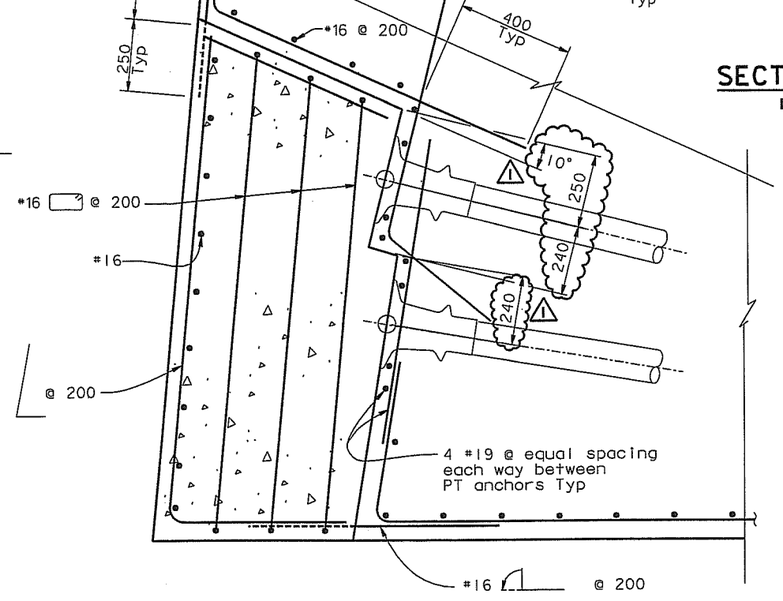

SECTION Y-Y
1:10

NOTES:

1. For additional details, see "W2 Cap Beam Blockout Details No.2" sheet.
2. Cap beam reinforcement not shown for clarity.
3. Local confining spiral reinforcement per tendon anchors shall be provided by PT tendon hardware supplier.

DIST.	COUNTY	ROUTE	KILOMETER POST TOTAL PROJECT	SHEET NO.	TOTAL SHEETS
04	SF	80	13.2/13.9	507R1	1204

REGISTERED ENGINEER - CIVIL

12-6-04
PLANS APPROVAL DATE

REGISTERED PROFESSIONAL ENGINEER — John Sun — No. C 54648 — Exp. 12/31/05 — CIVIL — STATE OF CALIFORNIA

The State of California or its officers or agents shall not be responsible for the accuracy or completeness of electronic copies of this plan sheet.

T.Y. LIN / MOFFATT & NICHOL
825 BATTERY STREET
SAN FRANCISCO, CA 94111

Caltrans now has a web site! To get to the web site, go to: http://www.dot.ca.gov

REGISTERED PROFESSIONAL ENGINEER — James P. Duxbury — No. C 64677 — Exp. 06/30/07 — CIVIL — STATE OF CALIFORNIA

FOR REVISIONS ONLY

MARK	DATE	DESCRIPTIONS	BY	CH'D	CCO#
		REVISIONS			
1	07/21/06	W2 CAP BEAM ISD	JD	NV	23

CONTRACT CHANGE ORDER NO. 23
SHEET 86 OF 102

ALL DIMENSIONS ARE IN MILLIMETERS UNLESS OTHERWISE SHOWN

DESIGN	BY J. Sun	CHECKED M. Chen
DETAILS	BY J. Duxbury	CHECKED M. Chen
QUANTITIES	BY S. Shi	CHECKED D. Harrison

PREPARED FOR THE STATE OF CALIFORNIA DEPARTMENT OF TRANSPORTATION

R. Valizadeh/V. Toan/Y.L./W.L./F.C.
DESIGN OVERSIGHT
SIGN OFF DATE 07/21/06

R. Manzanarez
PROJECT ENGINEER

CU 04
EA 0120F1

BRIDGE NO. 34-0006L/R
KILOMETER POST 13.2/13.9

SAN FRANCISCO OAKLAND BAY BRIDGE
EAST SPAN SEISMIC SAFETY PROJECT
SELF-ANCHORED SUSPENSION BRIDGE
(SUPERSTRUCTURE & TOWER)

W2 CAP BEAM BLOCKOUT DETAILS NO. 10

Rev. Date: 5-18-98

ORIGINAL SCALE IN MILLIMETERS FOR REDUCED PLANS 0 10 20 30 40 50 60 70 80 90 100

DISREGARD PRINTS BEARING EARLIER REVISION DATES

REVISION DATES (PRELIMINARY STAGE ONLY): 05/31/01 | 01/30/02 | 07/29/02 | 12/19/02

SHEET 90R1 OF

FILE => I:\bb\04-0120F1\sas\contract plans and cco\cco\cco#23\decbb10.dgn

100 % PS&E

TIME PLOTTED => 11:11:12
10 MAY 2007
USERNAME => vignatovs
DATE PLOTTED =>

DIST.	COUNTY	ROUTE	KILOMETER POST TOTAL PROJECT	SHEET NO.	TOTAL SHEETS
04	SF	80	13.2/13.9	508R1	1204

Caltrans Metric

REGISTERED ENGINEER - CIVIL

12-6-04
PLANS APPROVAL DATE

REGISTERED PROFESSIONAL ENGINEER John Sun No. C 54648 Exp. 12/31/05 CIVIL STATE OF CALIFORNIA

The State of California or its officers or agents shall not be responsible for the accuracy or completeness of electronic copies of this plan sheet.

T.Y. LIN / MOFFATT & NICHOL
825 BATTERY STREET
SAN FRANCISCO, CA 94111

Caltrans now has a web site! To get to the web site, go to: http://www.dot.ca.gov

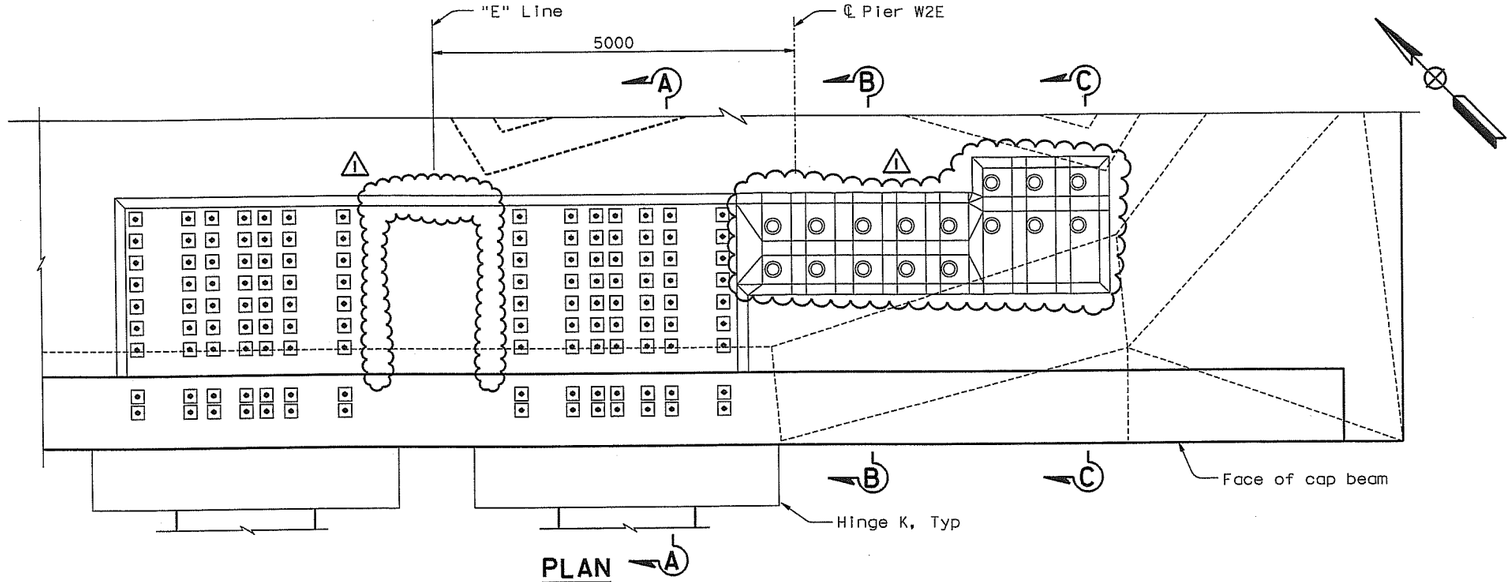

PLAN
1:40
(36 Dia post-tension rod and 12-15 Dia strand tendon blockouts)

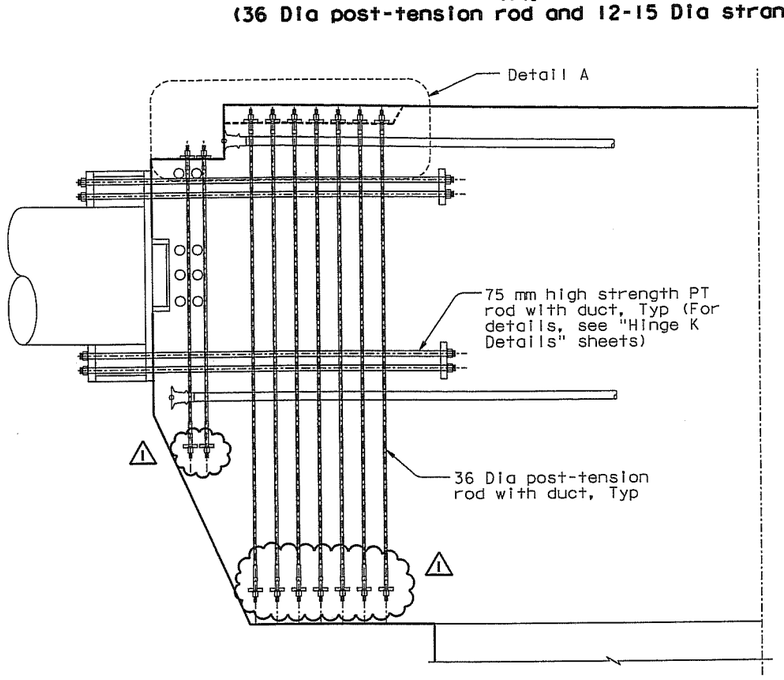

SECTION A-A
1:40

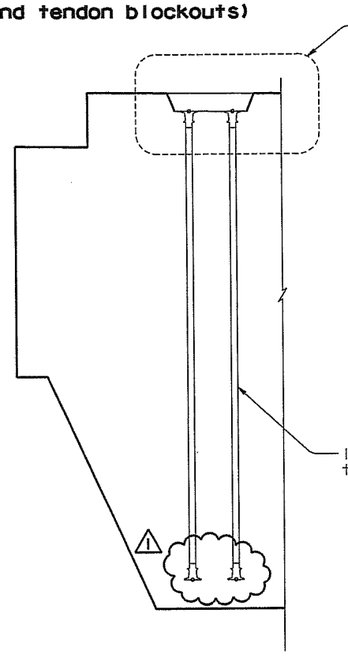

SECTION B-B
1:40

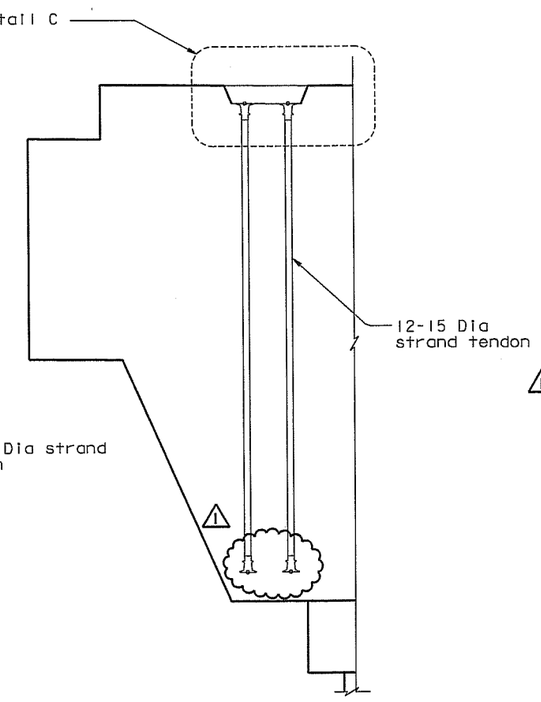

SECTION C-C
1:40

ALL DIMENSIONS ARE IN MILLIMETERS UNLESS OTHERWISE SHOWN

NOTES:

1. Cap beam reinforcement not shown for clarity.
2. Local confining spiral reinforcement for tendon anchors shall be provided by PT tendon hardware supplier.
3. Blockouts on the cap beam "E" Line shown, blockouts on the cap beam "W" Line similar.
4. For Details A and C, see "W2 Cap Beam Blockout Details No. 12" sheet.
5. For additional prestressing details, see "Prestressing Notes" sheet.

REGISTERED PROFESSIONAL ENGINEER James P. Duxbury No. C 64677 Exp. 06/30/07 CIVIL STATE OF CALIFORNIA

FOR REVISIONS ONLY

MARK	DATE	DESCRIPTIONS	BY	CH'D	CCO#
1	07/21/06	W2 CAP BEAM ISD	JD	NV	23

REVISIONS

CONTRACT CHANGE ORDER NO. 23
SHEET 87 OF 102

100 % PS&E

SAN FRANCISCO OAKLAND BAY BRIDGE
EAST SPAN SEISMIC SAFETY PROJECT
SELF-ANCHORED SUSPENSION BRIDGE
(SUPERSTRUCTURE & TOWER)

W2 CAP BEAM BLOCKOUT DETAILS NO. 11

R. Valizadeh/V. Toan/Y.L./W.L./F.C.
DESIGN OVERSIGHT
Roger Valizadeh / Vong Toan / Y. Liu
SIGN OFF DATE 07/21/06

	BY	CHECKED
DESIGN	J. Sun	M. Chen
DETAILS	J. Duxbury	M. Chen
QUANTITIES	S. Shi	D. Harrison

PREPARED FOR THE STATE OF CALIFORNIA DEPARTMENT OF TRANSPORTATION

R. Manzanarez
PROJECT ENGINEER

BRIDGE NO. 34-0006L/R
KILOMETER POST 13.2/13.9

Rev. Date: 5-18-98

ORIGINAL SCALE IN MILLIMETERS FOR REDUCED PLANS 0 10 20 30 40 50 60 70 80 90 100

CU 04
EA 0120F1

DISREGARD PRINTS BEARING EARLIER REVISION DATES

REVISION DATES (PRELIMINARY STAGE ONLY) 05/31/01 04/26/02 07/01/02 12/19/02

SHEET 91R1 OF

FILE => I:\bb\04-012001\sas\contract plans and cco\cco\cco=23\aecbb11.dgn

USERNAME => vignatovs DATE PLOTTED => 10 MAY 2007 TIME PLOTTED => 11:15:30

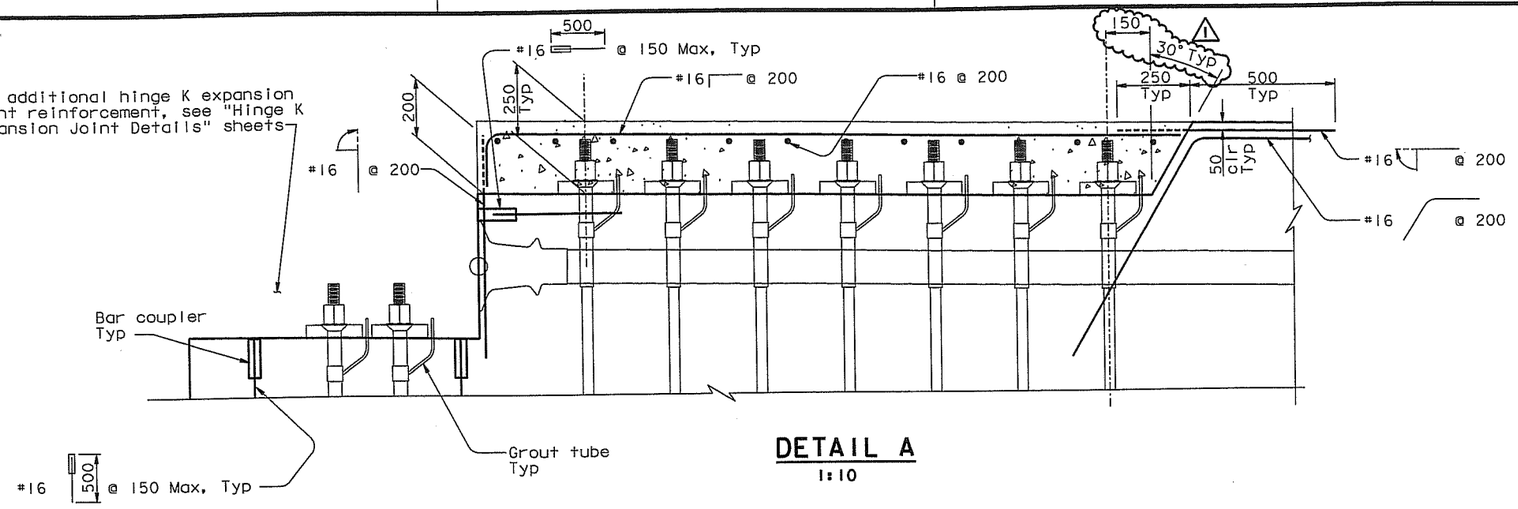

DETAIL A
1:10

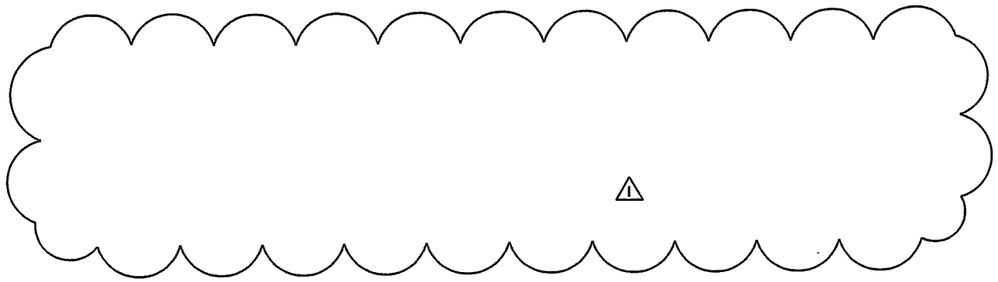

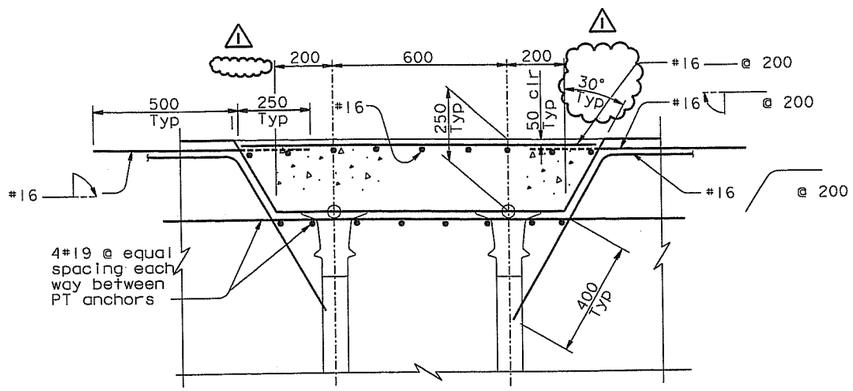

DETAIL C
1:10

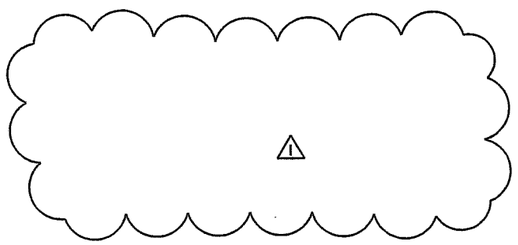

NOTES:

1. For additional details, see "W2 Cap Beam Blockout Details No. 11" sheet.
2. Cap beam reinforcement not shown for clarity.
3. Local confining spiral reinforcement per tendon anchors shall be provided by PT tendon hardware supplier.

DIST.	COUNTY	ROUTE	KILOMETER POST TOTAL PROJECT	SHEET NO.	TOTAL SHEETS
04	SF	80	13.2/13.9	509R1	1204

REGISTERED ENGINEER - CIVIL

12-6-04
PLANS APPROVAL DATE

REGISTERED PROFESSIONAL ENGINEER — John Sun — No. C 54648 — Exp. 12/31/05 — CIVIL — STATE OF CALIFORNIA

The State of California or its officers or agents shall not be responsible for the accuracy or completeness of electronic copies of this plan sheet.

T.Y. LIN / MOFFATT & NICHOL
825 BATTERY STREET
SAN FRANCISCO, CA 94111

Caltrans now has a web site! To get to the web site, go to: http://www.dot.ca.gov

FOR REVISIONS ONLY

MARK	DATE	DESCRIPTIONS	BY	CH'D	CCO#
		REVISIONS			
1	01/21/06	W2 CAP BEAM ISD	JD	NV	23

REGISTERED PROFESSIONAL ENGINEER — John P. Duxbury — No. C 64677 — Exp. 06/30/07 — CIVIL — STATE OF CALIFORNIA

CONTRACT CHANGE ORDER NO. 23
SHEET 88 OF 102

100 % PS&E

USERNAME => vlignatovs DATE PLOTTED => 10 MAY 2007 TIME PLOTTED => 11:16:21

ALL DIMENSIONS ARE IN MILLIMETERS UNLESS OTHERWISE SHOWN

SAN FRANCISCO OAKLAND BAY BRIDGE
EAST SPAN SEISMIC SAFETY PROJECT
SELF-ANCHORED SUSPENSION BRIDGE
(SUPERSTRUCTURE & TOWER)

W2 CAP BEAM BLOCKOUT DETAILS NO. 12

DESIGN	BY J. Sun	CHECKED M. Chen	PREPARED FOR THE STATE OF CALIFORNIA DEPARTMENT OF TRANSPORTATION
DETAILS	BY J. Duxbury	CHECKED M. Chen	
QUANTITIES	BY S. Shi	CHECKED D. Harrison	

R. Valizadeh/V. Toan/Y.L./W.L./F.C.
DESIGN OVERSIGHT
SIGN OFF DATE 07/21/06

R. Manzanarez
PROJECT ENGINEER

BRIDGE NO. 34-0006L/R
KILOMETER POST 13.2/13.9
CU 04
EA 0120F1

DISREGARD PRINTS BEARING EARLIER REVISION DATES →

REVISION DATES (PRELIMINARY STAGE ONLY)										SHEET	OF
05/27/01	04/08/02	07/26/02	12/19/02							92R1	

ORIGINAL SCALE IN MILLIMETERS FOR REDUCED PLANS 0 10 20 30 40 50 60 70 80 90 100

Rev. Date: 5-18-98

FILE => I:\bb\04-0120F1\sas\contract plans and cco\cco\cco#23\aecbb12.dgn

Caltrans now has a web site! To get to the web site, go to: http://www.dot.ca.gov

Caltrans Metric

DIST.	COUNTY	ROUTE	KILOMETER POST TOTAL PROJECT	SHEET NO.	TOTAL SHEETS
04	SF	80	13.2/13.9	511RI	1204

REGISTERED ENGINEER - CIVIL
12-6-04
PLANS APPROVAL DATE

REGISTERED PROFESSIONAL ENGINEER — Alex E. Sanjines, No. C 051153, Exp. 9/30/07, CIVIL, STATE OF CALIFORNIA

The State of California or its officers or agents shall not be responsible for the accuracy or completeness of electronic copies of this plan sheet.

T.Y. LIN / MOFFATT & NICHOL
825 BATTERY STREET
SAN FRANCISCO, CA 94111

Caltrans now has a web site! To get to the web site, go to: http://www.dot.ca.gov

MARK	DATE	REVISIONS	CH'D	CCO#
1	07/21/06	E2 CAP BEAM ISD, E2TI CCO 34	AS	NV 23

CONTRACT CHANGE ORDER NO. 23
SHEET 89 OF 102

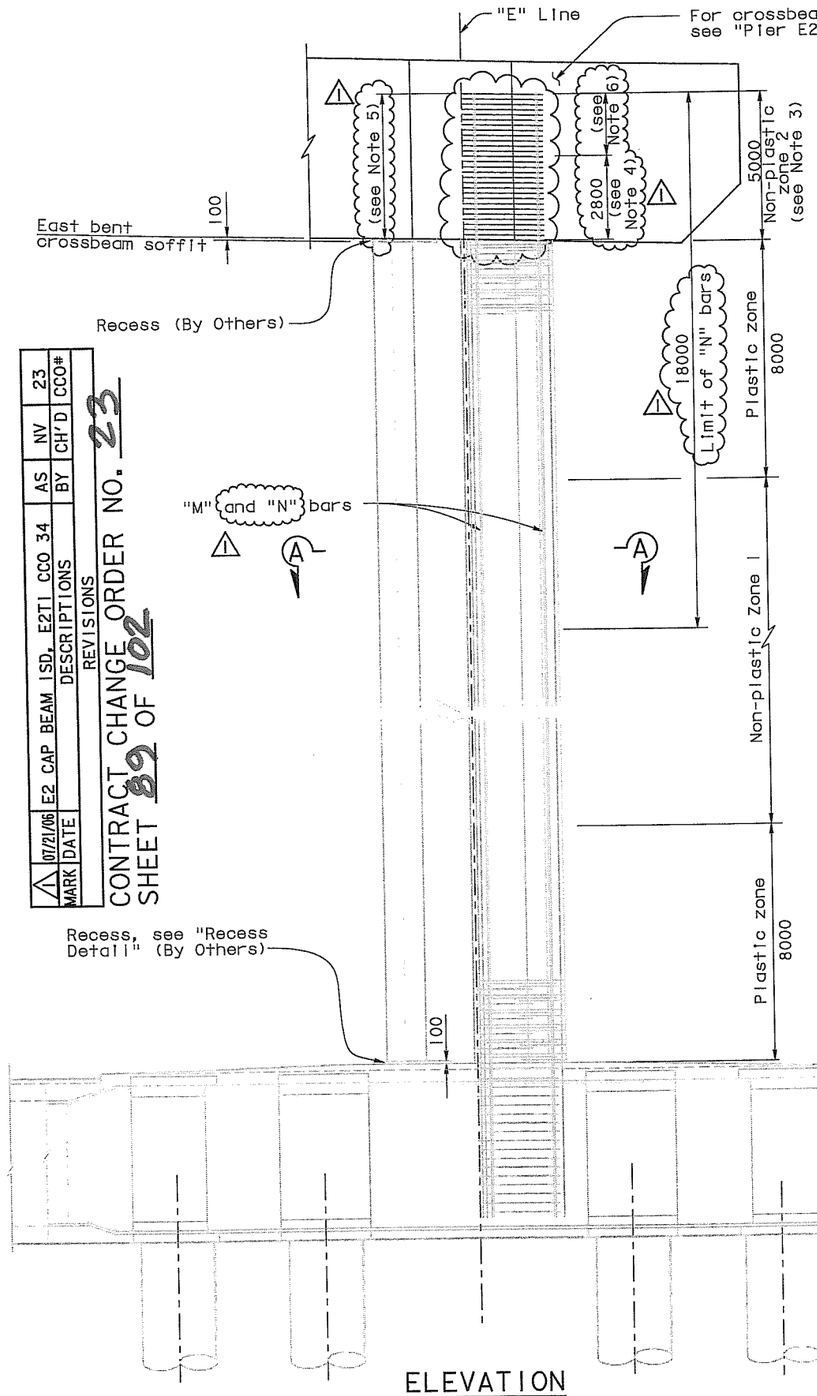

ELEVATION
1:100

Pier reinforcement (see Note 1)																	
"M" bars		"N" bars		"T" and "L" bars				Continuous welded hoop									
				Plastic zone		Non-plastic zone 1		Plastic zone		Non-plastic zone 1		Non-plastic zone 2		Non-plastic zone 3	
Bundle No.-sizes	Total per pier	No.-size	Total per pier	Size	spacing	Size	spacing	No.-size	Spacing	No.-size	Spacing	No.-size	Spacing	No.-size	Spacing
48-#57 outer 36-#43 Inner	192 144	#43	40	#22	100	#22	100	2-#25	100	#25	100	#25	900 Max	2-#25	150

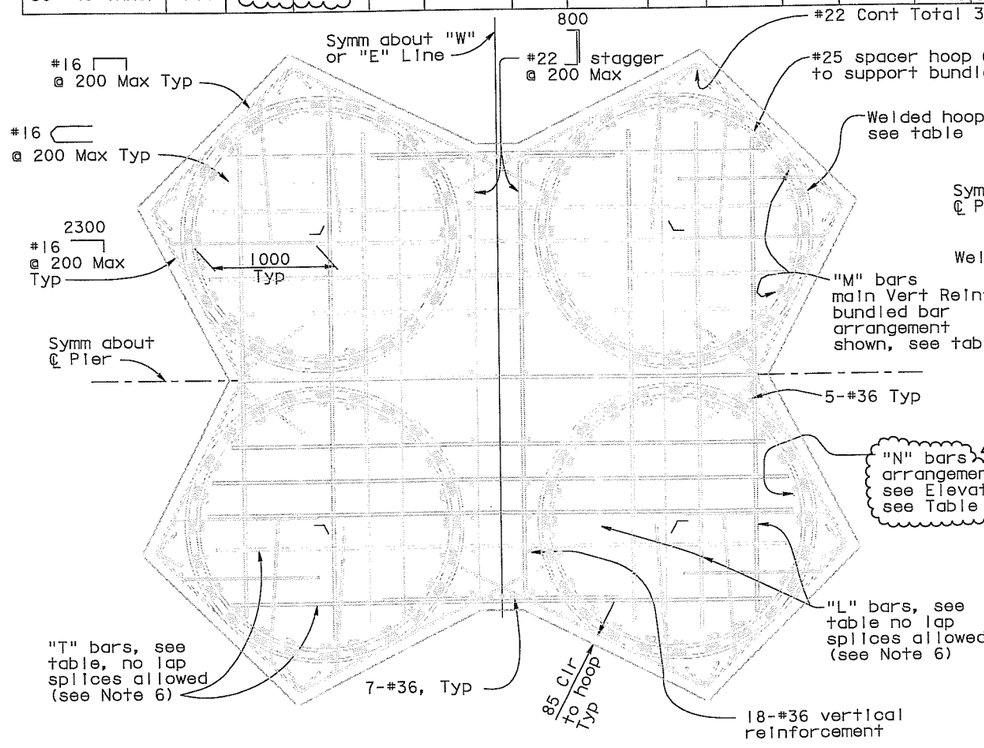

SECTION B-B
1:25

BUTT WELDED CONTINUOUS HOOP
NTS

135° SEISMIC HOOK
No scale

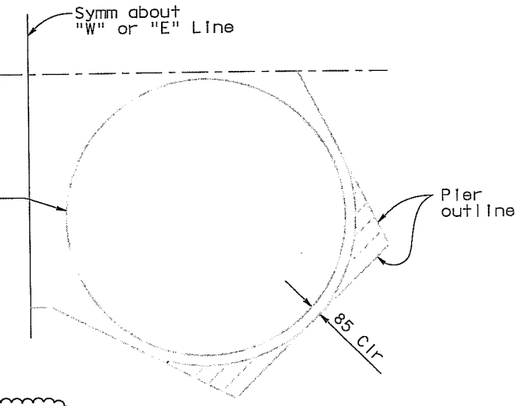

RECESS DETAIL
1:25

NOTES:

1. Reinforcement is for information only, and by Others.
2. Main vertical reinforcement and hoop reinforcement are "Ultimate" butt splices.
3. Contractor shall remove the corrosion protection from all reinforcing and shall roughen the existing Pier E2 concrete surface prior to pouring the concrete crossbeam.
4. Contractor shall remove existing continuous welded hoops down to soffit. Replace with continuous welded hoops spaced at 175 mm placed at 2% slope up to 2800 mm from soffit.
5. Refer to "Pier E2 Details No.10" sheet for main vertical reinforcement cutoff allowance.
6. Contractor shall remove existing continuous welded hoops and replace with #36 □ @ 175 mm placed at 2% slope. See Section F-F on "Pier E2 Detail No.4" sheet.

LEGEND:

100 Recess

100 % PS&E

ALL DIMENSIONS ARE IN MILLIMETERS UNLESS OTHERWISE SHOWN

R. Valizadeh/V. Toan/Y.L./W.L./F.C.
DESIGN OVERSIGHT
SIGN OFF DATE 07/21/06

	BY	CHECKED
DESIGN	A. Sanjines	J. Chan
DETAILS	R. Xu	J. Chan
QUANTITIES	R. Xu	C. Bernardo

PREPARED FOR THE STATE OF CALIFORNIA DEPARTMENT OF TRANSPORTATION

R. Manzanarez
PROJECT ENGINEER

CU 04
EA 0120F1

BRIDGE NO. 34-0006L/R
KILOMETER POST 13.2/13.9

SAN FRANCISCO OAKLAND BAY BRIDGE
EAST SPAN SEISMIC SAFETY PROJECT
SELF-ANCHORED SUSPENSION BRIDGE (SUPERSTRUCTURE & TOWER)
PIER E2 DETAILS NO. 2

Rev. Date: 5-18-98

ORIGINAL SCALE IN MILLIMETERS FOR REDUCED PLANS 0 10 20 30 40 50 60 70 80 90 100

DISREGARD PRINTS BEARING EARLIER REVISION DATES

REVISION DATES (PRELIMINARY STAGE ONLY)										SHEET	OF
03/02/99	05/31/01	04/08/02	01/07/02	12/19/02	05/16/03					94RI	

FILE => I:\bb\04-01200I\sas\contract plans and oco\oco\co#23\update 12-21-07\dgn\aeplr02e-rl.dgn

NOTES:

1. For Sections F-F and G-G, see "Pier E2 Details No.4" sheet. For Section H-H, see "Pier E2 Details No.7" sheet. ⚠1
2. No splices permitted in region (1). Splicing within region (2) shall be staggered and not more than 50% at one section.
3. Cross beam reinforcement similar about ℄ Bridge.
4. Alternate 90° and 135° seismic hook horizontally and vertically. Hook shall engage horizontal bars. ⚠1
5. Column hoops shall follow the 2% slope inside the capbeam. ⚠1
6. PT, Bearing and Shear key hardware not shown for clarity.
7. For additional notes, see "Pier E2 Details No.4" sheet.
8. At the locations of bearings and midspan shear keys, Contractor may replace ties with equivalent headed bars.
9. Reinforcement placement support bars required (not shown), Typical.
10. Longitudinal crossbeam, reinforcement shall be placed so as to avoid pier reinforcement & anchor bolts.

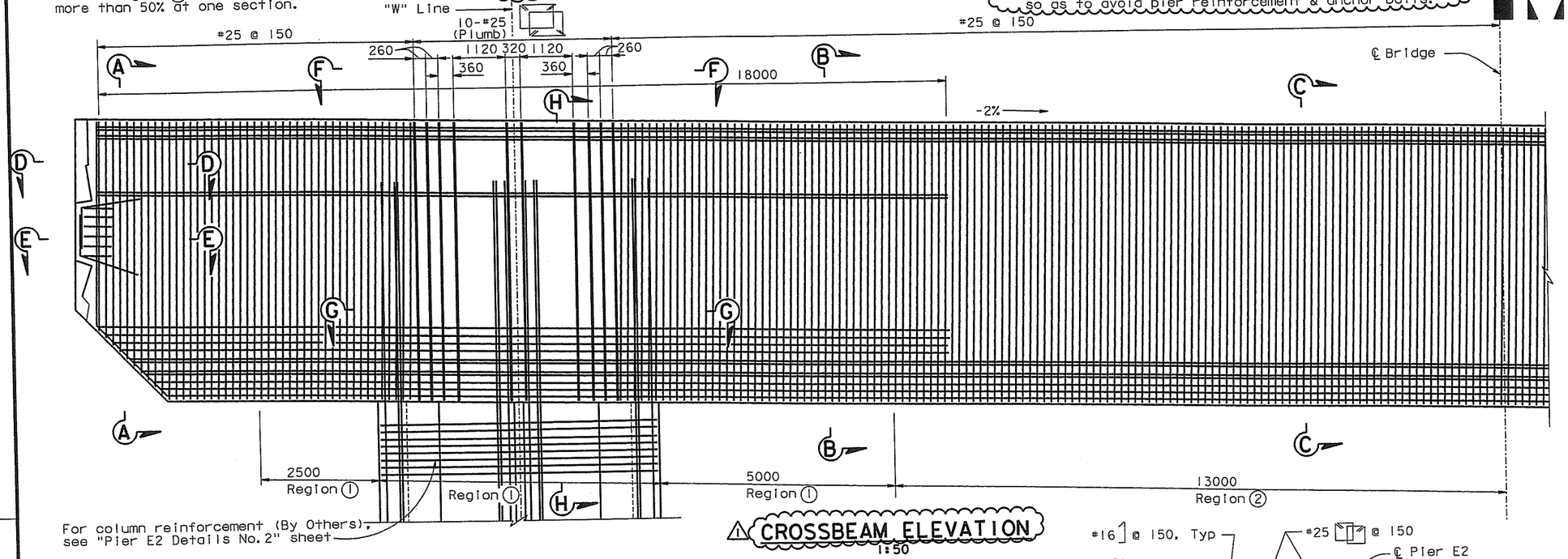

For column reinforcement (By Others), see "Pier E2 Details No.2" sheet

⚠ CROSSBEAM ELEVATION
1:50

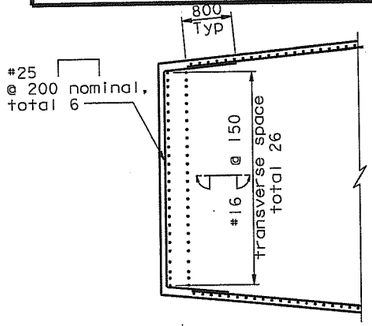

⚠ SECTION E-E
1:50

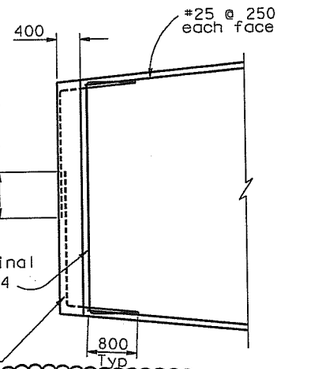

⚠ SECTION D-D (At block-out)
1:50
(Not all reinforcement shown for clarity)

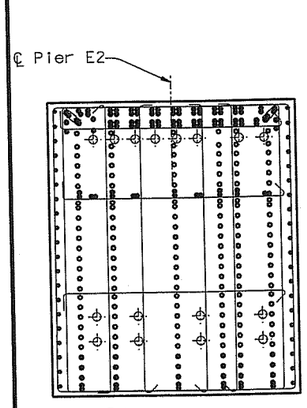

⚠ SECTION A-A
1:50

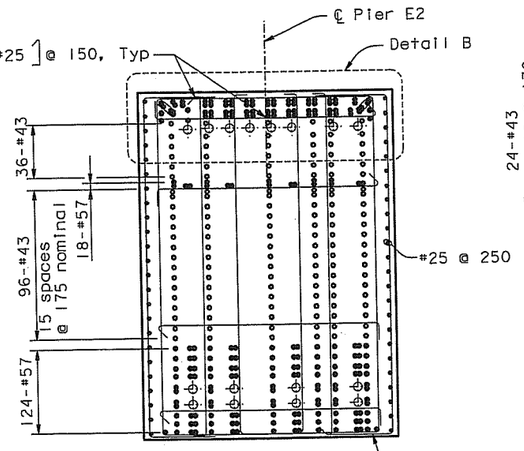

⚠ SECTION B-B
1:50

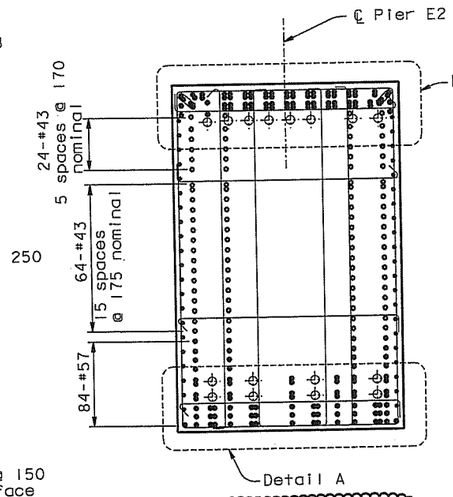

⚠ SECTION C-C
1:50

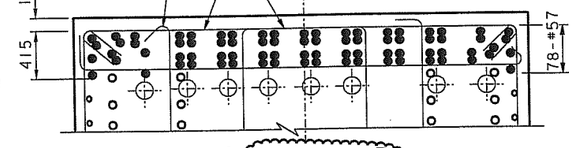

⚠ DETAIL B
1:25

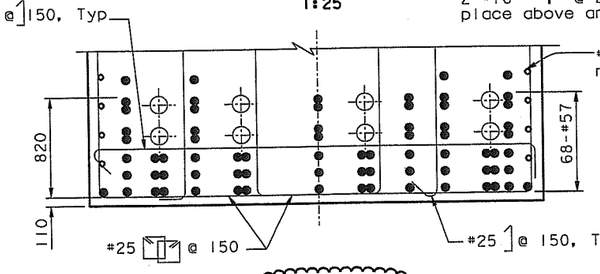

⚠ DETAIL A
1:25

ALL DIMENSIONS ARE IN MILLIMETERS UNLESS OTHERWISE SHOWN

LEGEND:
- ● #57 Bar
- ○ #43 Bar
- ◦ #25 Bar

⚠

DIST.	COUNTY	ROUTE	KILOMETER POST TOTAL PROJECT	SHEET NO.	TOTAL SHEETS
04	SF	80	13.2/13.9	512R1	1204

REGISTERED ENGINEER - CIVIL

12-6-04
PLANS APPROVAL DATE

REGISTERED PROFESSIONAL ENGINEER — Alex E. Sanjines — No. C 051153 — Exp. 9/30/07 — CIVIL — STATE OF CALIFORNIA

The State of California or its officers or agents shall not be responsible for the accuracy or completeness of electronic copies of this plan sheet.

T.Y. LIN / MOFFATT & NICHOL
825 BATTERY STREET
SAN FRANCISCO, CA 94111

Caltrans now has a web site! To get to the web site, go to: http://www.dot.ca.gov

Caltrans Metric

100 % PS&E

USERNAME => vignatov\DATE PLOTTED => 10 MAY 2007 TIME PLOTTED => 11:17:54

R. Vallzadeh/V. Toan/Y.L./W.L./F.C.
DESIGN OVERSIGHT
SIGN OFF DATE 07/21/06
Rev. Date: 5-18-98

MARK	DATE	REVISIONS	BY	CH'D	CCO#
1	07/21/06	E2 CAP BEAM ISD	AS	NV	23

CONTRACT CHANGE ORDER NO. 23
SHEET 90 OF 102

	BY	CHECKED
DESIGN	A. Sanjines	J. Chan
DETAILS	R. Xu	J. Chan
QUANTITIES	C. Bernardo	B. Mason

PREPARED FOR THE STATE OF CALIFORNIA DEPARTMENT OF TRANSPORTATION

R. Manzanarez
PROJECT ENGINEER

CU 04
EA 0120F1

BRIDGE NO. 34-0006L/R
KILOMETER POST 13.2/13.9

DISREGARD PRINTS BEARING EARLIER REVISION DATES

REVISION DATES (PRELIMINARY STAGE ONLY): 05/30/99 | 05/31/01 | 04/30/02 | 07/01/02 | 12/18/02 | 05/16/03

SHEET 95R1 OF

ORIGINAL SCALE IN MILLIMETERS FOR REDUCED PLANS 0 10 20 30 40 50 60 70 80 90 100

FILE => I:\bb\04-012001\sas\contract plans and cco\cco\cco#23\aeplr03e-r1.dgn

SAN FRANCISCO OAKLAND BAY BRIDGE
EAST SPAN SEISMIC SAFETY PROJECT
SELF-ANCHORED SUSPENSION BRIDGE
(SUPERSTRUCTURE & TOWER)

PIER E2 DETAILS NO. 3

DIST.	COUNTY	ROUTE	KILOMETER POST TOTAL PROJECT	SHEET NO.	TOTAL SHEETS
04	SF	80	13.2/13.9	513R1	1204

Caltrans Metric

REGISTERED ENGINEER - CIVIL

12-6-04

PLANS APPROVAL DATE

REGISTERED PROFESSIONAL ENGINEER Alex E. Sanjines No. C 051153 Exp. 9/30/07 CIVIL STATE OF CALIFORNIA

The State of California or its officers or agents shall not be responsible for the accuracy or completeness of electronic copies of this plan sheet.

T.Y. LIN / MOFFATT & NICHOL
825 BATTERY STREET
SAN FRANCISCO, CA 94111

Caltrans now has a web site! To get to the web site, go to: http://www.dot.ca.gov

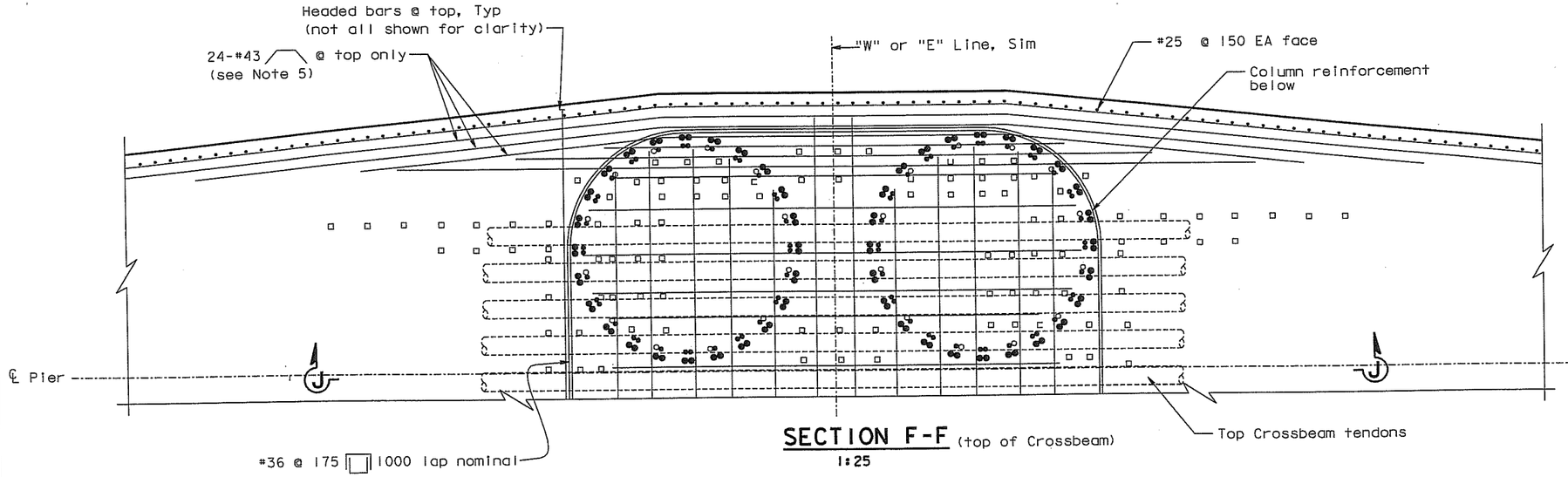

SECTION F-F (top of Crossbeam)

1:25

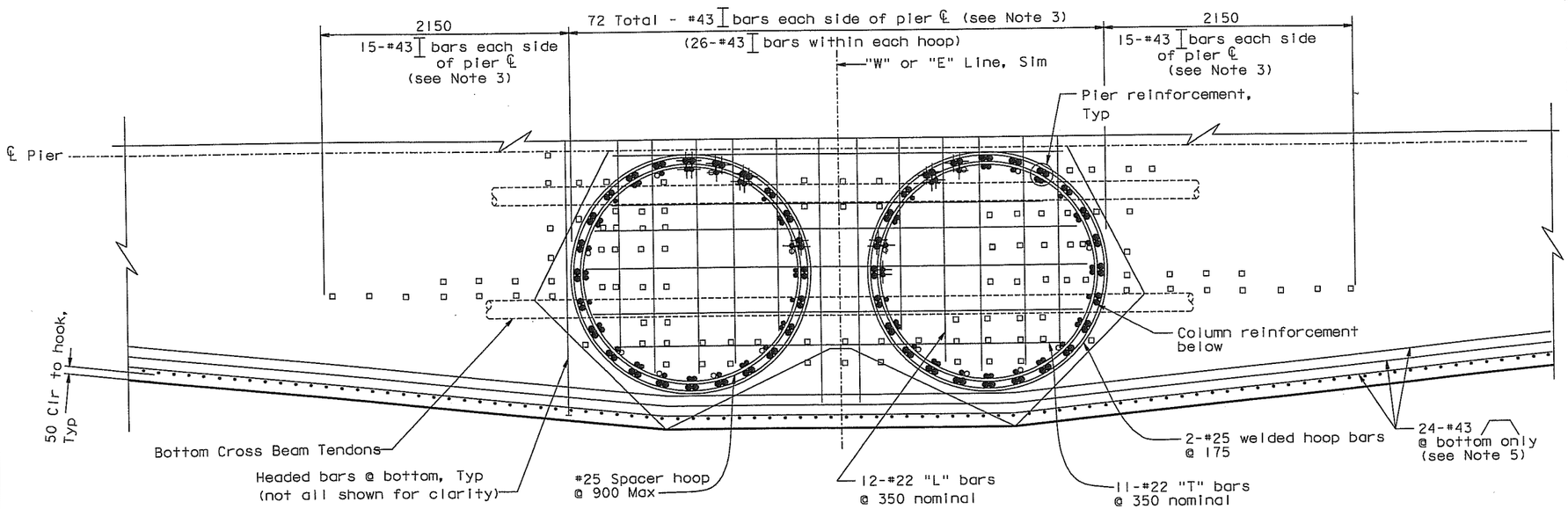

SECTION G-G (Crossbeam soffit)

1:25

LEGEND

□ - Indicates Welded Headed bar (see Note 4)

NOTES:

1. Not all reinforcement shown for clarity.
2. Adjust reinforcement as required to clear column reinforcement.
3. Adjust vertical headed bars within hoops to clear prestressing and main longitudinal reinforcement. Vertical reinforcement may be terminated subject to approval by the Engineer.
4. Headed reinforcement may consist of rebar with either friction welded plates or threaded heads. Threaded heads must equal or exceed the capacity of welded plates.
5. Cut off #43 top and bottom longitudinal bars at widened beam to avoid main Crossbeam longitudinal reinforcement as required.
6. Reinforcement details reflect strict adherence to the location of pier column reinforcement defined on "Pier E2 details No.2" sheet.
7. Adequate fabrication and placement of all permanently embedded items may require more stringent tolerances than ordinary industry standards. It shall be the Contractor's responsibility to ensure the adequate fabrication and placement of all permanently embedded items within the geometric constraints of the plans.
8. For anchor rod layouts and details for bearings and shear keys, see "Pier E2 details No.9" sheet.
9. For Section J-J see "Pier E2 Details No.7" sheet.

Original Sheet Superseded

MARK	DATE	DESCRIPTIONS	BY	CH'D	CCO#
1	07/21/06	E2 CAP BEAM ISD	AS	NV	23

REVISIONS

CONTRACT CHANGE ORDER NO. 23
SHEET 91 OF 102

100 % PS&E

ALL DIMENSIONS ARE IN MILLIMETERS UNLESS OTHERWISE SHOWN

SAN FRANCISCO OAKLAND BAY BRIDGE
EAST SPAN SEISMIC SAFETY PROJECT
SELF-ANCHORED SUSPENSION BRIDGE
(SUPERSTRUCTURE & TOWER)

PIER E2 DETAILS NO. 4

R. Valizadeh/V. Toan/Y.L./W.L./F.C.
DESIGN OVERSIGHT
Roger Valizadeh / Vana Toan / Y. Liu
SIGN OFF DATE 07/21/06

	BY	CHECKED
DESIGN	A. Sanjines	J. Chan
DETAILS	R. Xu	J. Chan
QUANTITIES	C. Bernardo	B. Mason

PREPARED FOR THE STATE OF CALIFORNIA DEPARTMENT OF TRANSPORTATION

R. Manzanarez
PROJECT ENGINEER

BRIDGE NO. 34-0006L/R
KILOMETER POST 13.2/13.9

CU 04
EA 0120F1

DISREGARD PRINTS BEARING EARLIER REVISION DATES

REVISION DATES (PRELIMINARY STAGE ONLY) 08/02/99 05/31/01 04/08/02 07/01/02 12/19/02

SHEET 96R1 OF

Rev. Date: 5-18-98

ORIGINAL SCALE IN MILLIMETERS FOR REDUCED PLANS 0 10 20 30 40 50 60 70 80 90 100

FILE => I:\bb\04-012001\sas\contract plans and cco\cco\cco#23\dgn\aep1r10.dgn

USERNAME => ptam DATE PLOTTED => 07 JUN 2007 TIME PLOTTED => 15:08:49

DIST.	COUNTY	ROUTE	KILOMETER POST TOTAL PROJECT	SHEET NO.	TOTAL SHEETS
04	SF	80	13.2/13.9	514RI	1204

Caltrans Metric

REGISTERED ENGINEER - CIVIL

12-6-04
PLANS APPROVAL DATE

REGISTERED PROFESSIONAL ENGINEER — Alex E. Sanjines — No. C 051153 — Exp. 9/30/07 — CIVIL — STATE OF CALIFORNIA

The State of California or its officers or agents shall not be responsible for the accuracy or completeness of electronic copies of this plan sheet.

T.Y. LIN / MOFFATT & NICHOL
825 BATTERY STREET
SAN FRANCISCO, CA 94111

Caltrans now has a web site! To get to the web site, go to: http://www.dot.ca.gov

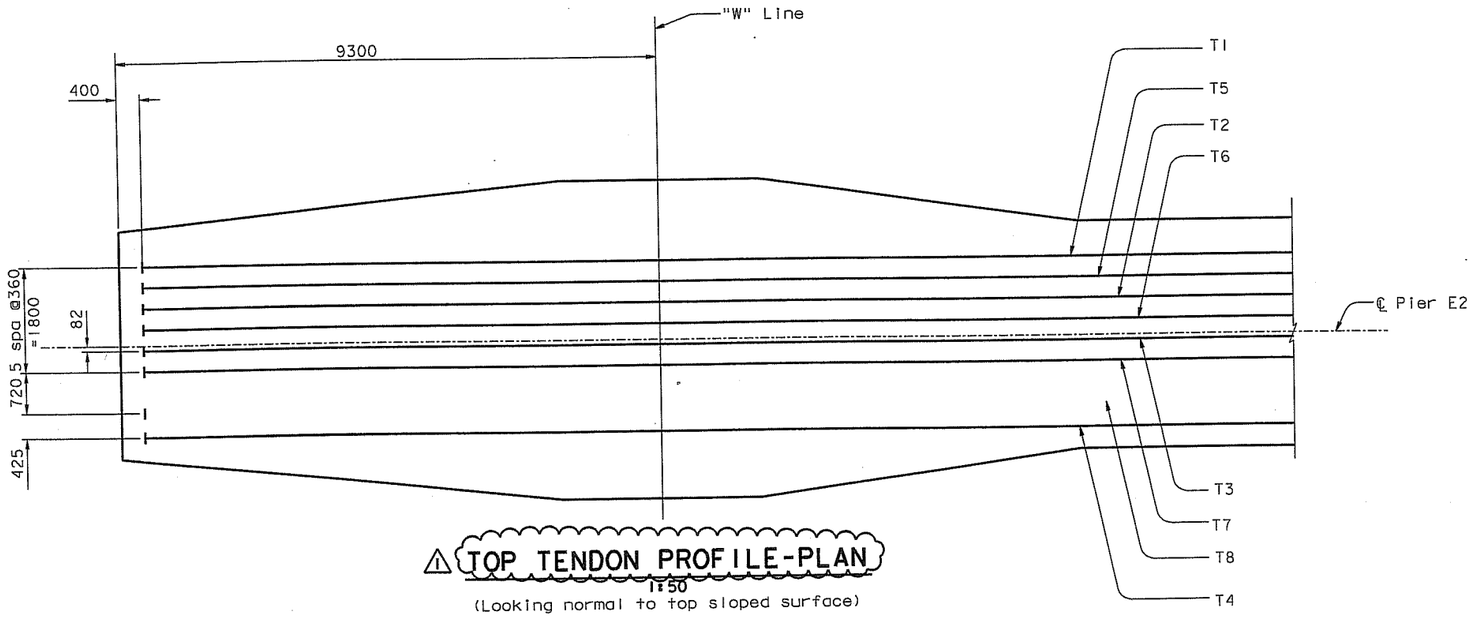

⚠1 TOP TENDON PROFILE-PLAN
1:50
(Looking normal to top sloped surface)

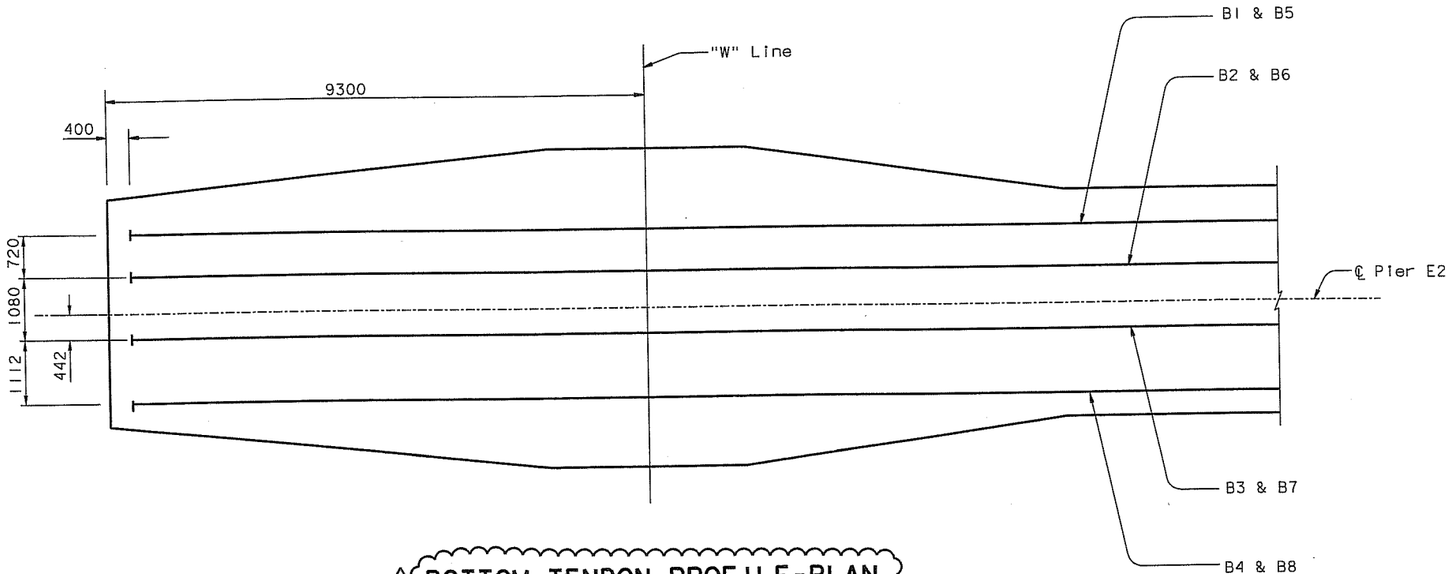

⚠1 BOTTOM TENDON PROFILE-PLAN
1:50
(Looking normal to top sloped surface)

MARK	DATE	DESCRIPTIONS	BY	CH'D	CCO#
		REVISIONS			
⚠1	07/21/06	E2 CAP BEAM ISD	AS	NV	23

CONTRACT CHANGE ORDER NO. 23
SHEET 92 OF 102

NOTES:

1. "W" Line shown, "E" Line similar.
2. For tendon anchorage block-out details, see "Pier E2 Details No.8" sheet.
3. For concrete crossbeam reinforcement, see "Pier E2 Details No.3", "Pier E2 Details No.4", and "Pier E2 Details No.7" sheets. ⚠1
4. For stressing force, use two end stressing and initial jacking stress = $0.75\ f_{pu} = 0.75 \times 1860 = 1390$ MPa.
5. For additional prestressing notes, see Prestressing Notes" sheet.
6. The post-tensioning and grouting sequence shall prevent ducts from crushing.
7. ⚠1 The outer diameter of the PT duct shall not be greater than 180 mm.

100 % PS&E

TIME PLOTTED => 11:20:20
DATE PLOTTED => 10 MAY 2007
USERNAME => vignatovs

ALL DIMENSIONS ARE IN MILLIMETERS UNLESS OTHERWISE SHOWN

SAN FRANCISCO OAKLAND BAY BRIDGE
EAST SPAN SEISMIC SAFETY PROJECT
SELF-ANCHORED SUSPENSION BRIDGE
(SUPERSTRUCTURE & TOWER)

PIER E2 DETAILS NO.5

	BY	CHECKED
DESIGN	A. Sanjines	J. Chan
DETAILS	R. Xu	J. Chan
QUANTITIES	C. Bernardo	B. Mason

PREPARED FOR THE STATE OF CALIFORNIA
DEPARTMENT OF TRANSPORTATION

R. Manzanarez
PROJECT ENGINEER

BRIDGE NO. 34-0006L/R
KILOMETER POST 13.2/13.9

R. Vaziazadeh/V. Toan/Y.L./W.L./F.C.
DESIGN OVERSIGHT
SIGN OFF DATE 07/21/06

Rev. Date: 5-18-98

ORIGINAL SCALE IN MILLIMETERS FOR REDUCED PLANS 0 10 20 30 40 50 60 70 80 90 100

CU 04
EA 0120F1

DISREGARD PRINTS BEARING EARLIER REVISION DATES → 08/07/99 | 05/31/01 | 04/08/02 | 07/01/02 | 12/19/02

SHEET 97RI OF

FILE => I:\bb\04-0120F1\sas\contract plans and cco\cco\cco#23\depir05e.dgn

DIST.	COUNTY	ROUTE	KILOMETER POST TOTAL PROJECT	SHEET NO.	TOTAL SHEETS
04	SF	80	13.2/13.9	515R1	1204

Caltrans Metric

REGISTERED ENGINEER - CIVIL

12-6-04

PLANS APPROVAL DATE

REGISTERED PROFESSIONAL ENGINEER Alex E. Sanjines No. C 051153 Exp. 9/30/07 CIVIL STATE OF CALIFORNIA

The State of California or its officers or agents shall not be responsible for the accuracy or completeness of electronic copies of this plan sheet.

T.Y. LIN / MOFFATT & NICHOL
825 BATTERY STREET
SAN FRANCISCO, CA 94111

Caltrans now has a web site! To get to the web site, go to: http://www.dot.ca.gov

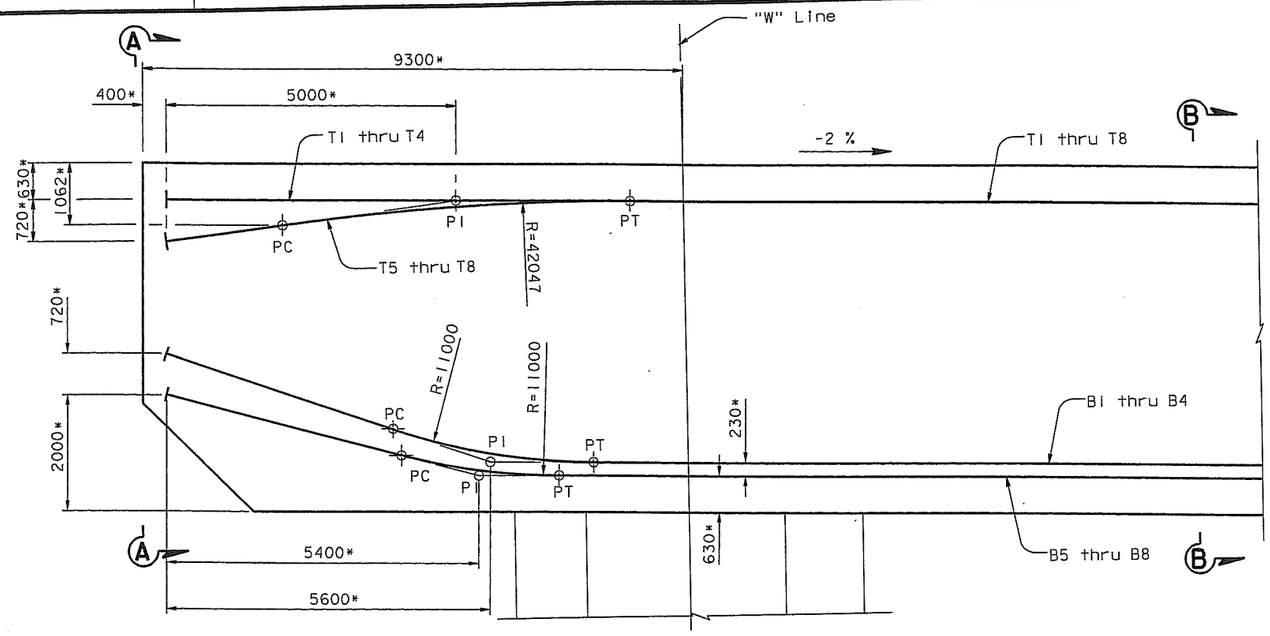

TOP AND BOTTOM TENDON PROFILE-ELEVATION

1:50

* Dimensions are nominal and parallel to sloped cap beam surface

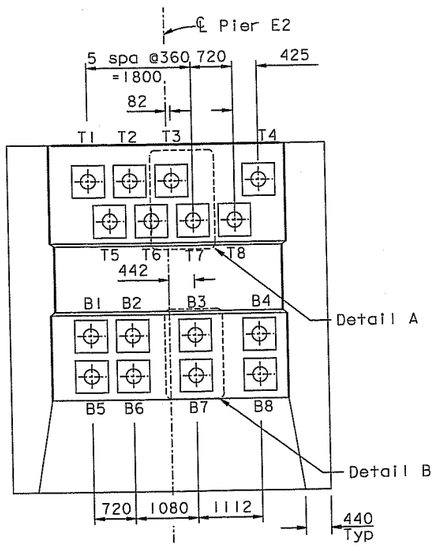

SECTION A-A

1:50

(reinforcement is not shown for clarity)

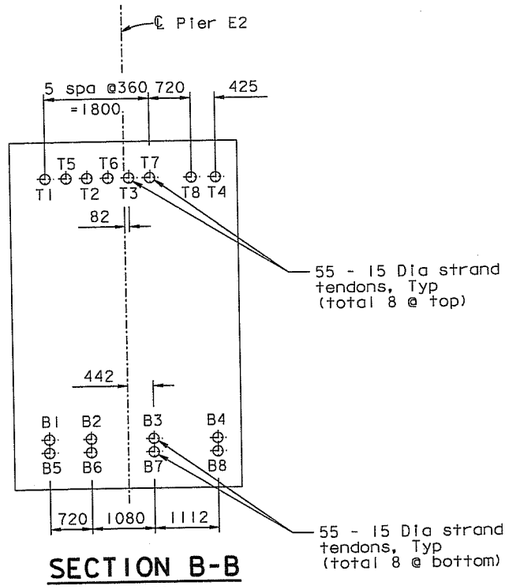

SECTION B-B

1:50

(reinforcement is not shown for clarity)

Original Sheet Superseded

MARK	DATE	DESCRIPTIONS	BY	CH'D	CCO#
1	07/21/06	E2 CAP BEAM ISD	AS	NV	23

REVISIONS

CONTRACT CHANGE ORDER NO. 23
SHEET 93 OF 102

NOTES:

1. "W" Line shown, "E" Line similar.

ALL DIMENSIONS ARE IN MILLIMETERS UNLESS OTHERWISE SHOWN

SAN FRANCISCO OAKLAND BAY BRIDGE
EAST SPAN SEISMIC SAFETY PROJECT
SELF-ANCHORED SUSPENSION BRIDGE
(SUPERSTRUCTURE & TOWER)

PIER E2 DETAILS NO. 6

R. Valizadeh/V. Toan/Y.L./W.L./F.C.
DESIGN OVERSIGHT
Roza Valizadeh / Vana Toan / Y. Liu
SIGN OFF DATE 07/21/06

	BY	CHECKED
DESIGN	A. Sanjines	J. Chan
DETAILS	R. Xu	J. Chan
QUANTITIES	C. Bernardo	B. Mason

PREPARED FOR THE STATE OF CALIFORNIA DEPARTMENT OF TRANSPORTATION

R. Manzanarez
PROJECT ENGINEER

BRIDGE NO. 34-0006L/R
KILOMETER POST 13.2/13.9

CU 04
EA 0120F1

DISREGARD PRINTS BEARING EARLIER REVISION DATES

REVISION DATES (PRELIMINARY STAGE ONLY) 08/02/99 05/31/01 04/08/02 07/01/02 12/19/02 05/16/03 12/07/05

SHEET 98R1 OF

ORIGINAL SCALE IN MILLIMETERS FOR REDUCED PLANS 0 10 20 30 40 50 60 70 80 90 100

Rev. Date: 5-18-98

FILE => I:\bb\04-012001\sas\contract plans and cco\cco\cco#23\dgn\aepir09-r1.dgn

100 % PS&E

USERNAME => ptom DATE PLOTTED => 07 JUN 2007 TIME PLOTTED => 15:09:59

DIST.	COUNTY	ROUTE	KILOMETER POST TOTAL PROJECT	SHEET NO.	TOTAL SHEETS
04	SF	80	13.2/13.9	516RI	1204

REGISTERED ENGINEER - CIVIL

12-6-04
PLANS APPROVAL DATE

REGISTERED PROFESSIONAL ENGINEER — Alex E. Sanjines — No. C 051153 — Exp. 9/30/07 — CIVIL — STATE OF CALIFORNIA

The State of California or its officers or agents shall not be responsible for the accuracy or completeness of electronic copies of this plan sheet.

T.Y. LIN / MOFFATT & NICHOL
825 BATTERY STREET
SAN FRANCISCO, CA 94111

Caltrans now has a web site! To get to the web site, go to: http://www.dot.ca.gov

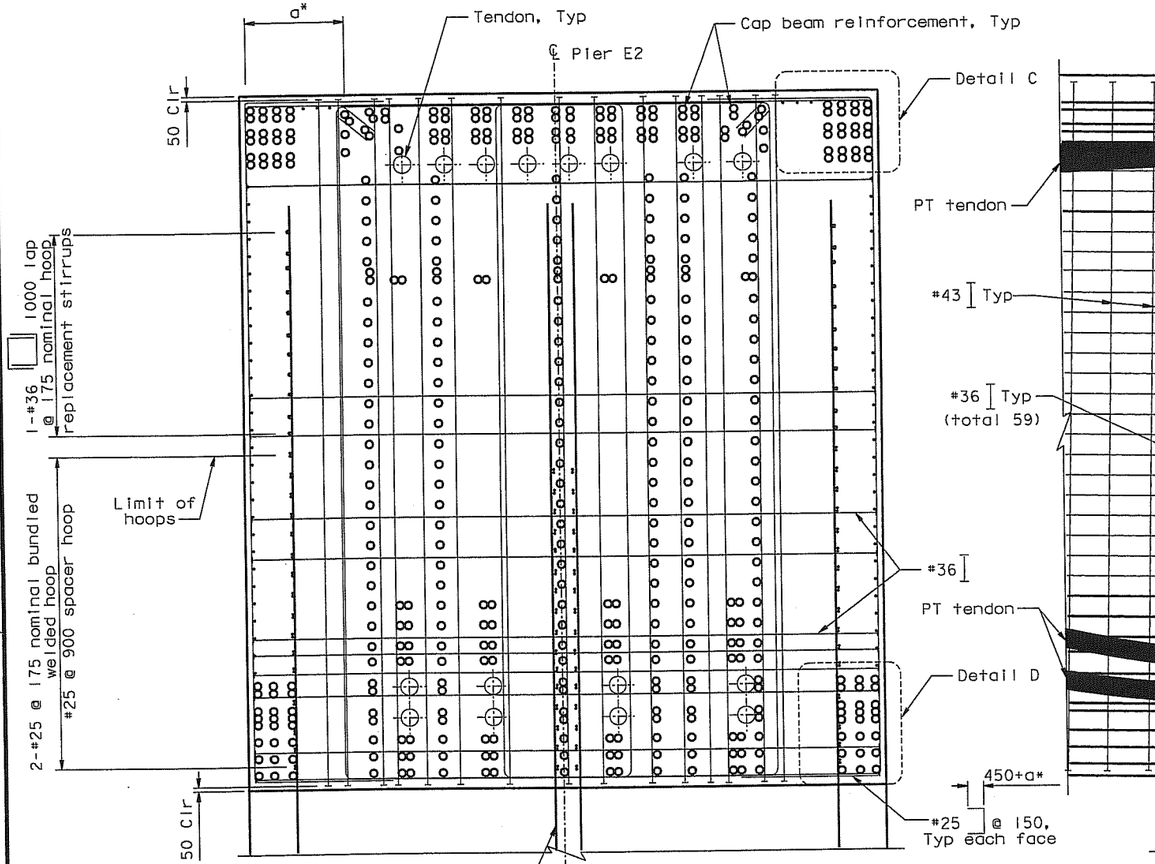

* a - dimension varies with location on widened beam

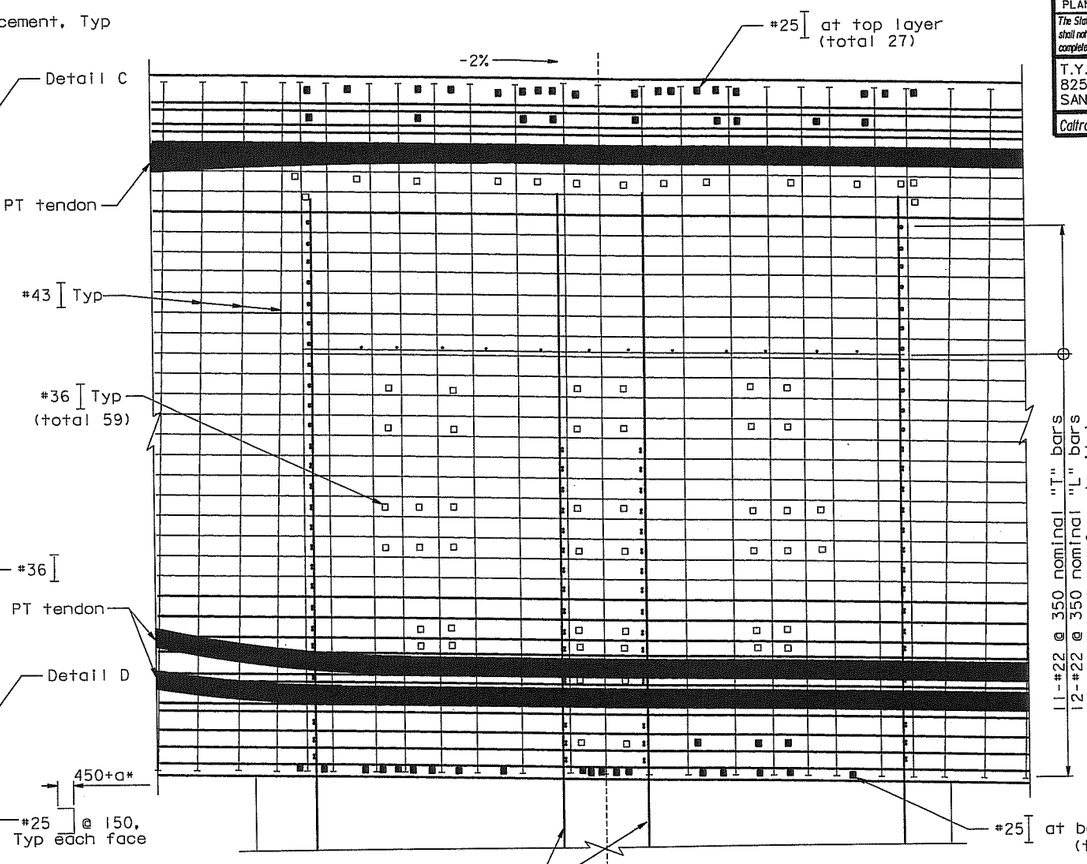

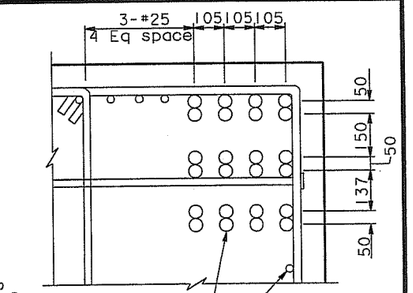

DETAIL C
1:10

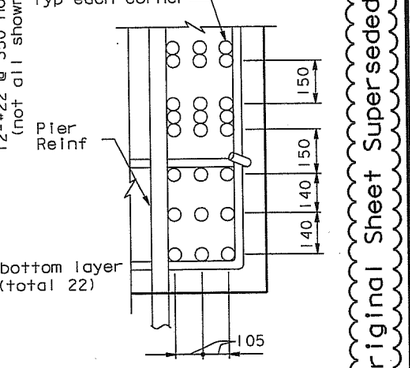

DETAIL D
1:10

SECTION H-H
1:25
(Not all rebars shown for clarity)

SECTION J-J
1:25
(Not all rebars shown for clarity)

NOTES:

1. Adjust reinforcement as required to clear column reinforcement. Bars can be moved and bundled to adjacent bars that clear column reinforcement.
2. For additional notes, see "Pier E2 Details No. 3" and "Pier E2 Details No. 4".

LEGEND
- #43 Headed bar
- #36 Headed bar
- #25 Headed bar

ALL DIMENSIONS ARE IN MILLIMETERS UNLESS OTHERWISE SHOWN

MARK	DATE	DESCRIPTIONS	BY	CH'D	CCO#
1	07/21/06	E2 CAP BEAM ISD	AS	NV	23
		REVISIONS			

CONTRACT CHANGE ORDER NO. 23
SHEET 94 OF 102

Original Sheet Superseded

100 % PS&E

DATE PLOTTED => 07 JUN 2007 TIME PLOTTED => 15:11:32

USERNAME => ptom

R. Valizadeh/V. Toan/Y.L./W.L./F.C.
DESIGN OVERSIGHT
SIGN OFF DATE 07/21/06

Rev. Date: 5-18-98

	BY	CHECKED
DESIGN	A. Sanjines	J. Chan
DETAILS	R. Xu	J. Chan
QUANTITIES	C. Bernardo	B. Mason

ORIGINAL SCALE IN MILLIMETERS FOR REDUCED PLANS 0 10 20 30 40 50 60 70 80 90 100

PREPARED FOR THE STATE OF CALIFORNIA DEPARTMENT OF TRANSPORTATION

R. Manzanarez
PROJECT ENGINEER

CU 04
EA 0120F1

BRIDGE NO. 34-0006L/R
KILOMETER POST 13.2/13.9

DISREGARD PRINTS BEARING EARLIER REVISION DATES

REVISION DATES (PRELIMINARY STAGE ONLY)								SHEET	OF
08/07/98	05/31/01	04/08/02	07/01/02	12/19/02	05/16/03			99RI	

FILE => I:\bb\04-0120F1\sas\contract plans and cco\cco#23\dgn\aep1r04e-r1.dgn

SAN FRANCISCO OAKLAND BAY BRIDGE
EAST SPAN SEISMIC SAFETY PROJECT
SELF-ANCHORED SUSPENSION BRIDGE
(SUPERSTRUCTURE & TOWER)

PIER E2 DETAILS NO. 7

DIST.	COUNTY	ROUTE	KILOMETER POST TOTAL PROJECT	SHEET NO.	TOTAL SHEETS
04	SF	80	13.2/13.9	517RI	1204

REGISTERED ENGINEER - CIVIL

12-6-04
PLANS APPROVAL DATE

Alex E. Sanjines, No. C 051153, Exp. 9/30/07, CIVIL, REGISTERED PROFESSIONAL ENGINEER, STATE OF CALIFORNIA

The State of California or its officers or agents shall not be responsible for the accuracy or completeness of electronic copies of this plan sheet.

T.Y. LIN / MOFFATT & NICHOL
825 BATTERY STREET
SAN FRANCISCO, CA 94111

Caltrans now has a web site! To get to the web site, go to: http://www.dot.ca.gov

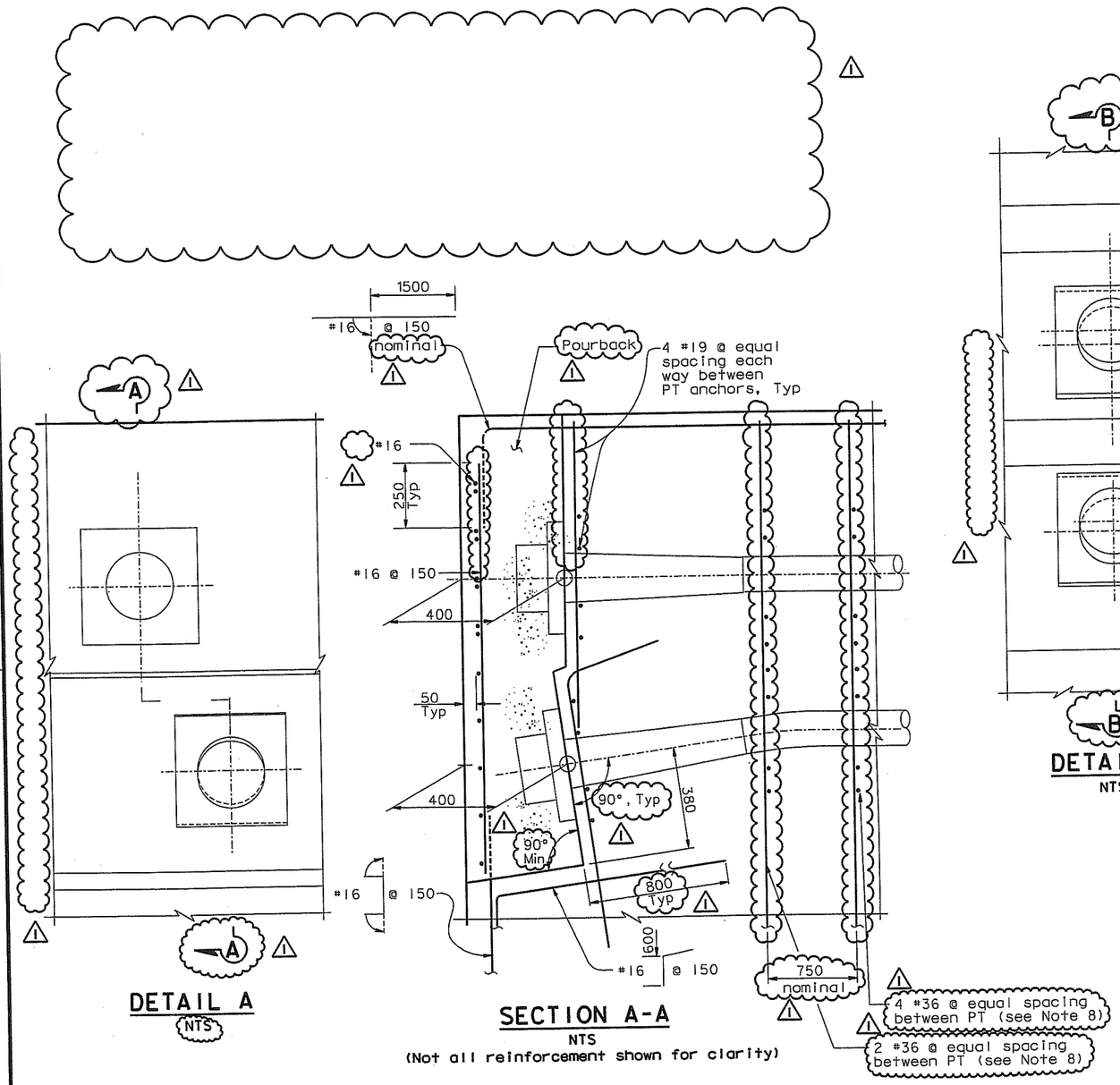

DETAIL A
NTS

SECTION A-A
NTS
(Not all reinforcement shown for clarity)

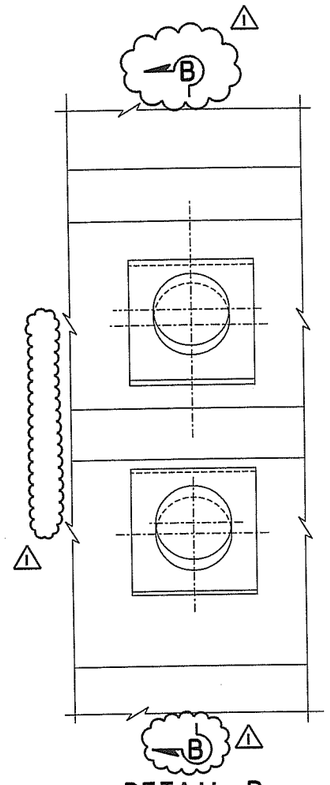

DETAIL B
NTS

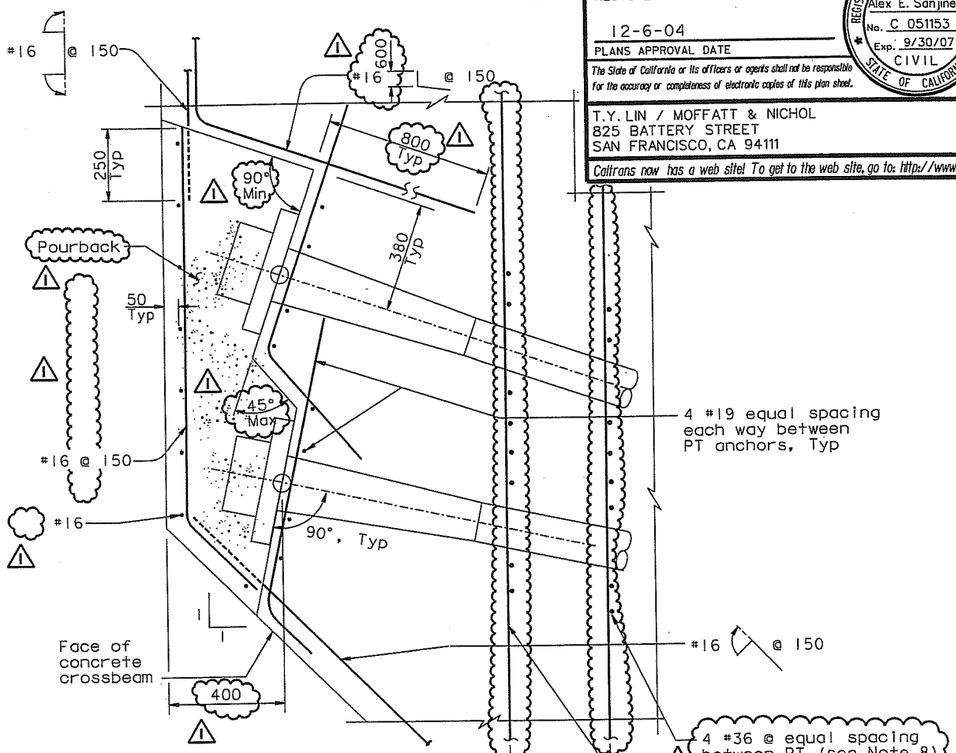

SECTION B-B
NTS
(Not all reinforcement shown for clarity)

NOTES:

1. For PT tendon plans and crossbeam elevation, see "Pier E2 Details No.5" sheet.
2. For pier E2 column elevation, see "Pier E2 Details No.2" sheet.
3. All PT tendons are (55) 15 Dia.
4. ~~Local confining reinforcement (not shown for clarity)~~ per tendon anchor shall be provided by PT hardware supplier.
5. For additional prestressing details, see "Prestressing Notes" sheet.
6. Block-out geometry reflects standard post-tensioning industry requirements. Actual post-tensioning system dimensions may vary; final block-out geometry shall be reviewed and approved by the Engineer.
7. Post-tensioning anchorage details reflect industry standard geometry. Actual dimensions may vary depending on supplier. It shall be Contractor's responsibility to accomodate the actual system to plan geometry.
8. Contractor may vary spacing and size to clear other reinforcement, such that the equivalent steel is provided.

MARK	DATE	DESCRIPTIONS	BY	CH'D	CCO#
1	07/21/06	E2 CAP BEAM ISD	AS	NV	23
		REVISIONS			

CONTRACT CHANGE ORDER NO. 23
SHEET 95 OF 102

ALL DIMENSIONS ARE IN MILLIMETERS UNLESS OTHERWISE SHOWN

SAN FRANCISCO OAKLAND BAY BRIDGE EAST SPAN SEISMIC SAFETY PROJECT
SELF-ANCHORED SUSPENSION BRIDGE (SUPERSTRUCTURE & TOWER)
PIER E2 DETAILS NO. 8

R. Vallzadeh/V. Toan/Y.L./W.L./F.C.
DESIGN OVERSIGHT
SIGN OFF DATE 07/21/06

	BY	CHECKED
DESIGN	A. Sanjines	J. Chan
DETAILS	R. Xu	J. Chan
QUANTITIES	C. Bernardo	B. Mason

PREPARED FOR THE STATE OF CALIFORNIA DEPARTMENT OF TRANSPORTATION

R. Manzanarez
PROJECT ENGINEER

BRIDGE NO. 34-0006L/R
KILOMETER POST 13.2/13.9

CU 04
EA 0120F1

DISREGARD PRINTS BEARING EARLIER REVISION DATES

REVISION DATES (PRELIMINARY STAGE ONLY): 05/27/01, 04/26/02, 07/29/02, 12/19/02

SHEET 100RI OF

ORIGINAL SCALE IN MILLIMETERS FOR REDUCED PLANS 0 10 20 30 40 50 60 70 80 90 100

Rev. Date: 5-18-98

FILE => I:\bb\04-0120I\sas\contract plans and cco\cco#23\dgn\aep1r06e.dgn

USERNAME => ptom
DATE PLOTTED => 07 JUN 2007
TIME PLOTTED => 15:12:41
100 % PS&E

DIST.	COUNTY	ROUTE	KILOMETER POST TOTAL PROJECT	SHEET NO.	TOTAL SHEETS
04	SF	80	13.2/13.9	519RI	1204

REGISTERED ENGINEER - CIVIL

12-6-04
PLANS APPROVAL DATE

REGISTERED PROFESSIONAL ENGINEER
Alex E. Sanjines
No. C 051153
Exp. 9/30/07
CIVIL
STATE OF CALIFORNIA

The State of California or its officers or agents shall not be responsible for the accuracy or completeness of electronic copies of this plan sheet.

T.Y. LIN / MOFFATT & NICHOL
825 BATTERY STREET
SAN FRANCISCO, CA 94111

Caltrans now has a web site! To get to the web site, go to: http://www.dot.ca.gov

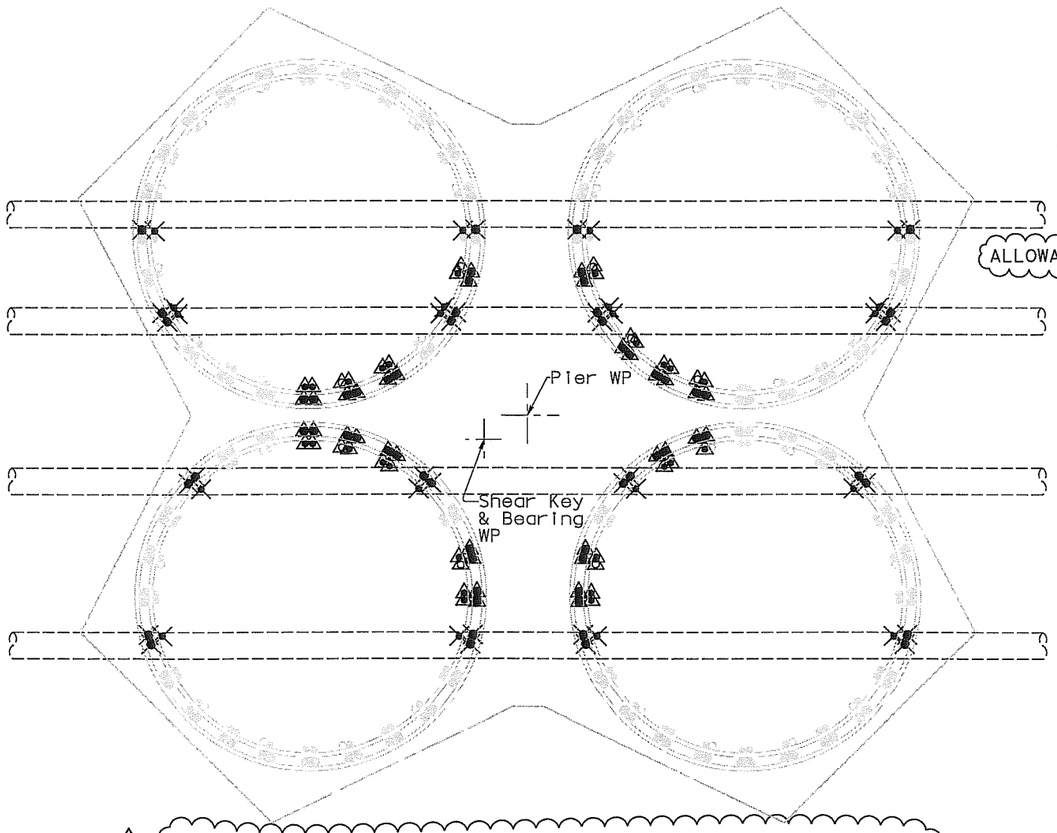

⚠ CUTOFF ALLOWANCE FOR COLUMN REINFORCEMENT

NTS

(Allowance shown is theoretical and is for information only. Not for construction). (see Note 2 thru 4)

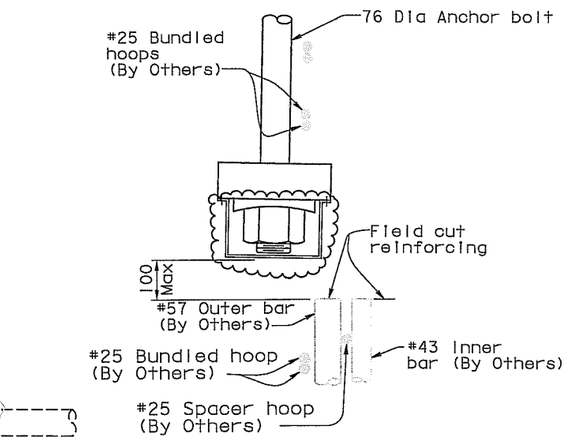

⚠ ALLOWANCE FOR ANCHOR BOLT AND ANCHOR PLATE

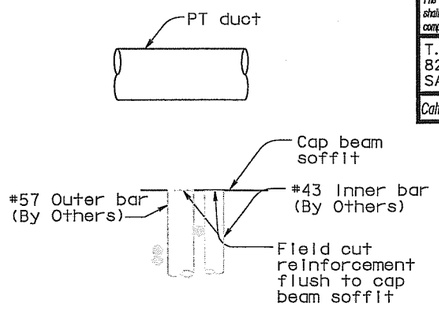

⚠ ALLOWANCE FOR PT DUCT

FIELD CUT DETAIL

NTS
(see Notes 2 thru 4) ⚠

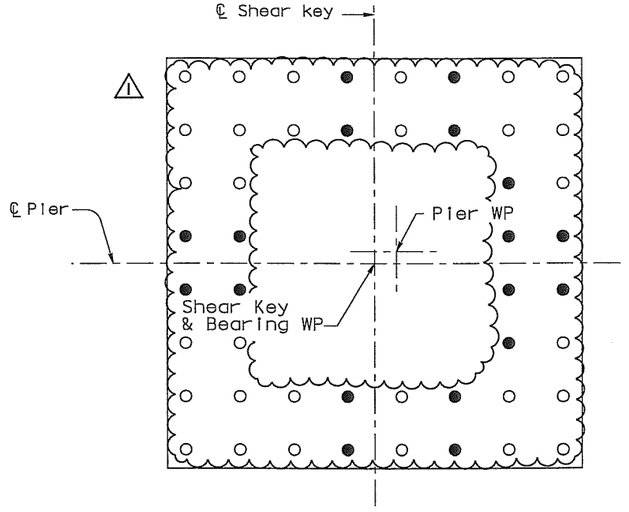

SECTION C-C (Anchor bolt length layout)

1:20

LEGEND:

- o Anchor bolts length = L1
- • Anchor bolts length = L2
- ⚠ × Indicates #43 or #57 column reinforcement may be field cut below the ducts. See "Allowance for PT duct".
- ⚠ △ Indicates #43 or #57 column reinforcement may be field cut below the anchor bolt or anchor PL. See "Allowance for anchor bolt and anchor plate".

NOTES:

1. Local confining spiral reinforcement for bearing HS bolts shall be provided by hardware suppliers; not shown for clarity.
2. ⚠ Rotate anchor plates as necessary to clear column reinforcement.
3. Contractor may field cut existing column reinforcement marked with X or △ to clear PT ducts and shear key anchor bolt/anchor plate. See Field Cut Detail.
4. Prior to cutting any column reinforcement, the Contractor is required to submit locations and number of bars to be field cut for Engineer's review and approval.

100 % PS&E

MARK	DATE	DESCRIPTIONS	BY	CH'D	CCO#
		REVISIONS			
⚠1	07/21/06	E2 CAP BEAM ISD	AS	NV	23

CONTRACT CHANGE ORDER NO. 23
SHEET 96 OF 102

ALL DIMENSIONS ARE IN MILLIMETERS UNLESS OTHERWISE SHOWN

R. Valizadeh/V. Toan/Y. L./W. L./F. C.
DESIGN OVERSIGHT
SIGN OFF DATE 07/21/06

	BY	CHECKED
DESIGN	A. Sanjines	J. Chan
DETAILS	R. Xu	J. Chan
QUANTITIES	C. Bernardo	B. Mason

PREPARED FOR THE STATE OF CALIFORNIA
DEPARTMENT OF TRANSPORTATION

R. Manzanarez
PROJECT ENGINEER

BRIDGE NO. 34-0006L/R
KILOMETER POST 13.2/13.9

SAN FRANCISCO OAKLAND BAY BRIDGE
EAST SPAN SEISMIC SAFETY PROJECT
SELF-ANCHORED SUSPENSION BRIDGE
(SUPERSTRUCTURE & TOWER)

PIER E2 DETAILS NO. 10

Rev. Date: 5-18-98

ORIGINAL SCALE IN MILLIMETERS FOR REDUCED PLANS 0 10 20 30 40 50 60 70 80 90 100

CU 04
EA 0120F1

DISREGARD PRINTS BEARING EARLIER REVISION DATES →

REVISION DATES (PRELIMINARY STAGE ONLY): 05/31/01 | 01/08/02 | 07/01/02 | 12/18/02 | 05/16/03 | 12/01/05

SHEET 102RI OF

FILE => I:\bb\04-0120OI\sas\contract plans and cco\cco\cco#23\update 12-21-07\dgn\aeplr08-r1.dgn

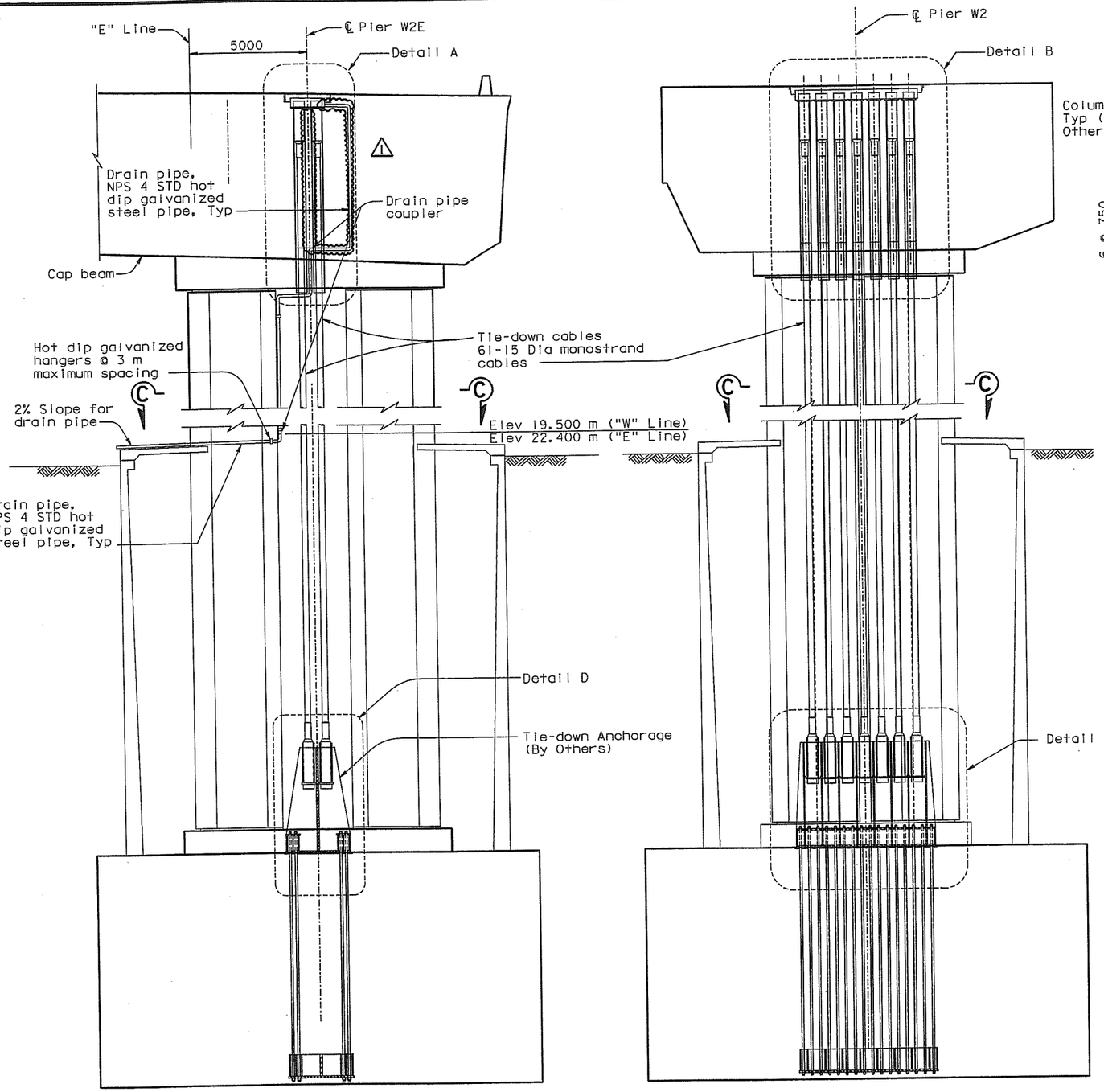

SECTION A-A
1:100

SECTION B-B
1:100

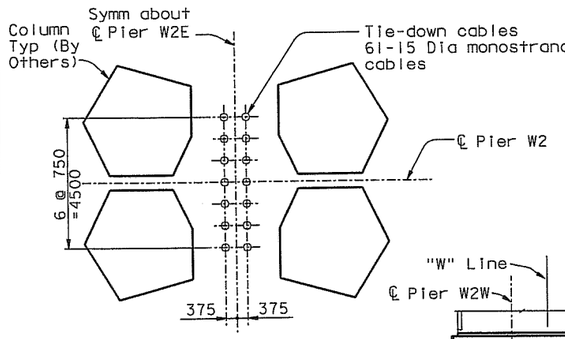

SECTION C-C
1:100

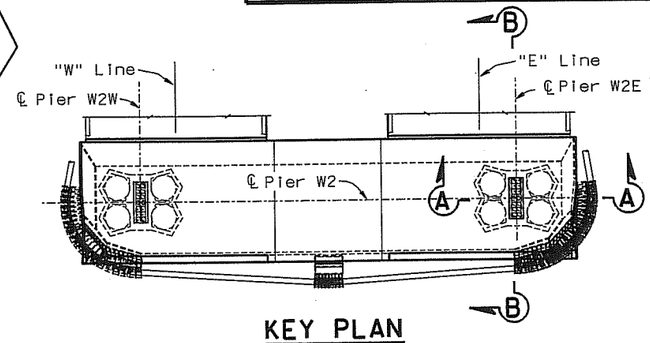

KEY PLAN
1:400

DIST.	COUNTY	ROUTE	KILOMETER POST TOTAL PROJECT	SHEET NO.	TOTAL SHEETS
04	SF	80	13.2/13.9	520R1	1204

REGISTERED ENGINEER - CIVIL

12-6-04
PLANS APPROVAL DATE

REGISTERED PROFESSIONAL ENGINEER — John Sun — No. C 54648 — Exp. 12/31/05 — CIVIL — STATE OF CALIFORNIA

The State of California or its officers or agents shall not be responsible for the accuracy or completeness of electronic copies of this plan sheet.

T.Y. LIN / MOFFATT & NICHOL
825 BATTERY STREET
SAN FRANCISCO, CA 94111

Caltrans now has a web site! To get to the web site, go to: http://www.dot.ca.gov

REGISTERED PROFESSIONAL ENGINEER — James P Duxbury — No. C 64677 — Exp. 06/30/07 — CIVIL — STATE OF CALIFORNIA

FOR REVISIONS ONLY

MARK	DATE	REVISIONS — DESCRIPTIONS	BY	CH'D	CCO=
1	07/21/06	W2 CAP BEAM ISD	JD	NV	23

CONTRACT CHANGE ORDER NO. 23
SHEET 97 OF 102

NOTES:

1. Tie-down cables shall be of ASTM A416 Grade 270 (fu=1860 MPa) seven wire, low relaxation monostrands, unless specified otherwise.
2. For Details A and B, see "Cable Tie-Down Details No.3" sheet.
3. For Details C and D, see "Cable Tie-Down Details No.4" sheet.
4. For additional prestressing details, see "Prestressing Notes" sheet.
5. For general stressing sequence, see "Pier W2 Construction Sequence" sheet.
6. Jacking force in the tie-down cables shall be 8570 kN typical.
7. For tie-down cable details, see "Cable Tie-Down Details No.2" sheet.
8. For "Cable Tie-Down Details" sheets, the Contractor shall verify all controlling field dimensions before ordering or fabricating any material.

100 % PS&E
TIME PLOTTED => 11:30:15
USERNAME => vlgnatovs DATE PLOTTED => 10 MAY 2007

ALL DIMENSIONS ARE IN MILLIMETERS UNLESS OTHERWISE SHOWN

R. Valizadeh/V. Toan/Y.L./W.L./F.C.
DESIGN OVERSIGHT
SIGN OFF DATE 07/21/06

	BY	CHECKED
DESIGN	J. Sun	J. Straski
DETAILS	S. Shi	J. Straski
QUANTITIES	J. Duxbury	S. Shi

PREPARED FOR THE STATE OF CALIFORNIA DEPARTMENT OF TRANSPORTATION

R. Manzanarez
PROJECT ENGINEER

BRIDGE NO. 34-0006L/R
KILOMETER POST 13.2/13.9

SAN FRANCISCO OAKLAND BAY BRIDGE EAST SPAN SEISMIC SAFETY PROJECT
SELF-ANCHORED SUSPENSION BRIDGE (SUPERSTRUCTURE & TOWER)

CABLE TIE-DOWN DETAILS NO. 1

ORIGINAL SCALE IN MILLIMETERS FOR REDUCED PLANS 0 10 20 30 40 50 60 70 80 90 100

CU 04
EA 0120F1

DISREGARD PRINTS BEARING EARLIER REVISION DATES →

REVISION DATES (PRELIMINARY STAGE ONLY): 05/05/99 | 08/02/99 | 05/31/01 | 04/08/02 | 07/01/02 | 12/19/02

SHEET 103R1 OF

Rev. Date: 5-18-98

FILE => I:\bb\04-0120F1\sas\contract plans and cco\cco\cco=23\geptd01.dgn

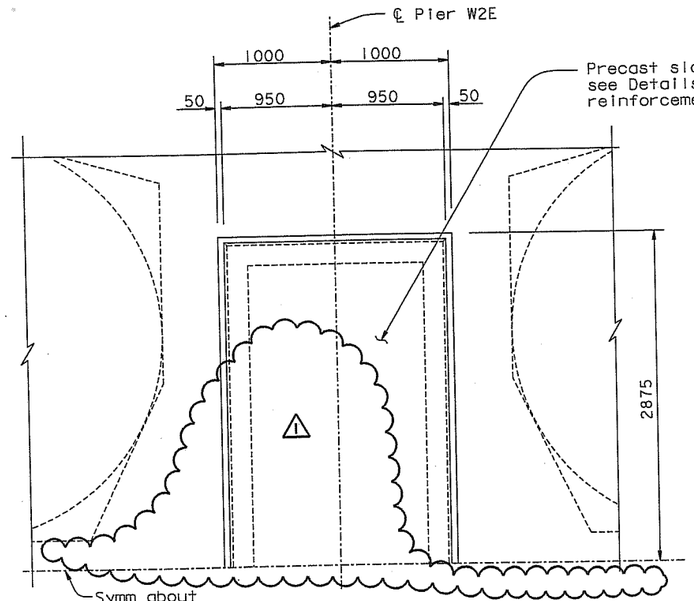

SECTION E-E
1:25

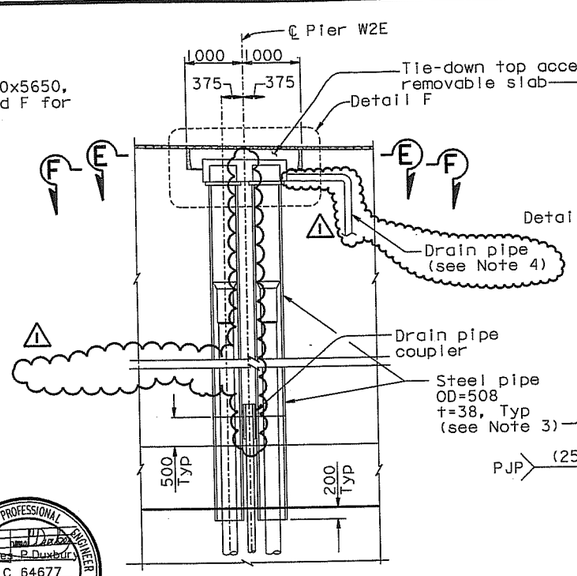

DETAIL A
1:50

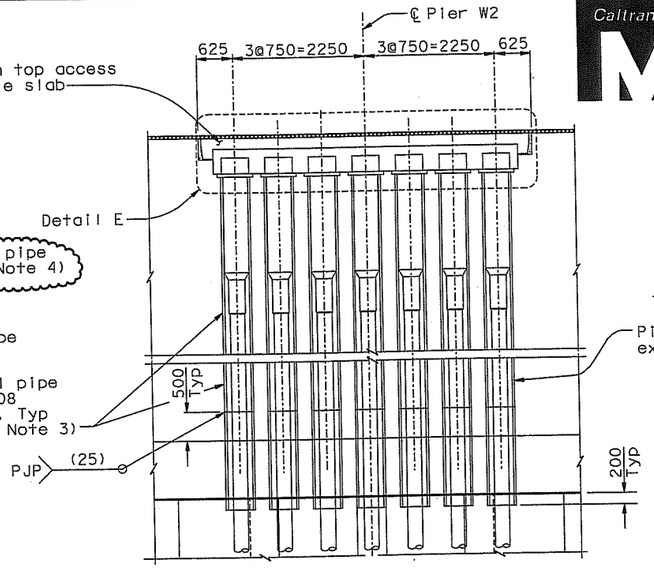

DETAIL B
1:50

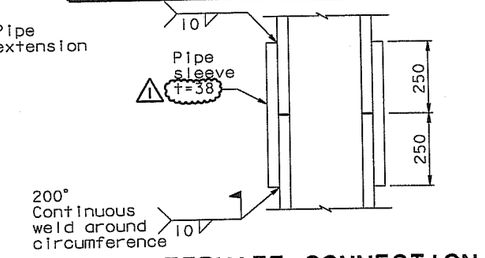

ALTERNATE CONNECTION FOR STEEL PIPE
1:10

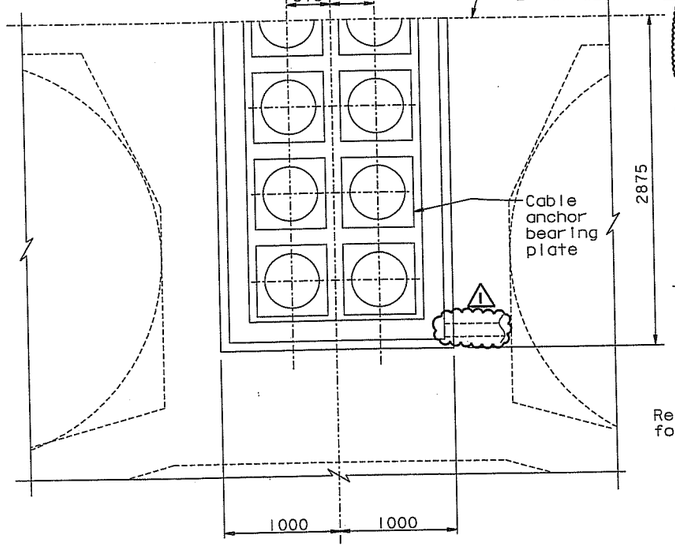

SECTION F-F
1:25

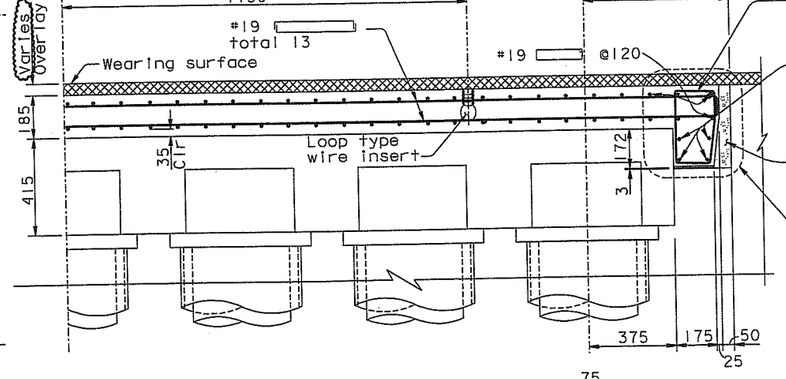

DETAIL E
1:12.5

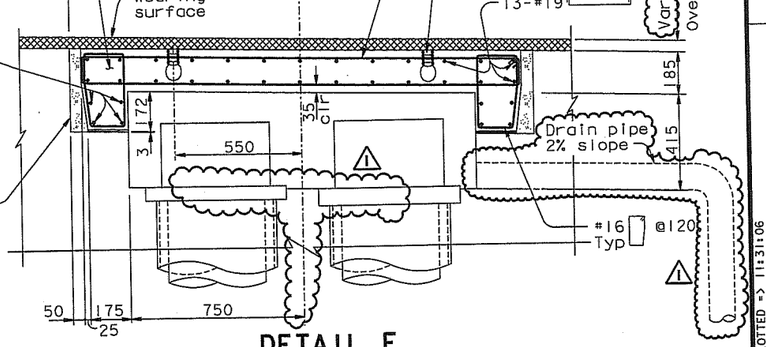

DETAIL F
1:12.5

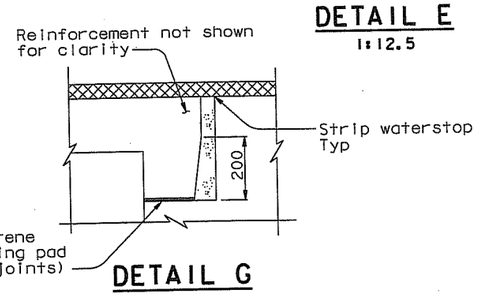

DETAIL G
1:10

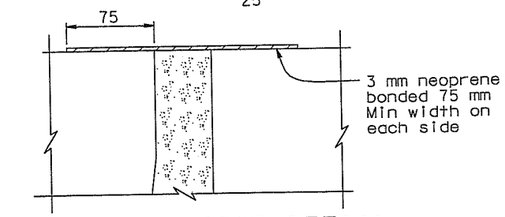

STRIP WATERSTOP DETAIL
1:2.5

NOTES:

1. For additional details, see "Cable Tie-down Details No.1" sheet.
2. Concrete for the precast slab should be f'c=60 MPa at 28 days.
3. Steel pipe shall be ASTM A709 M Grade 345 unless specified otherwise.
4. Drain pipe shall be spliced to the drain pipe provided by the Self-Anchored Suspension Bridge (W2) Contract (by Others). Drain shall be placed at the low point of the tie-down access. The Contractor may adjust location of the drain inlet to accommodate reinforcement and cap beam posttensioning.

ALL DIMENSIONS ARE IN MILLIMETERS UNLESS OTHERWISE SHOWN

FOR REVISIONS ONLY

MARK	DATE	DESCRIPTIONS	BY	CH'D	CCO#
		REVISIONS			
1	07/21/06	W2 CAP BEAM ISD	JD	NV	23

CONTRACT CHANGE ORDER NO. 23
SHEET 98 OF 102

DIST.	COUNTY	ROUTE	KILOMETER POST TOTAL PROJECT	SHEET NO.	TOTAL SHEETS
04	SF	80	13.2/13.9	522R1	1204

REGISTERED ENGINEER - CIVIL
12-6-04
PLANS APPROVAL DATE
REGISTERED PROFESSIONAL ENGINEER John Sun No. C 54648 Exp. 12/31/05 CIVIL STATE OF CALIFORNIA

The State of California or its officers or agents shall not be responsible for the accuracy or completeness of electronic copies of this plan sheet.

T.Y. LIN / MOFFATT & NICHOL
825 BATTERY STREET
SAN FRANCISCO, CA 94111

Caltrans now has a web site! To get to the web site, go to: http://www.dot.ca.gov

REGISTERED PROFESSIONAL ENGINEER Jon Duxbury No. C 64677 Exp. 06/30/07 CIVIL STATE OF CALIFORNIA

R. Vallizadeh/V. Toan/Y.L./W.L./F.C.
DESIGN OVERSIGHT
SIGN OFF DATE 07/21/06

	BY	CHECKED
DESIGN	J. Sun	J. Straski
DETAILS	S. Shi	J. Straski
QUANTITIES	J. Duxbury	S. Shi

PREPARED FOR THE STATE OF CALIFORNIA DEPARTMENT OF TRANSPORTATION

R. Manzanarez
PROJECT ENGINEER

BRIDGE NO. 34-0006L/R
KILOMETER POST 13.2/13.9

CU 04
EA 0120F1

DISREGARD PRINTS BEARING EARLIER REVISION DATES

REVISION DATES (PRELIMINARY STAGE ONLY): 05/15/99 08/02/99 05/31/01 04/08/02 07/29/02 12/07/05

SHEET 105R1 OF

ORIGINAL SCALE IN MILLIMETERS FOR REDUCED PLANS 0 10 20 30 40 50 60 70 80 90 100

Rev. Date: 5-18-98

FILE => I:\bb\04-012001\sas\contract plans and cco\cco\cco#23\aeptd03.dgn

SAN FRANCISCO OAKLAND BAY BRIDGE
EAST SPAN SEISMIC SAFETY PROJECT
SELF-ANCHORED SUSPENSION BRIDGE (SUPERSTRUCTURE & TOWER)

CABLE TIE-DOWN DETAILS NO. 3

100 % PS&E

USERNAME => v\ignatov\ PLOTTED => 10 MAY 2007 TIME PLOTTED => 11:31:06

DIST.	COUNTY	ROUTE	KILOMETER POST TOTAL PROJECT	SHEET NO.	TOTAL SHEETS
04	SF	80	13.2/13.9	773RI	1204

REGISTERED ENGINEER - CIVIL

12-6-04
PLANS APPROVAL DATE

REGISTERED PROFESSIONAL ENGINEER — John Sun — No. C 54648 — Exp. 12/31/05 — CIVIL — STATE OF CALIFORNIA

The State of California or its officers or agents shall not be responsible for the accuracy or completeness of electronic copies of this plan sheet.

T.Y. LIN / MOFFATT & NICHOL
825 BATTERY STREET
SAN FRANCISCO, CA 94111

To get to the web site, go to: http://www.dot.ca.gov

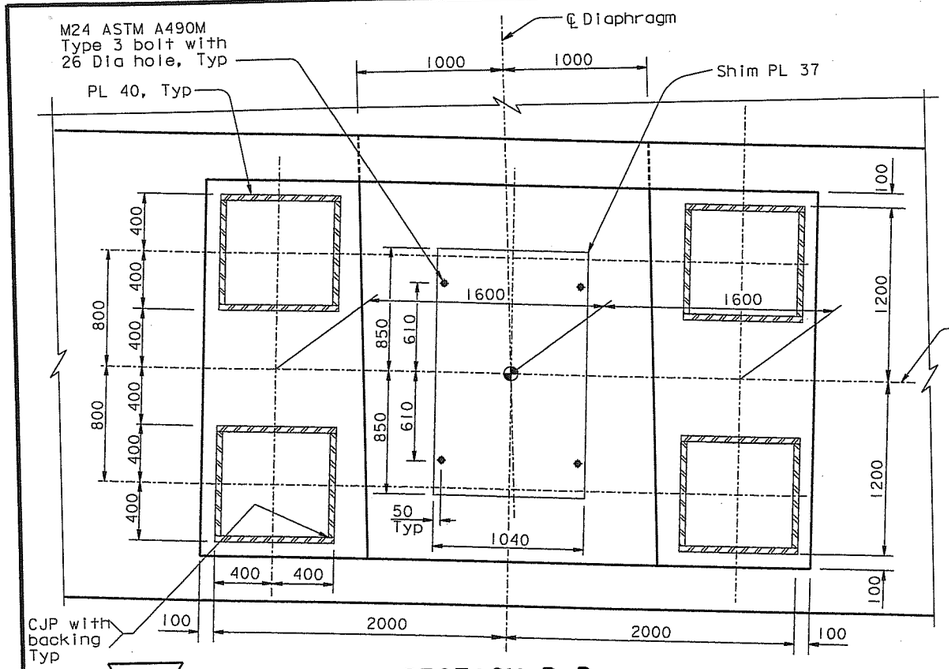

SECTION D-D
1:20

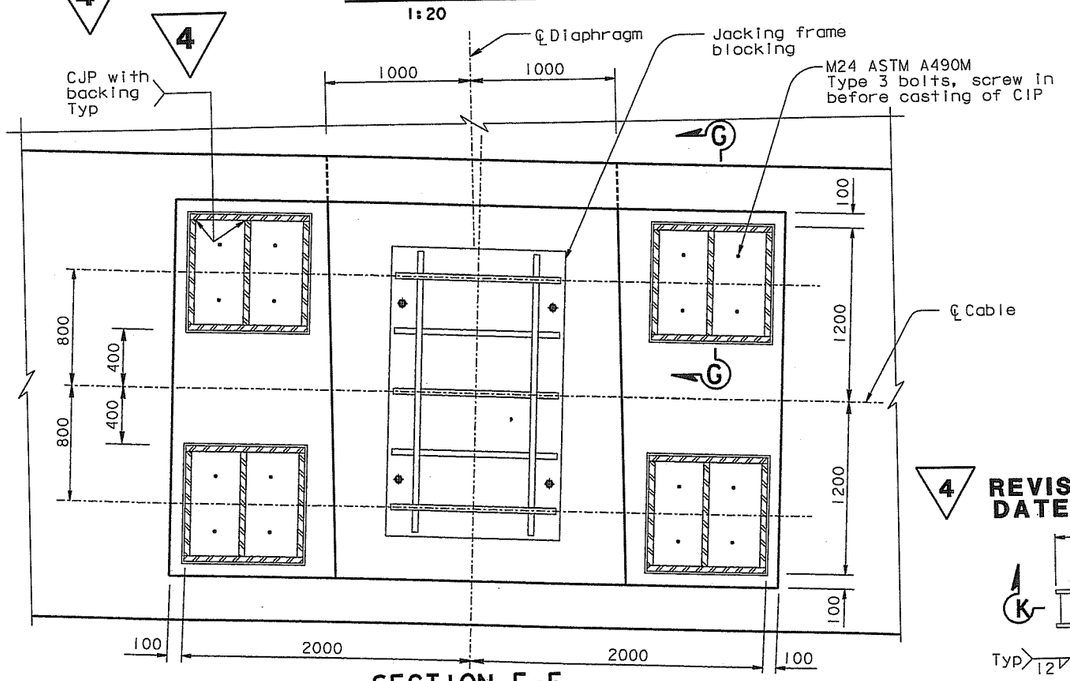

SECTION E-E
1:20

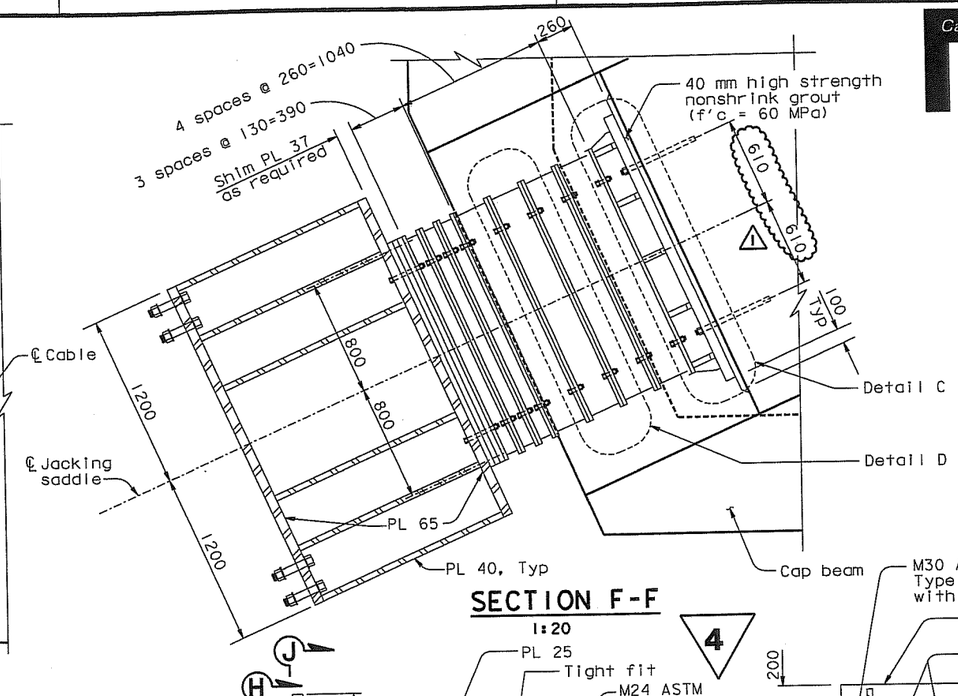

SECTION F-F
1:20

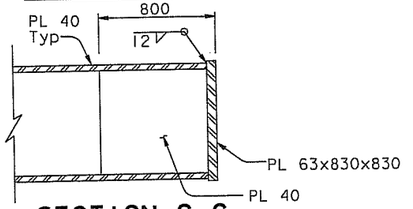

SECTION G-G
1:20

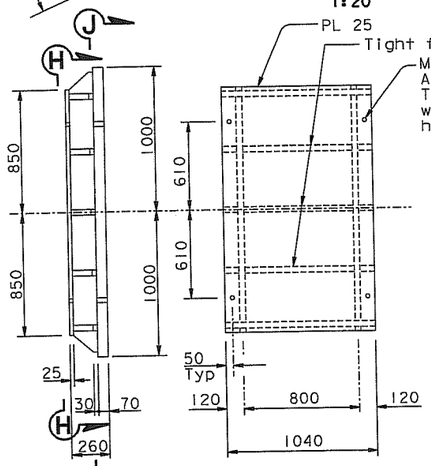

DETAIL C
1:20

SECTION H-H
1:20

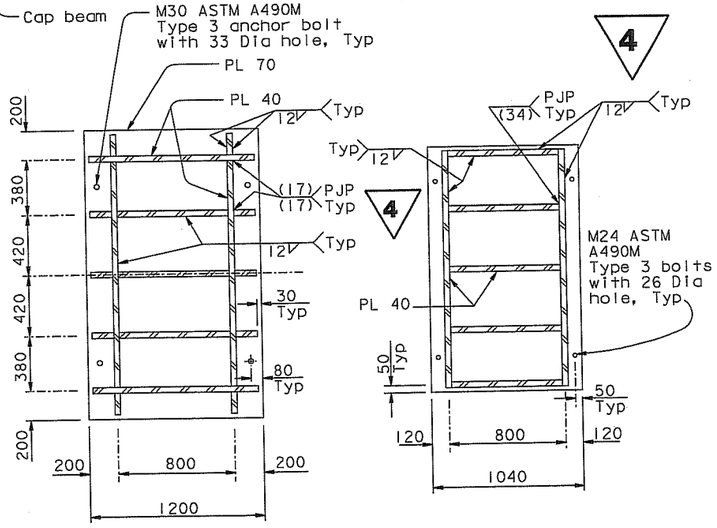

SECTION J-J
1:20

SECTION K-K
1:20

4 **REVISED PER ADDENDUM NO. 4 DATED DECEMBER 9, 2005**

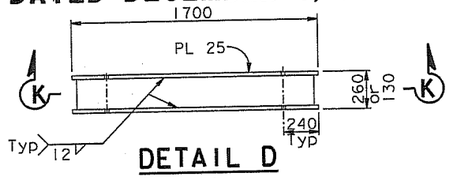

DETAIL D
1:20

REGISTERED PROFESSIONAL ENGINEER — James P. Duxbury — No. C 64677 — Exp. 06/30/07 — CIVIL — STATE OF CALIFORNIA

FOR REVISIONS ONLY NOTES:

1. For additional details, see "West Jacking Frame Details No.1" sheet.

MARK	DATE	REVISIONS / DESCRIPTIONS	BY	CH'D	CCO#
1	07/21/06	W2 CAP BEAM ISD	JD	NV	23

CONTRACT CHANGE ORDER NO. 23
SHEET 99 OF 102

ALL DIMENSIONS ARE IN MILLIMETERS UNLESS OTHERWISE SHOWN

SAN FRANCISCO OAKLAND BAY BRIDGE
EAST SPAN SEISMIC SAFETY PROJECT
SELF-ANCHORED SUSPENSION BRIDGE
(SUPERSTRUCTURE & TOWER)

WEST JACKING FRAME DETAILS NO. 2

DESIGN	BY J. Sun	CHECKED T. McMeans	
DETAILS	BY J. Duxbury	CHECKED T. McMeans	
QUANTITIES	BY J. Duxbury	CHECKED S. Shi	

PREPARED FOR THE STATE OF CALIFORNIA DEPARTMENT OF TRANSPORTATION

R. Manzanarez
PROJECT ENGINEER

BRIDGE NO. 34-0006L/R
KILOMETER POST 13.2/13.9

R. Valizadeh/V. Toan/Y.L./W.L./F.C.
DESIGN OVERSIGHT
SIGN OFF DATE 07/21/06

CU 04
EA 0120F1

DISREGARD PRINTS BEARING EARLIER REVISION DATES

REVISION DATES (PRELIMINARY STAGE ONLY): 08/28/00 | 05/24/01 | 04/26/02 | 07/26/02 | 12/26/02 | 11/13/05

SHEET 356RI OF

ORIGINAL SCALE IN MILLIMETERS FOR REDUCED PLANS 0 10 20 30 40 50 60 70 80 90 100

Rev. Date: 5-18-98

FILE => I:\bb\04-012001\sas\contract plans and cco\cco\cco#23\agsdd04d.dgn

USERNAME => visitor DATE PLOTTED => 28 MAR 2007 TIME PLOTTED => 10:15:40

100 % PS&E

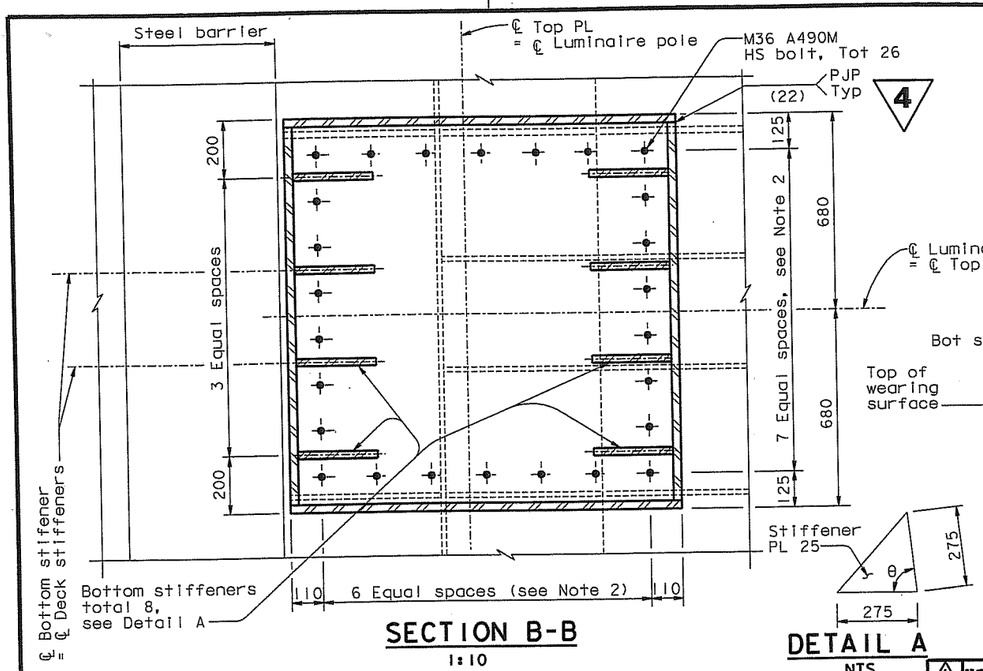

SECTION B-B

1:10

DETAIL A

NTS

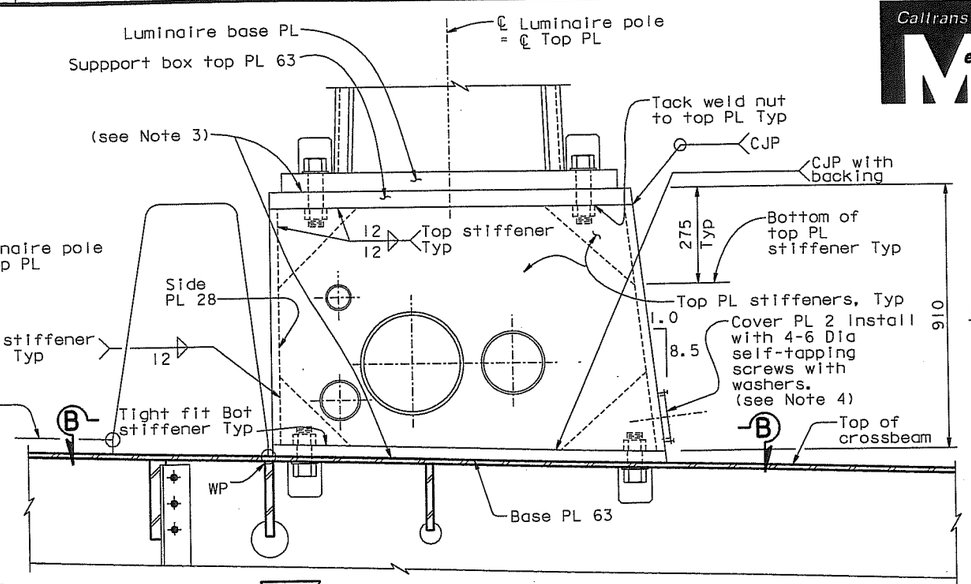

4 ELEVATION (OVER CROSSBEAM, WB shown, EB similar) WELDED LUMINAIRE SUPPORT BOX

1:10

MARK	DATE	DESCRIPTIONS	BY	CH'D	CCO#
		REVISIONS			
1	07/21/06	W2 CAP BEAM ISD	JD	NV	23

CONTRACT CHANGE ORDER NO. 23
SHEET 100 OF 102

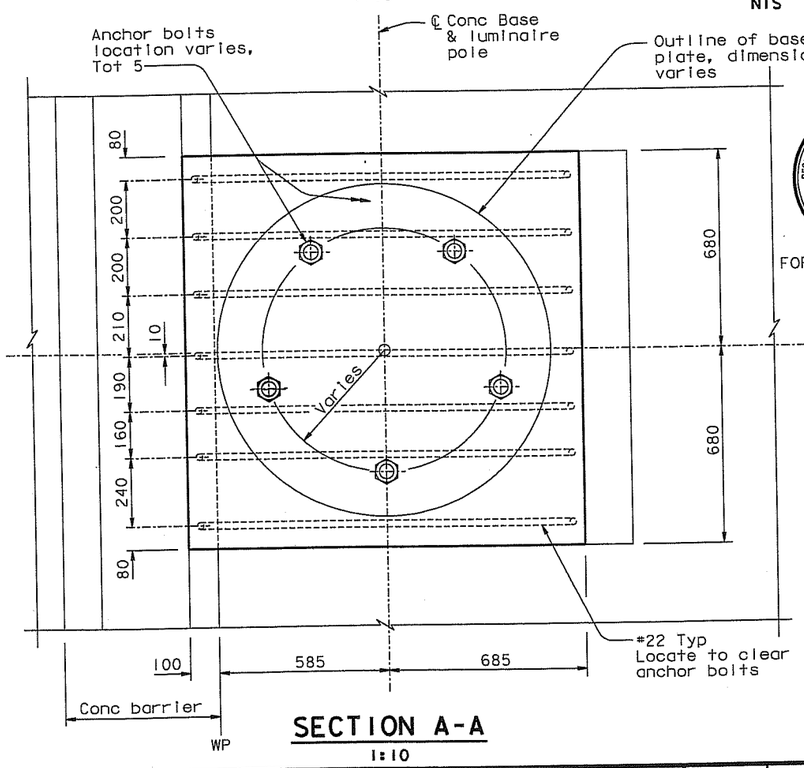

SECTION A-A

1:10

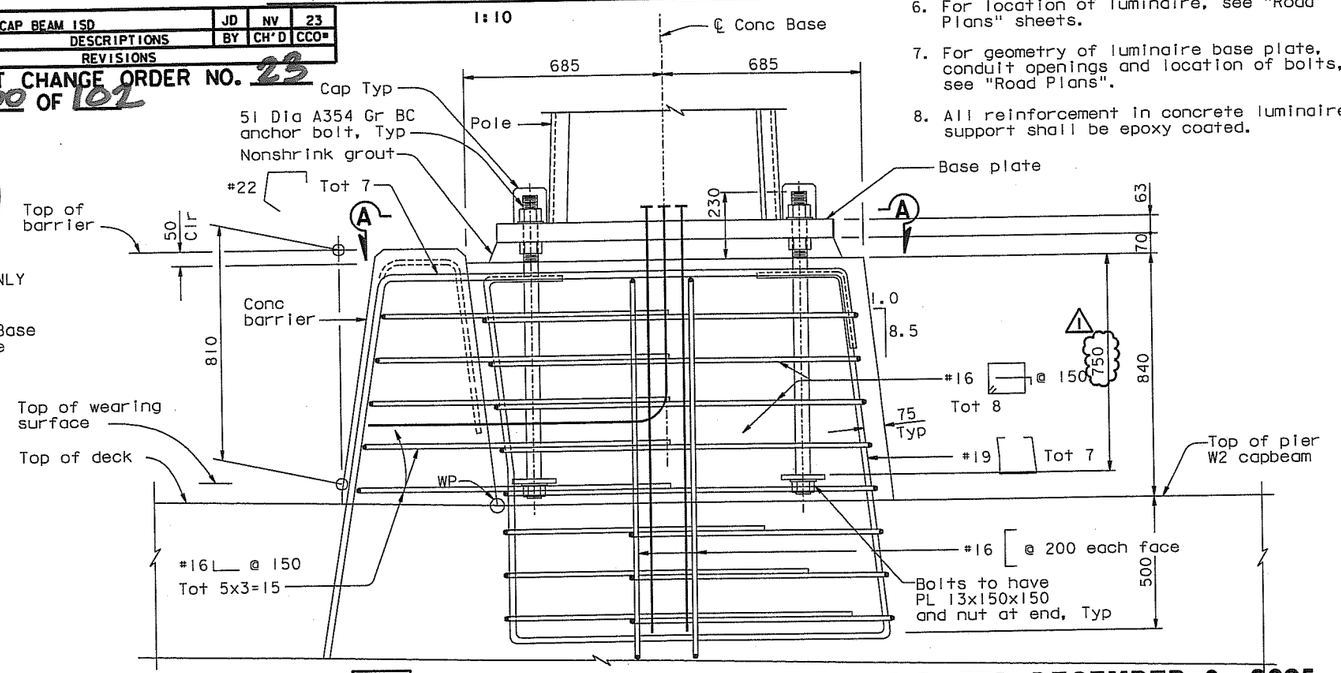

ELEVATION 4 REVISED PER ADDENDUM NO. 4 DATED DECEMBER 9, 2005

CONCRETE LUMINAIRE SUPPORT

1:10

ALL DIMENSIONS ARE IN MILLIMETERS UNLESS OTHERWISE SHOWN

FOR REVISIONS ONLY

Registered Professional Engineer — Vinod P. Duvvuru — No. C 64677 — Exp. 06/30/07 — CIVIL — State of California

Caltrans Metric

DIST.	COUNTY	ROUTE	KILOMETER POST TOTAL PROJECT	SHEET NO.	TOTAL SHEETS
04	SF	80	13.2/13.9	905R1	1204

REGISTERED ENGINEER - CIVIL

12-6-04
PLANS APPROVAL DATE

Registered Professional Engineer — Tien Hung Ho — No. C 43990 — Exp. 06/30/07 — CIVIL — State of California

The State of California or its officers or agents shall not be responsible for the accuracy or completeness of electronic copies of this plan sheet.

T.Y. LIN / MOFFATT & NICHOL
825 BATTERY STREET
SAN FRANCISCO, CA 94111

To get to the web site, go to: http://www.dot.ca.gov

NOTES:

1. For dimensions and details not shown, see "Luminaire Support Details No.1" sheet.
2. Contractor to adjust bolt spacing according to field measurement of deck stiffener location.
3. Surfaces of plates shall be milled level to ensure bearing.
4. Silicone seal around edge of cover plate to ensure watertightness.
5. The Contractor shall submit for approval by the Engineer details of conduit penetration through deck plate. Conduit penetration details shall be completely sealed to ensure no water leakage into support box.
6. For location of luminaire, see "Road Plans" sheets.
7. For geometry of luminaire base plate, conduit openings and location of bolts, see "Road Plans".
8. All reinforcement in concrete luminaire support shall be epoxy coated.

100 % PS&E

DATE PLOTTED => 28 MAR 2007 TIME PLOTTED => 10:16:38

USERNAME => visitor

DESIGN	BY T. Ho	CHECKED	C. Redfield
DETAILS	BY R. Xu	CHECKED	C. Redfield
QUANTITIES	BY C. Mauch	CHECKED	K. Cormier

R. Valizadeh/V. Toan/Y.L./W.L./F.C.
DESIGN OVERSIGHT
SIGN OFF DATE 07/21/06

Rev. Date: 5-18-98

PREPARED FOR THE STATE OF CALIFORNIA DEPARTMENT OF TRANSPORTATION

R. Manzanarez
PROJECT ENGINEER

CU 04
EA 0120F1

BRIDGE NO. 34-0006L/R
KILOMETER POST 13.2/13.9

SAN FRANCISCO OAKLAND BAY BRIDGE
EAST SPAN SEISMIC SAFETY PROJECT
SELF-ANCHORED SUSPENSION BRIDGE
(SUPERSTRUCTURE & TOWER)

LUMINAIRE SUPPORT DETAILS NO. 2

DISREGARD PRINTS BEARING EARLIER REVISION DATES →

REVISION DATES (PRELIMINARY STAGE ONLY): 05/31/01 09/06/02 01/01/02 12/31/02 11/13/05

SHEET 488R1 OF

ORIGINAL SCALE IN MILLIMETERS FOR REDUCED PLANS 0 10 20 30 40 50 60 70 80 90 100

FILE => I:\bb\04-0120F1\sas\contract plans and cco\cco\cco#23\dklht08a.dgn

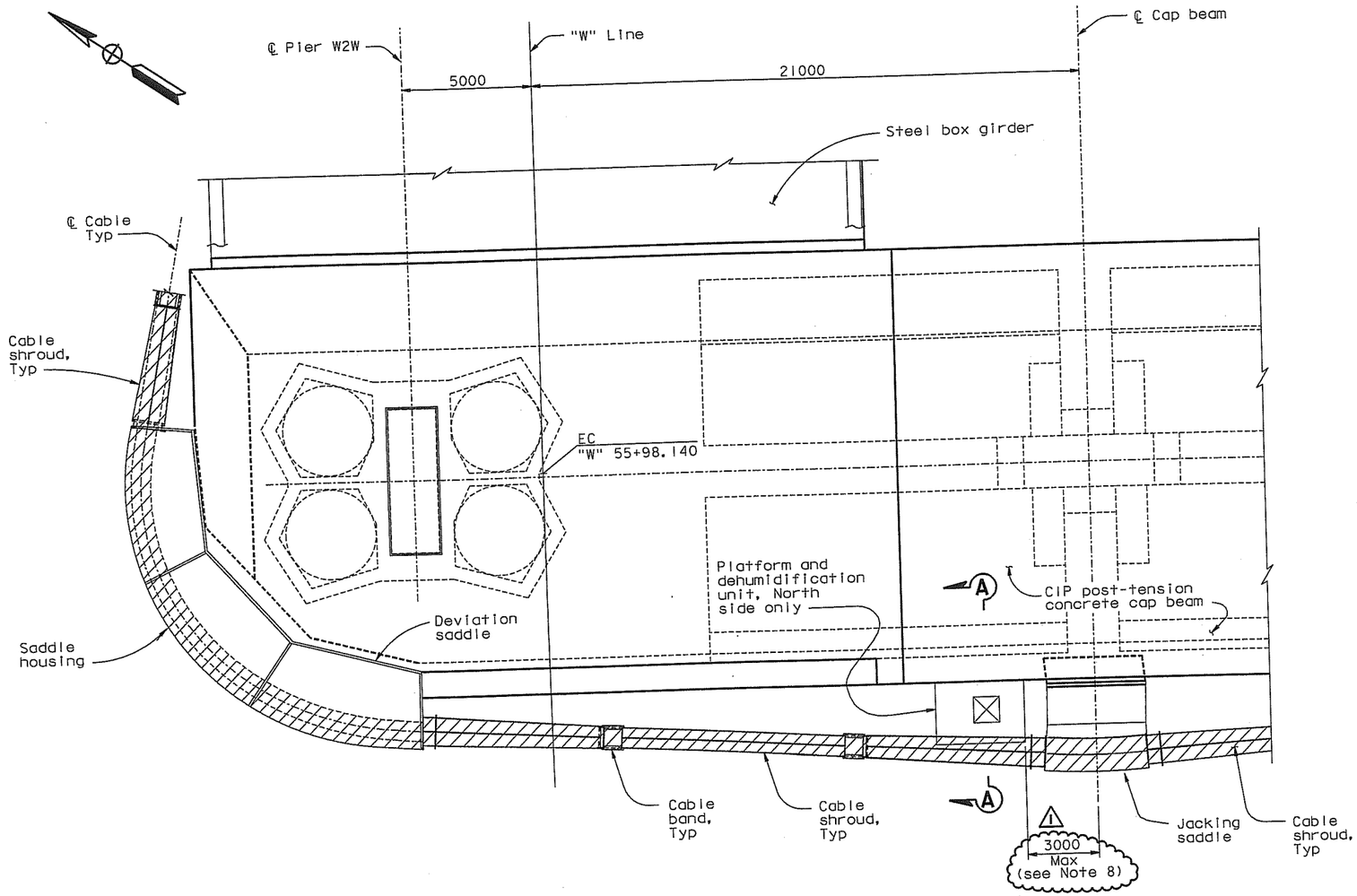

WEST PIER MAIN CABLE ANCHORAGE LAYOUT

DETAIL D

1:100

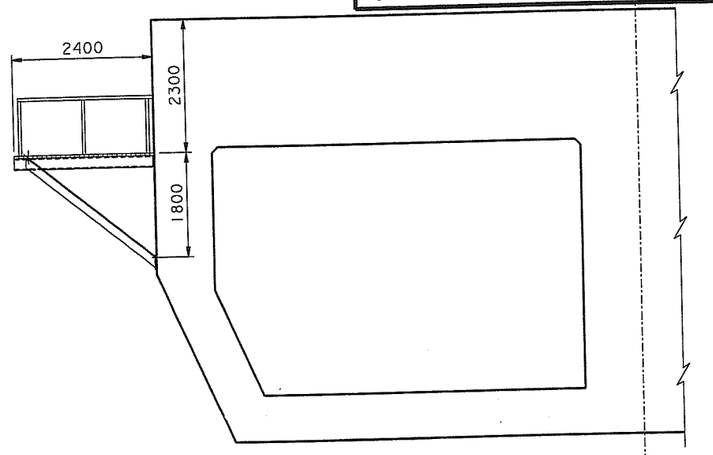

SECTION A-A

1:50

LEGEND:

Limits of dehumidification

Dehumidifier

NOTES:

1. For saddle housings, see "West Deviation Saddle Housing Details" and "West Jacking Saddle Housing Details" sheets.
2. For cable shrouds, see "West Cable Shroud Details" sheets.
3. For Cable bands, see "Cable Band Details" sheets.
4. For cable saddles, see "West Deviation Saddle Details" and "West Jacking Saddle Details" sheets.
5. Duct supports shall preferably be mounted to cable bands and saddles.
6. North side shown. South side similar, unless noted otherwise.
7. For dehumidification platform details, see "Dehumidification Support Details No.7" sheet.
8. At the option of the Contractor the location of the platform may vary transversely to satisfy his means and methods.

MARK	DATE	DESCRIPTIONS	BY	CH'D	CCO#
1	07/21/06	W2 CAP BEAM ISD	GB	NV	23
		REVISIONS			

CONTRACT CHANGE ORDER NO. 23
SHEET 101 OF 102

DIST.	COUNTY	ROUTE	KILOMETER POST TOTAL PROJECT	SHEET NO.	TOTAL SHEETS
04	SF	80	13.2/13.9	962R1	1204

George Baker
REGISTERED ENGINEER - CIVIL
1-27-03
PLANS APPROVAL DATE

PROFESSIONAL ENGINEER — REGISTERED — George S. Baker — No. C 57112 — Exp. 12/31/07 — CIVIL — STATE OF CALIFORNIA

The State of California or its officers or agents shall not be responsible for the accuracy or completeness of electronic copies of this plan sheet.

T.Y. LIN / MOFFATT & NICHOL
825 BATTERY STREET
SAN FRANCISCO, CA 94111

To get to the web site, go to: http://www.dot.ca.gov

ALL DIMENSIONS ARE IN MILLIMETERS UNLESS OTHERWISE SHOWN

SAN FRANCISCO OAKLAND BAY BRIDGE
EAST SPAN SEISMIC SAFETY PROJECT
SELF-ANCHORED SUSPENSION BRIDGE
(SUPERSTRUCTURE & TOWER)

DEHUMIDIFICATION SUPPORT DETAILS NO.6

DESIGN	BY G. Baker	CHECKED T. Ho	
DETAILS	BY C. Mauch	CHECKED T. Ho	
QUANTITIES	BY C. Mauch	CHECKED D. Harrison	

PREPARED FOR THE STATE OF CALIFORNIA
DEPARTMENT OF TRANSPORTATION

R. Manzanarez
PROJECT ENGINEER

BRIDGE NO. 34-0006L/R
KILOMETER POST 13.2/13.9

CU 04
EA 0120F1

R. Valizadeh/V. Toan/Y.L./W.L./F.C.
DESIGN OVERSIGHT
SIGN OFF DATE 07/21/06

DISREGARD PRINTS BEARING EARLIER REVISION DATES →
REVISION DATES (PRELIMINARY STAGE ONLY): 04/26/02 07/19/02 12/19/02

SHEET 545R1 OF

ORIGINAL SCALE IN MILLIMETERS FOR REDUCED PLANS 0 10 20 30 40 50 60 70 80 90 100

FILE => I:\bb\04-0120F1\sas\contract plans and cco\cco\cco#23\akdeh06.dgn

Rev. Date: 5-18-98

USERNAME => visitor DATE PLOTTED => 28 MAR 2007 TIME PLOTTED => 10:17:39

100 % PS&E

POST-TENSIONING CHARACTERISTICS ASSUMED FOR DESIGN

1. Prestressing strand
   - Friction curvature coefficient : 0.20
   - Friction wobble coefficient : 0.0007/m
   - Anchor set : 6 mm
2. Prestressing {monostrand (Tie-down cables only) (2)
   - Friction curvature coefficient : N/A
   - Friction wobble coefficient : 0.0007/m
   - Anchor set : 6 mm
3. High strength rods (where applicable)
   - Friction curvature coefficient : 0.25
   - Friction wobble coefficient : 0.0007/m
   - Anchor set : 2 mm
4. High strength PT rod (75 mm)
   - Friction curvature coefficient : 0.25
   - Friction wobble coefficient : 0.0012/m
   - Anchor set : 2 mm
5. Prestressing strands shall conform to ASTM A416, low relaxation, 7-wire strands, with guaranteed minimum ultimate strength of 1860 MPa.
6. Prestressing {monostrands (2) {(Tie-down cables only)} (2) shall conform to ASTM A416, low relaxation, 7-wire strands, with guaranteed minimum ultimate strength of 1860 MPa.
7. High strength rods (ASTM A354 Grade BD) shall have a guaranteed minimum ultimate strength of 965 MPa.
8. High strength rods (ASTM A354 Grade BC) shall have a guaranteed minimum ultimate strength of 793 MPa.
9. High strength rods (ASTM A722) shall have a guaranteed minimum ultimate strength of 1030 MPa.
10. High strength PT rods (75 mm) shall have a guaranteed minimum ultimate strength of 1030 MPa.

PRETENSIONING/GROUTING SEQUENCE

1. The pretensioning and grouting sequence of the Pier W2 prestressing strand tendons and of the Pier W2 high strength anchor rods (anchor bolts) shall be included with the Contractor's erection plan. The Contractor shall submit the erection plan along with the pretensioning and grouting sequence to the Engineer for review and approval.
2. The pretensioning and grouting sequence of the Pier T1 (Tower) high strength anchor rods (anchor bolts) shall be included with the Contractor's erection plan. The Contractor shall submit the erection plan along with the pretensioning and grouting sequence to the Engineer for review and approval.
3. The pretensioning and grouting sequence of the Pier E2 prestressing strand tendons and of the Pier E2 Bearing and Pier E2 Shear Key high strength anchor rods (anchor bolts) shall be included with the Contractor's erection plan. The Contractor shall submit the erection plan along with the pretensioning and grouting sequence to the Engineer for review and approval.

STRESSING FORCE LIMITS

1. All high strength anchor rods (anchor bolts) shall be pretensioned by jacking to 70% of their ultimate tensile strength, unless noted otherwise.
2. Force in all permanent high strength prestressing tendons shall not exceed 70% of the guaranteed minimum ultimate strength of the tendon after seating.
3. Force in all permanent high strength rods (anchor bolts) shall not exceed 70% of the guaranteed minimum ultimate strength of the bar after seating.

CONCRETE

1. A minimum compressive strength of 36 MPa (f'ci) shall be attained in the concrete of Pier W2 and Pier E2 crossbeams prior to stressing. (1)

HIGH STRENGTH NONSHRINK GROUT

1. All high strength nonshrink grout shall attain a minimum compressive strength of f'ci=75% f'c (MPa) prior to being subjected to subsequent loading and before pretensioning operations.

PT DUCTS

1. Ducts for prestressing strand tendons and high strength rods (anchor bolts) shall consist of galvanized corrugated steel ducts, unless noted otherwise.
2. Prebent ducts shall be used for prestressing tendons with radius less than 10 m.
3. Prestressing strand tendon suppliers shall provide and use extra strong steel pipes (ASTM A53 Type S, Grade B (fy = 240 MPa) and necessary hardware connecting the steel pipes to galvanized corrugated steel ducts where radius of PT ducts is less than 5000 mm.
4. (1) Based on the Contractor's stressing sequence, local strengthening of PT ducts (e.g. extra strong steel pipes) at critical location's may be required.

GROUT FOR PT DUCTS/PIPE SLEEVES

1. Tie-down cables with (2) monostrands shall not be grouted.
2. Ducts shall be grouted with nonshrink grout (f'c=60 MPa).
3. Nonshrink grout shall attain a strength of 36 MPa (f'ci) minimum before being subjected to stresses due t subseqent loading.

BLOCKOUT CONCRETE

1. After completion of all pretensioning and grouting operations, the blockout closure reinforcement shall be bent into place over the anchors before the blockouts are filled with concrete (f'c=60 MPa).

Caltrans Metric

DIST.	COUNTY	ROUTE	KILOMETER POST TOTAL PROJECT	SHEET NO.	TOTAL SHEETS
04	SF	80	13.2/13.9	981R2	1204

REGISTERED ENGINEER - CIVIL
John Sun, No. C 54648, Exp. 12/31/05, CIVIL, REGISTERED PROFESSIONAL ENGINEER, STATE OF CALIFORNIA
12-6-04
PLANS APPROVAL DATE

The State of California or its officers or agents shall not be responsible for the accuracy or completeness of electronic copies of this plan sheet.

T.Y. LIN / MOFFATT & NICHOL
825 BATTERY STREET
SAN FRANCISCO, CA 94111

To get to the web site, go to: http://www.dot.ca.gov

Marwan N. Nader, No. C 054426, Exp. 12/31/07, CIVIL, REGISTERED PROFESSIONAL ENGINEER, STATE OF CALIFORNIA

FOR REVISIONS ONLY

MARK	DATE	DESCRIPTIONS	BY	CH'D	CCO#
		REVISIONS			
(2)	02/28/07	TIE-DOWN CABLE PRESTRESSING NOTES	JD	AS	23
(1)	07/21/06	CONCRETE STRENGTH, ISD	MN	NV	23

CONTRACT CHANGE ORDER NO. 23
SHEET 102 OF 102

ALL DIMENSIONS ARE IN MILLIMETERS UNLESS OTHERWISE SHOWN

R. Valizadeh/V. Toan/Y.L./W.L./F.C.
DESIGN OVERSIGHT
SIGN OFF DATE 02/28/07

DESIGN	BY J. Sun	CHECKED J. Duxbury	
DETAILS	BY J. Sun	CHECKED J. Duxbury	
QUANTITIES	BY J. Sun	CHECKED J. Duxbury	

PREPARED FOR THE STATE OF CALIFORNIA
DEPARTMENT OF TRANSPORTATION

R. Manzanarez
PROJECT ENGINEER

CU 04
EA 0120F1

BRIDGE NO. 34-0006L/R
KILOMETER POST 13.2/13.9

SAN FRANCISCO OAKLAND BAY BRIDGE
EAST SPAN SEISMIC SAFETY PROJECT
SELF-ANCHORED SUSPENSION BRIDGE
(SUPERSTRUCTURE & TOWER)

PRESTRESSING NOTES

SHEET 564R2 OF

DISREGARD PRINTS BEARING EARLIER REVISION DATES
REVISION DATES (PRELIMINARY STAGE ONLY): 04/20/02 07/19/02 12/19/02

ORIGINAL SCALE IN MILLIMETERS FOR REDUCED PLANS 0 10 20 30 40 50 60 70 80 90 100

Rev. Date: 5-18-98

FILE => I:\bb\04-0120F1\sas\contract plans and cco\cco\cco#23\updates\agptn01.dgn

100 % PS&E
DATE PLOTTED => 16 MAR 2007 TIME PLOTTED => 13:13:32
USERNAME => bkwok