DIST.	COUNTY	ROUTE	KILOMETER POST TOTAL PROJECT	SHEET NO.	TOTAL SHEETS
04	SF	80	13.2/13.9	519R1	1204

REGISTERED ENGINEER - CIVIL

12-6-04
PLANS APPROVAL DATE

REGISTERED PROFESSIONAL ENGINEER Alex E. Sanjines No. C 051153 Exp. 9/30/07 CIVIL STATE OF CALIFORNIA

The State of California or its officers or agents shall not be responsible for the accuracy or completeness of electronic copies of this plan sheet.

T.Y. LIN / MOFFATT & NICHOL
825 BATTERY STREET
SAN FRANCISCO, CA 94111

Caltrans now has a web site! To get to the web site, go to: http://www.dot.ca.gov

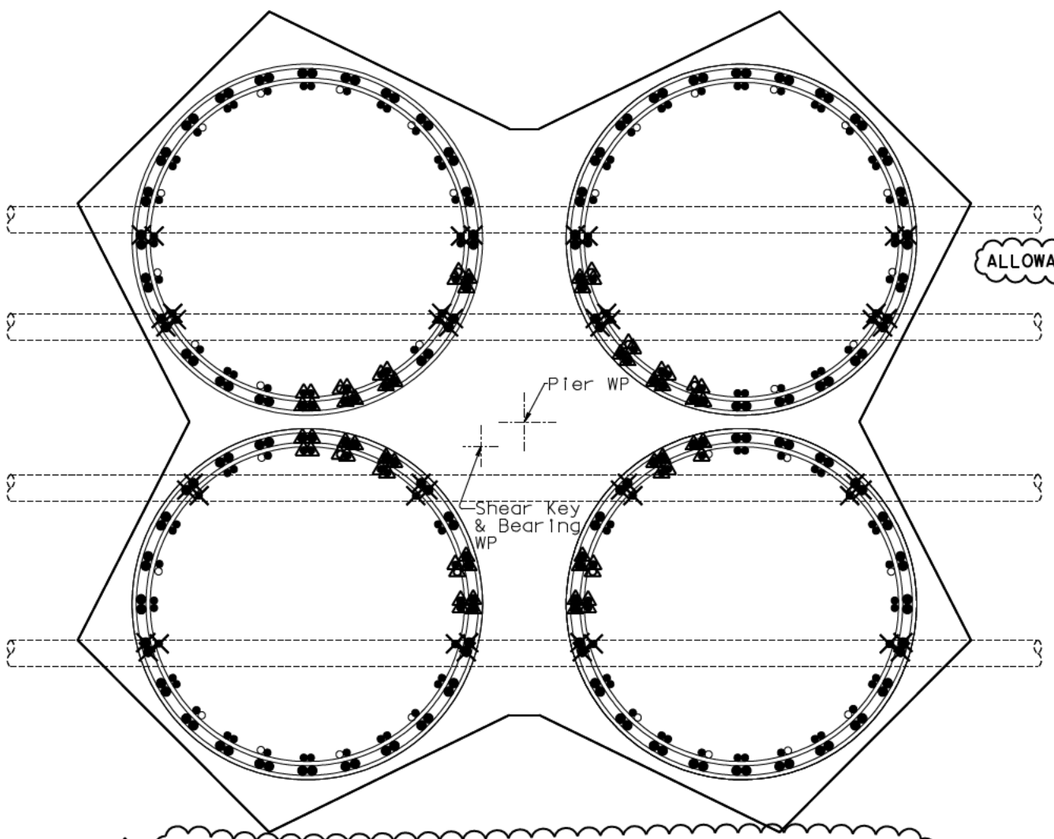

CUTOFF ALLOWANCE FOR COLUMN REINFORCEMENT

NTS

(Allowance shown is theoretical and is for information only. Not for construction). (see Note 2 thru 4)

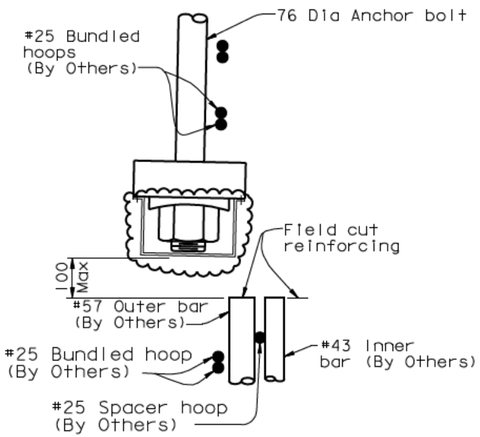

ALLOWANCE FOR ANCHOR BOLT AND ANCHOR PLATE

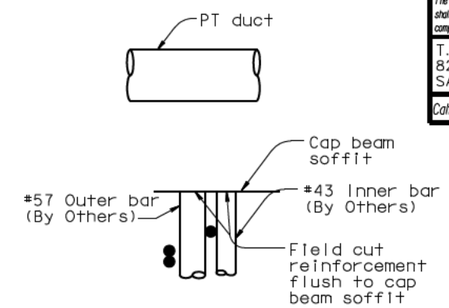

ALLOWANCE FOR PT DUCT

FIELD CUT DETAIL

NTS

(see Notes 2 thru 4)

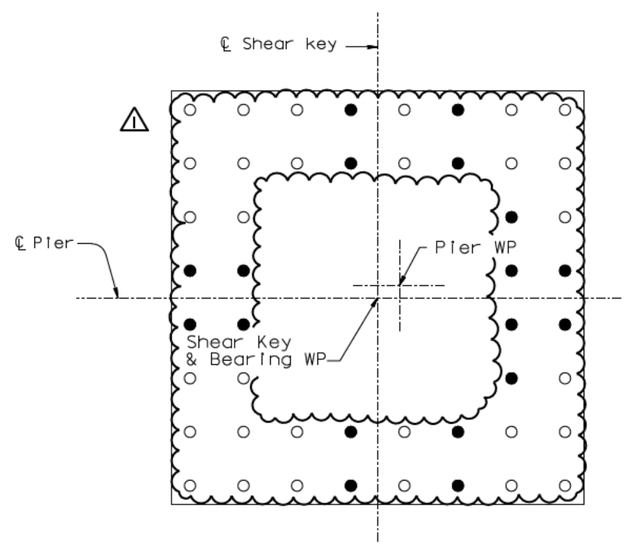

SECTION C-C

1:20

(Anchor bolt length layout)

LEGEND:

- o Anchor bolts length = L1
- • Anchor bolts length = L2
- × Indicates #43 or #57 column reinforcement may be field cut below the ducts. See "Allowance for PT duct".
- △ Indicates #43 or #57 column reinforcement may be field cut below the anchor bolt or anchor PL. See "Allowance for anchor bolt and anchor plate".

NOTES:

1. Local confining spiral reinforcement for bearing HS bolts shall be provided by hardware suppliers; not shown for clarity.
2. Rotate anchor plates as necessary to clear column reinforcement.
3. Contractor may field cut existing column reinforcement marked with X or △ to clear PT ducts and shear key anchor bolt/anchor plate. See Field Cut Detail.
4. Prior to cutting any column reinforcement, the Contractor is required to submit locations and number of bars to be field cut to Engineer's review and approval.

MARK	DATE	DESCRIPTIONS	BY	CH'D	CCO#
1	07/21/06	E2 CAP BEAM ISD	AS	NV	23

REVISIONS

CONTRACT CHANGE ORDER NO. ____
SHEET ___ OF ___

ALL DIMENSIONS ARE IN MILLIMETERS UNLESS OTHERWISE SHOWN

R. Valizadeh/V.Toan/Y.L./W.L./F.C.
DESIGN OVERSIGHT
Roya Valizadeh / Vong P. Toan / Y. Liu
SIGN OFF DATE 07/21/06

	BY	CHECKED
DESIGN	A. Sanjines	J. Chan
DETAILS	R. Xu	J. Chan
QUANTITIES	C. Bernardo	B. Mason

PREPARED FOR THE STATE OF CALIFORNIA DEPARTMENT OF TRANSPORTATION

R. Manzanarez
PROJECT ENGINEER

BRIDGE NO. 34-0006L/R
KILOMETER POST 13.2/13.9

SAN FRANCISCO OAKLAND BAY BRIDGE
EAST SPAN SEISMIC SAFETY PROJECT
SELF-ANCHORED SUSPENSION BRIDGE
(SUPERSTRUCTURE & TOWER)

PIER E2 DETAILS NO. 10

Rev. Date: 5-18-98

ORIGINAL SCALE IN MILLIMETERS FOR REDUCED PLANS 0 10 20 30 40 50 60 70 80 90 100

CU 04
EA 0120F1

DISREGARD PRINTS BEARING EARLIER REVISION DATES

REVISION DATES (PRELIMINARY STAGE ONLY) 05/24/01 04/08/02 07/09/02 12/19/02 05/16/03 12/07/05

SHEET 102R1 OF

FILE -> I:\bb\04-012001\sas\contract plans and cco\cco\cco#23\update 12-21-07\dgn\aeplr08-r1.dgn

USERNAME => pfram DATE PLOTTED => 21 DEC 2007 TIME PLOTTED => 10:21:32

100 % PS&E