Caltrans now has a web site! To get to the web site, go to: http://www.dot.ca.gov

Caltrans Metric

DIST.	COUNTY	ROUTE	KILOMETER POST TOTAL PROJECT	SHEET NO.	TOTAL SHEETS
04	SF	80	13.2/13.9	511R1	1204

REGISTERED ENGINEER - CIVIL

12-6-04
PLANS APPROVAL DATE

REGISTERED PROFESSIONAL ENGINEER Alex E. Sanjines No. C 051153 Exp. 9/30/07 CIVIL STATE OF CALIFORNIA

The State of California or its officers or agents shall not be responsible for the accuracy or completeness of electronic copies of this plan sheet.

T.Y. LIN / MOFFATT & NICHOL
825 BATTERY STREET
SAN FRANCISCO, CA 94111

Caltrans now has a web site! To get to the web site, go to: http://www.dot.ca.gov

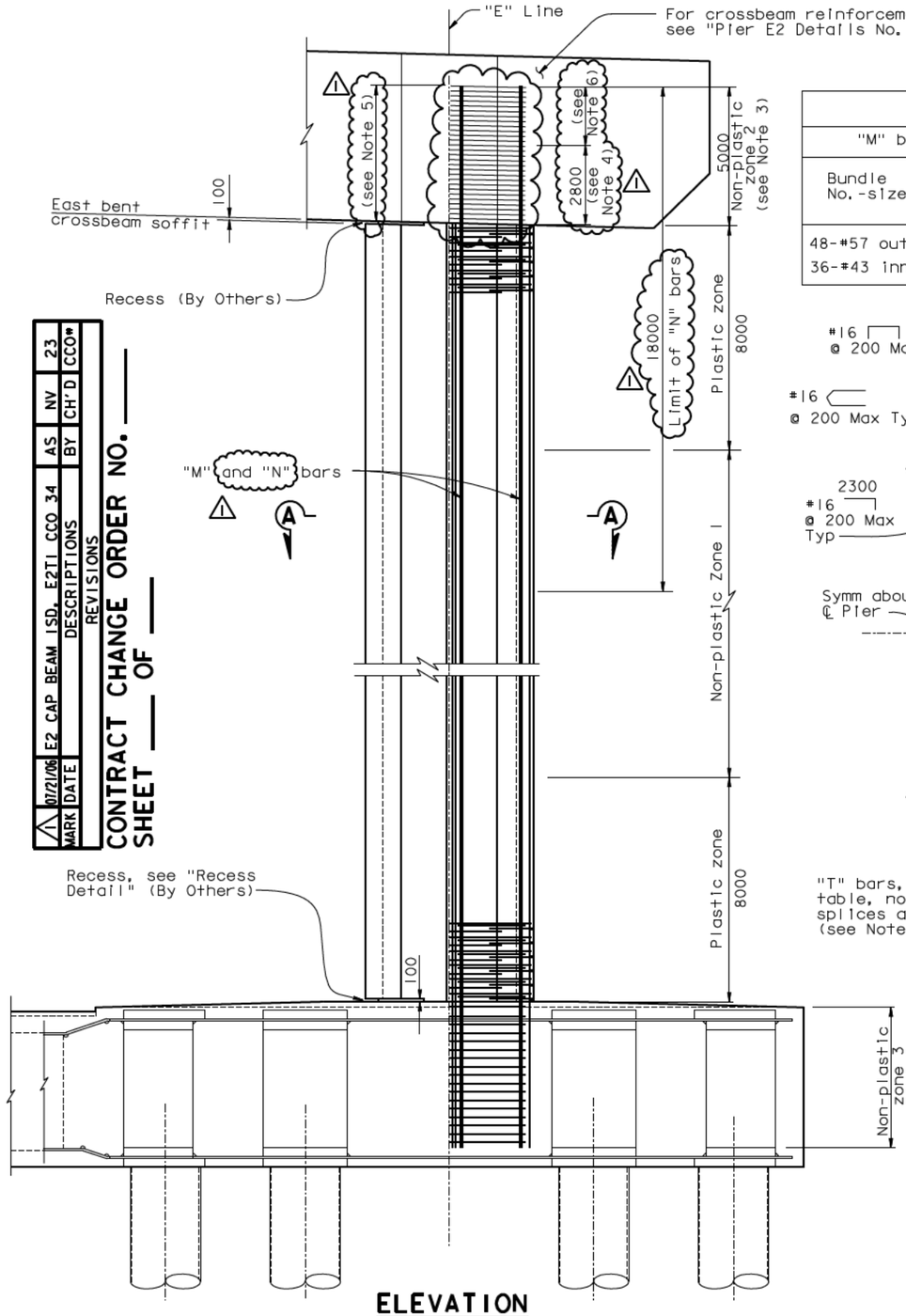

ELEVATION
1:100

Pier reinforcement (see Note 1)

"M" bars		"N" bars		"T" and "L" bars				Continuous welded hoop							
				Plastic zone		Non-plastic zone 1		Plastic zone		Non-plastic zone 1		Non-plastic zone 2		Non-plastic zone 3	
Bundle No.-sizes	Total per pier	No.-size	Total per pier	Size	spacing	Size	spacing	No.-size	Spacing	No.-size	Spacing	No.-size	Spacing	No.-size	Spacing
48-#57 outer 36-#43 inner	192 144	#43	40	#22	100	#22	100	2-#25	100	#25	100	#25	900 Max	2-#25	150

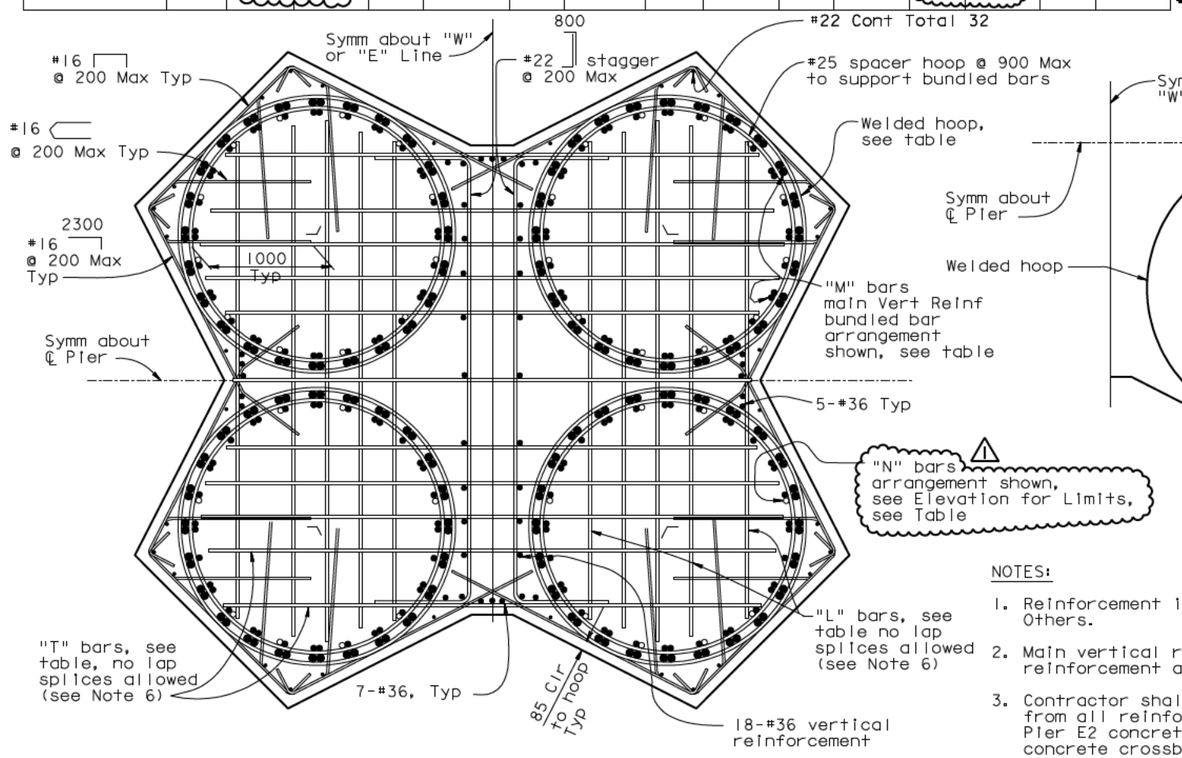

SECTION B-B
1:25

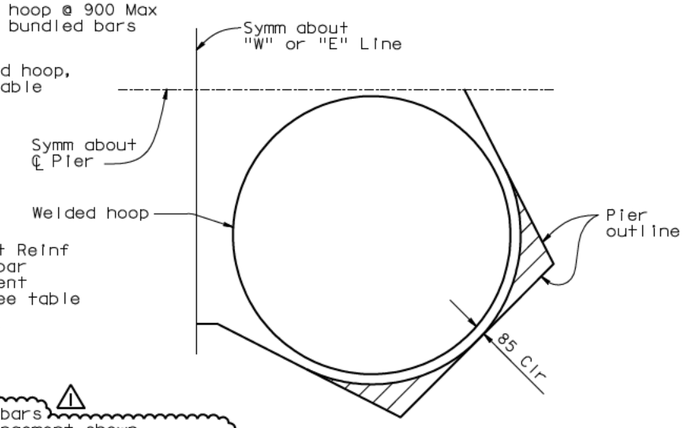

RECESS DETAIL
1:25

NOTES:

1. Reinforcement is for information only, and by Others.
2. Main vertical reinforcement and hoop reinforcement are "Ultimate" butt splices.
3. Contractor shall remove the corrosion protection from all reinforcing and shall roughen the existing Pier E2 concrete surface prior to pouring the concrete crossbeam.
4. Contractor shall remove existing continuous welded hoops down to soffit. Replace with continuous welded hoops spaced at 175 mm placed at 2% slope up to 2800 mm from soffit.
5. Refer to "Pier E2 Details No.10" sheet for main vertical reinforcement cutoff allowance.
6. Contractor shall remove existing continuous welded hoops and replace with #36 ☐ @ 175 mm placed at 2% slope. See Section F-F on "Pier E2 Detail No.4" sheet.

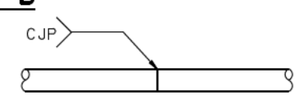

BUTT WELDED CONTINUOUS HOOP
NTS

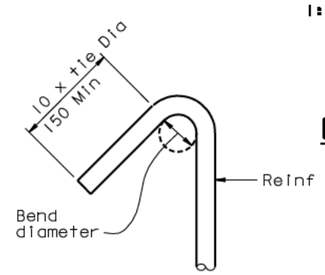

135° SEISMIC HOOK
No scale

LEGEND:

100 Recess

ALL DIMENSIONS ARE IN MILLIMETERS UNLESS OTHERWISE SHOWN

MARK	DATE	DESCRIPTIONS	BY	CH'D
1	07/21/06	E2 CAP BEAM ISD, E2T1 CCO 34	AS	NV
		REVISIONS		23

CONTRACT CHANGE ORDER NO. ____
SHEET ____ OF ____

100 % PS&E

DATE PLOTTED => 21 DEC 2007 TIME PLOTTED => 10:17:40

USERNAME => dtom

R. Valizadeh/V.Toan/Y.L./W.L./F.C.
DESIGN OVERSIGHT
SIGN OFF DATE 07/21/06

DESIGN	BY A. Sanjines	CHECKED J. Chan	
DETAILS	BY R. Xu	CHECKED J. Chan	
QUANTITIES	BY R. Xu	CHECKED C. Bernardo	

PREPARED FOR THE STATE OF CALIFORNIA DEPARTMENT OF TRANSPORTATION

R. Manzanarez
PROJECT ENGINEER

BRIDGE NO. 34-0006L/R
KILOMETER POST 13.2/13.9

SAN FRANCISCO OAKLAND BAY BRIDGE
EAST SPAN SEISMIC SAFETY PROJECT
SELF-ANCHORED SUSPENSION BRIDGE
(SUPERSTRUCTURE & TOWER)

PIER E2 DETAILS NO.2

Rev. Date: 5-18-98

ORIGINAL SCALE IN MILLIMETERS FOR REDUCED PLANS 0 10 20 30 40 50 60 70 80 90 100

CU 04
EA 0120F1

DISREGARD PRINTS BEARING EARLIER REVISION DATES

REVISION DATES (PRELIMINARY STAGE ONLY) 08/28/99 05/31/01 04/08/02 07/01/02 12/18/02 05/16/03

SHEET 94R1 OF

FILE -> I:\bb\04-012001\sas\contract plans and cco\cco\cco#23\update 12-21-07\dgn\aeplr02e-r1.dgn