MARK	DATE	DESCRIPTIONS	BY	CH'D	CCO#
1	07/21/06	W2 CAP BEAM ISD	JD	AS	23

REVISIONS

CONTRACT CHANGE ORDER NO. _____
SHEET ____ OF ____

FOR REVISIONS ONLY

NOTES:

1. For Section B-B, see "W2 Cap Beam Reinforcement Details No. 22" sheet.
2. Reinforcement labeled "T33" and "T35" placed parallel to deck.

Caltrans Metric

DIST.	COUNTY	ROUTE	KILOMETER POST TOTAL PROJECT	SHEET NO.	TOTAL SHEETS
04	SF	80	13.2/13.9	494R1	1204

REGISTERED ENGINEER - CIVIL
12-6-04
PLANS APPROVAL DATE

REGISTERED PROFESSIONAL ENGINEER John Sun No. C 54648 Exp. 12/31/05 CIVIL STATE OF CALIFORNIA

The State of California or its officers or agents shall not be responsible for the accuracy or completeness of electronic copies of this plan sheet.

T.Y. LIN / MOFFATT & NICHOL
825 BATTERY STREET
SAN FRANCISCO, CA 94111

To get to the web site, go to: http://www.dot.ca.gov

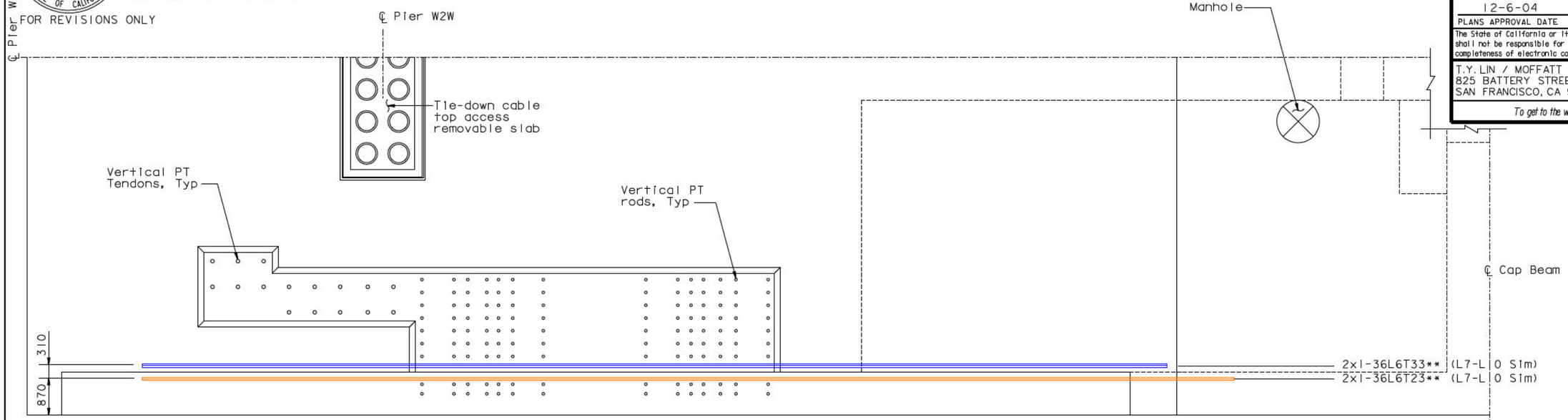

WEST FACE REINFORCEMENT-INTERIOR "A" AND INTERIOR "B" PLAN (NORTH)

(Looking East) (South Side Similar)
1:50

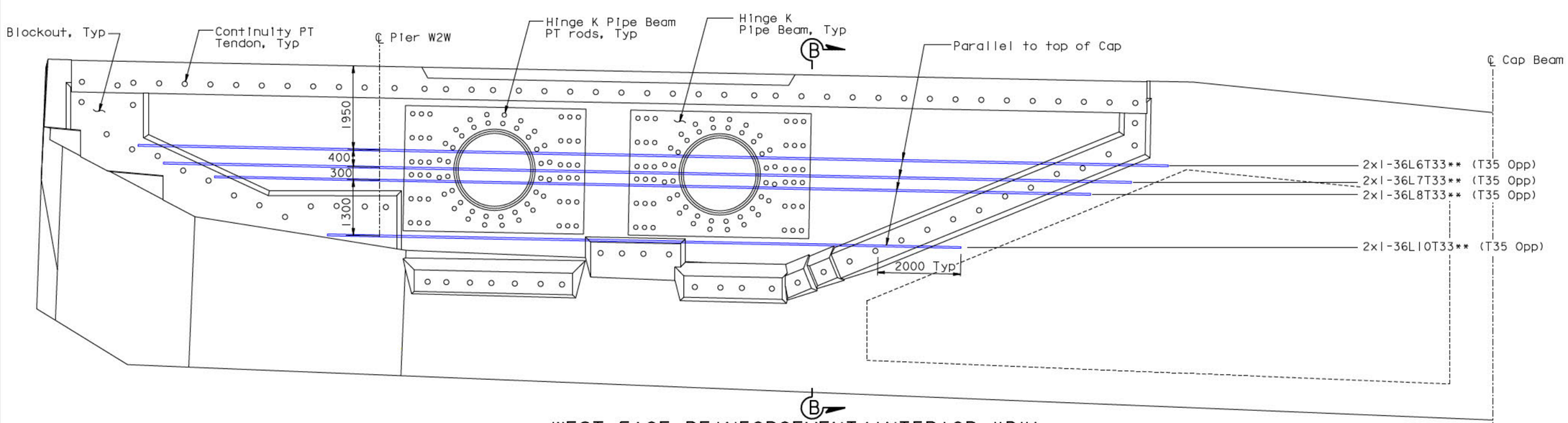

** Denotes Bars Bundled Horizontally

WEST FACE REINFORCEMENT (INTERIOR "B")

(Looking East) (South Side Similar)
1:50

ALL DIMENSIONS ARE IN MILLIMETERS UNLESS OTHERWISE SHOWN

Original Sheet Superseded

100 % PS&E

DATE PLOTTED => 07 JUN 2007 TIME PLOTTED => 14:42:47

USERNAME => ptom

R. Valizadeh/V. Toan/Y.L./W.L./F.C.
DESIGN OVERSIGHT
Ryan Valizadeh / Vong Toan / Y. Liu
SIGN OFF DATE 07/21/06

Rev. Date: 5-18-98

	BY	CHECKED	
DESIGN	J. Sun	M. Chen	
DETAILS	J. Duxbury	M. Chen	
QUANTITIES	S. Shi	D. Harrison	

PREPARED FOR THE STATE OF CALIFORNIA DEPARTMENT OF TRANSPORTATION

R. Manzanarez
PROJECT ENGINEER

BRIDGE NO. 34-0006L/R
KILOMETER POST 13.2/13.9

SAN FRANCISCO OAKLAND BAY BRIDGE
EAST SPAN SEISMIC SAFETY PROJECT
SELF-ANCHORED SUSPENSION BRIDGE
(SUPERSTRUCTURE & TOWER)

W2 CAP BEAM REINFORCEMENT DETAILS NO. 21

ORIGINAL SCALE IN MILLIMETERS FOR REDUCED PLANS 0 10 20 30 40 50 60 70 80 90 100

CU 04
EA 0120F1

DISREGARD PRINTS BEARING EARLIER REVISION DATES

REVISION DATES (PRELIMINARY STAGE ONLY) 05/24/01 04/08/02 07/01/02 12/19/02

SHEET 077R1 OF

FILE -> I:\bb\04-012001\sas\contract plans and cco\cco\cco#23\dgn\aecap20r-c.dgn