To get to the web site, go to: http://www.dot.ca.gov

MARK	DATE	DESCRIPTIONS	BY	CH'D	CCO#
1	07/21/06	W2 CAP BEAM ISD	JD	NV	23

REVISIONS

CONTRACT CHANGE ORDER NO. ____
SHEET ___ OF ___

Caltrans Metric

DIST.	COUNTY	ROUTE	KILOMETER POST TOTAL PROJECT	SHEET NO.	TOTAL SHEETS
04	SF	80	13.2/13.9	471R1	1204

REGISTERED ENGINEER - CIVIL

12-6-04
PLANS APPROVAL DATE

REGISTERED PROFESSIONAL ENGINEER John Sun No. C 54648 Exp. 12/31/05 CIVIL STATE OF CALIFORNIA

The State of California or its officers or agents shall not be responsible for the accuracy or completeness of electronic copies of this plan sheet.

T.Y. LIN / MOFFATT & NICHOL
825 BATTERY STREET
SAN FRANCISCO, CA 94111

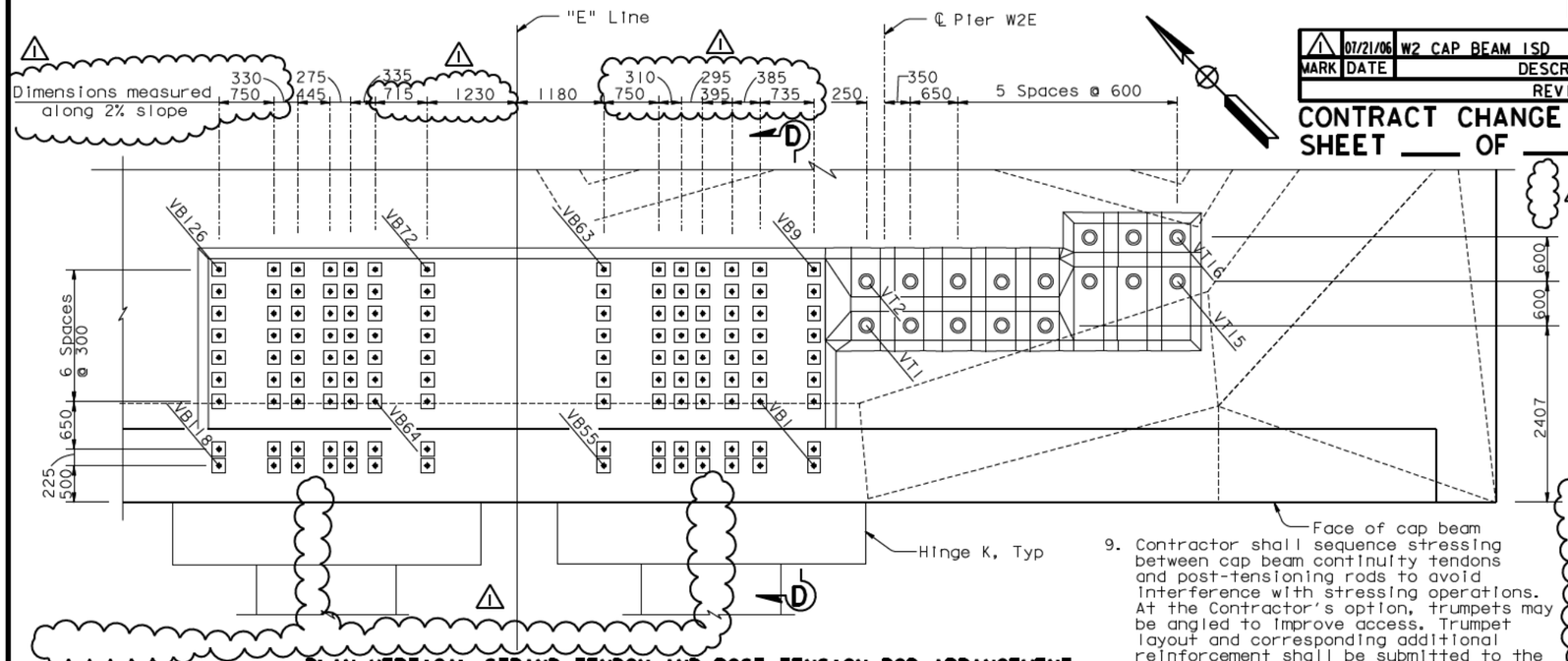

PLAN-VERTICAL STRAND TENDON AND POST-TENSION ROD ARRANGEMENT
DETAIL A
1:40

9. Contractor shall sequence stressing between cap beam continuity tendons and post-tensioning rods to avoid interference with stressing operations. At the Contractor's option, trumpets may be angled to improve access. Trumpet layout and corresponding additional reinforcement shall be submitted to the Engineer for review and approval.

10. Blockouts at the dead end are not required. At the Contractor's option, blockouts can be provided, subject to the Engineers review and approval of the blockout and reinforcement details.

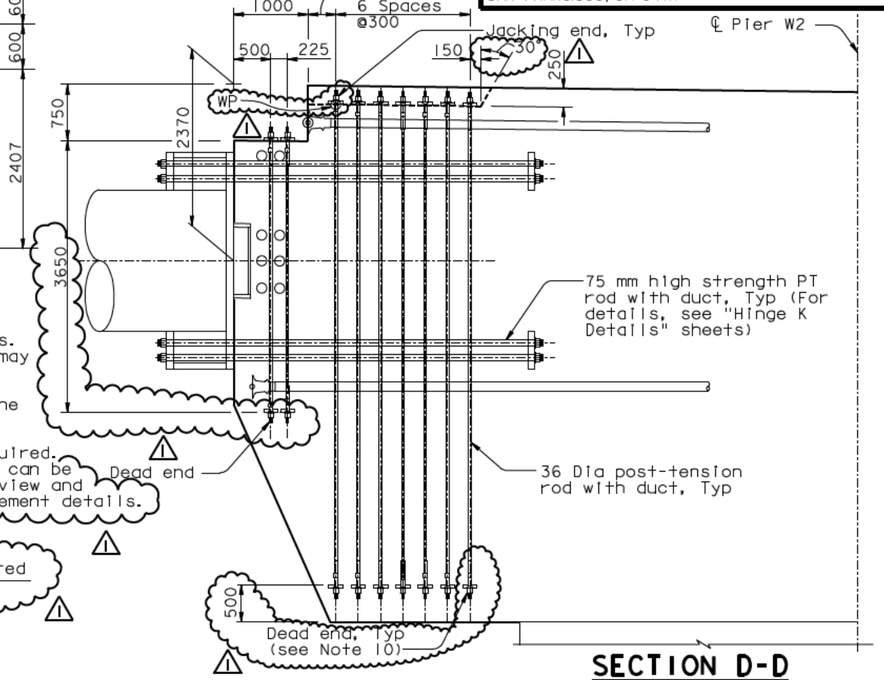

SECTION D-D
1:20 (see Note 9)

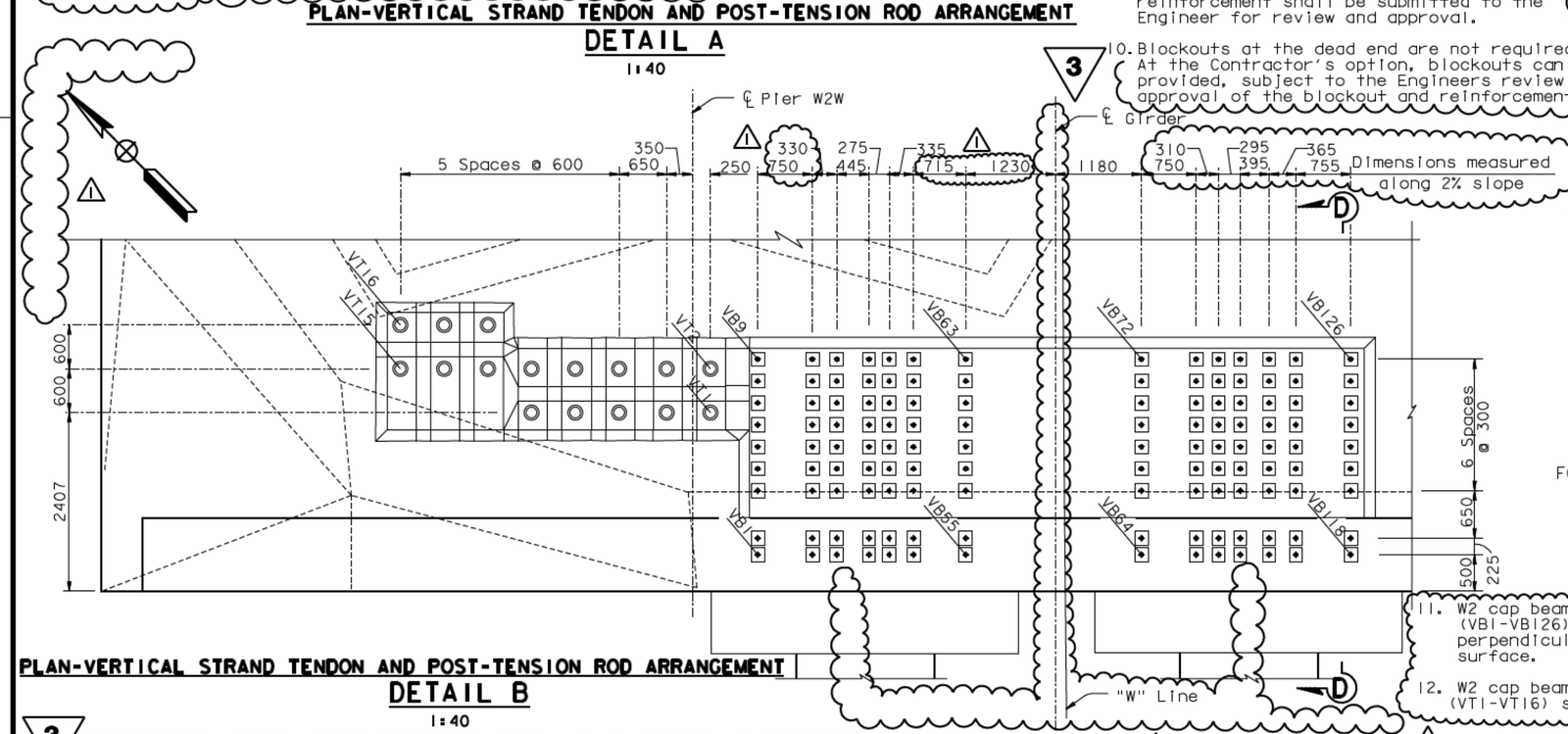

PLAN-VERTICAL STRAND TENDON AND POST-TENSION ROD ARRANGEMENT
DETAIL B
1:40

11. W2 cap beam vertical PT rods (VB1-VB126) shall be placed perpendicular to the top concrete surface.

12. W2 cap beam vertical tendons (VT1-VT16) shall be placed vertical.

REGISTERED PROFESSIONAL ENGINEER James P. Duxbury No. C 64677 Exp. 06/30/07 CIVIL STATE OF CALIFORNIA

FOR REVISIONS ONLY

NOTES:

1. For additional details, see "W2 Cap Beam Post-Tensioning Details No.5" and "W2 Cap Beam Post-Tensioning Details No.7" sheets.
2. Jacking force in the W2 cap beam vertical tendons (VT1-VT16) shall be 2350 kN typical.
3. Jacking force in the W2 cap beam vertical PT rods (VB1-VB126) shall be 734 kN typical.
4. For hinge K details, see "Hinge K Details" sheets.
5. W2 cap beam vertical PT rods are ASTM A722 high strength 36 Dia rods (fu=1030 MPa), with standard galvanized steel ducts, unless specified otherwise.
6. W2 cap beam vertical tendons are ASTM A416 Grade 270 (fu=1860 MPa), low relaxation, 12-15 Dia seven wire strand PT, unless specified otherwise.
7. For additional prestressing details, see "Prestressing Notes" sheet.
8. For general stressing sequence, see "Pier W2 Construction Sequence" sheet.

3 REVISED PER ADDENDUM NO. 3 DATED NOVEMBER 7, 2005

ALL DIMENSIONS ARE IN MILLIMETERS UNLESS OTHERWISE SHOWN

100 % PS&E

TIME PLOTTED => 09:28:52
DATE PLOTTED => 10 MAY 2007
USERNAME => vignatovs

R. Valizadeh/V.Toan/Y.L./W.L./F.C.
DESIGN OVERSIGHT
SIGN OFF DATE 07/21/06

	BY	CHECKED
DESIGN	J. Sun	M. Chen
DETAILS	J. Duxbury	M. Chen
QUANTITIES	S. Shi	D. Harrison

PREPARED FOR THE STATE OF CALIFORNIA DEPARTMENT OF TRANSPORTATION

R. Manzanarez
PROJECT ENGINEER

BRIDGE NO. 34-0006L/R
KILOMETER POST 13.2/13.9

SAN FRANCISCO OAKLAND BAY BRIDGE
EAST SPAN SEISMIC SAFETY PROJECT
SELF-ANCHORED SUSPENSION BRIDGE (SUPERSTRUCTURE & TOWER)

W2 CAP BEAM POST-TENSIONING DETAILS NO.10

Rev. Date: 5-18-98

ORIGINAL SCALE IN MILLIMETERS FOR REDUCED PLANS 0 10 20 30 40 50 60 70 80 90 100

CU 04
EA 0120F1

DISREGARD PRINTS BEARING EARLIER REVISION DATES

REVISION DATES (PRELIMINARY STAGE ONLY) 08/08/99 05/31/01 08/08/02 07/24/02 12/18/02 10/13/05

SHEET 054R1 OF

FILE -> I:\bb\04-012001\sas\contract plans and cco\cco\cco#23\decpt10.dgn