| DIST. | COUNTY | ROUTE | KILOMETER POST TOTAL PROJECT | SHEET NO. | TOTAL SHEETS |
|---|---|---|---|---|---|
| 04 | SF | 80 | 13.2/13.9 | 773R1 | 1204 |

REGISTERED ENGINEER - CIVIL

12-6-04
PLANS APPROVAL DATE

REGISTERED PROFESSIONAL ENGINEER John Sun No. C 54648 Exp. 12/31/05 CIVIL STATE OF CALIFORNIA

The State of California or its officers or agents shall not be responsible for the accuracy or completeness of electronic copies of this plan sheet.

T.Y. LIN / MOFFATT & NICHOL
825 BATTERY STREET
SAN FRANCISCO, CA 94111

*To get to the web site, go to: http://www.dot.ca.gov*

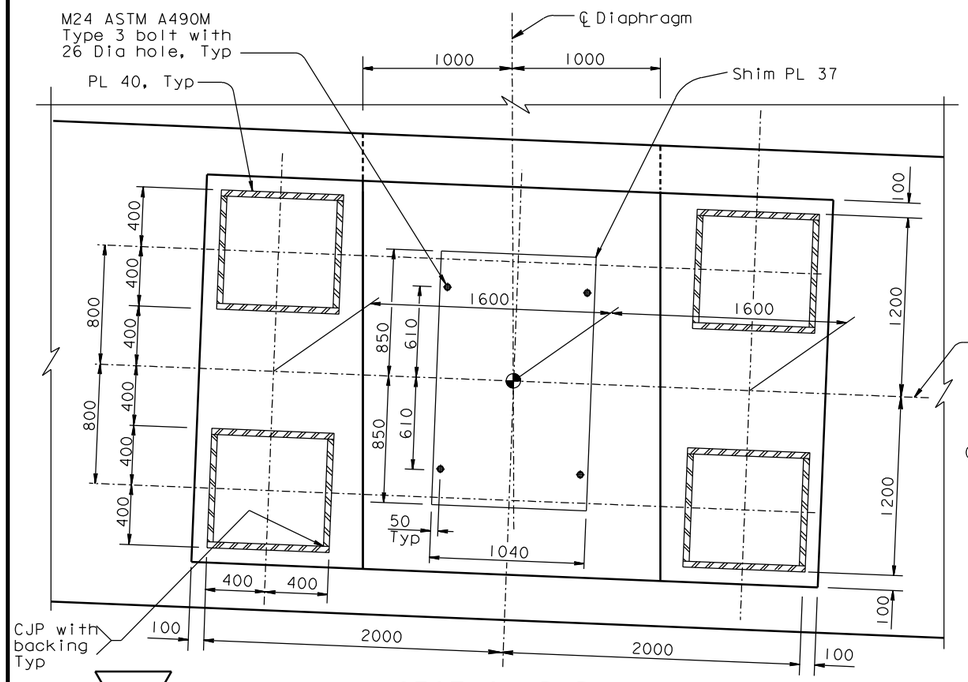


## SECTION D-D
1:20

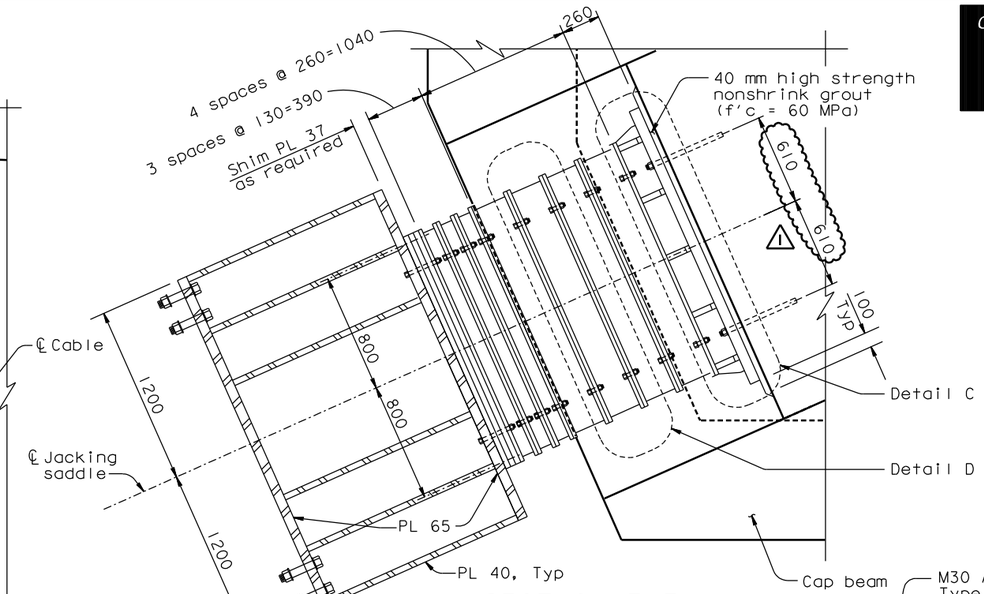


## SECTION F-F
1:20

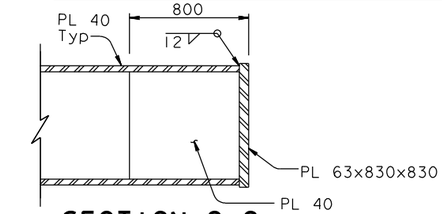


## SECTION G-G
1:20

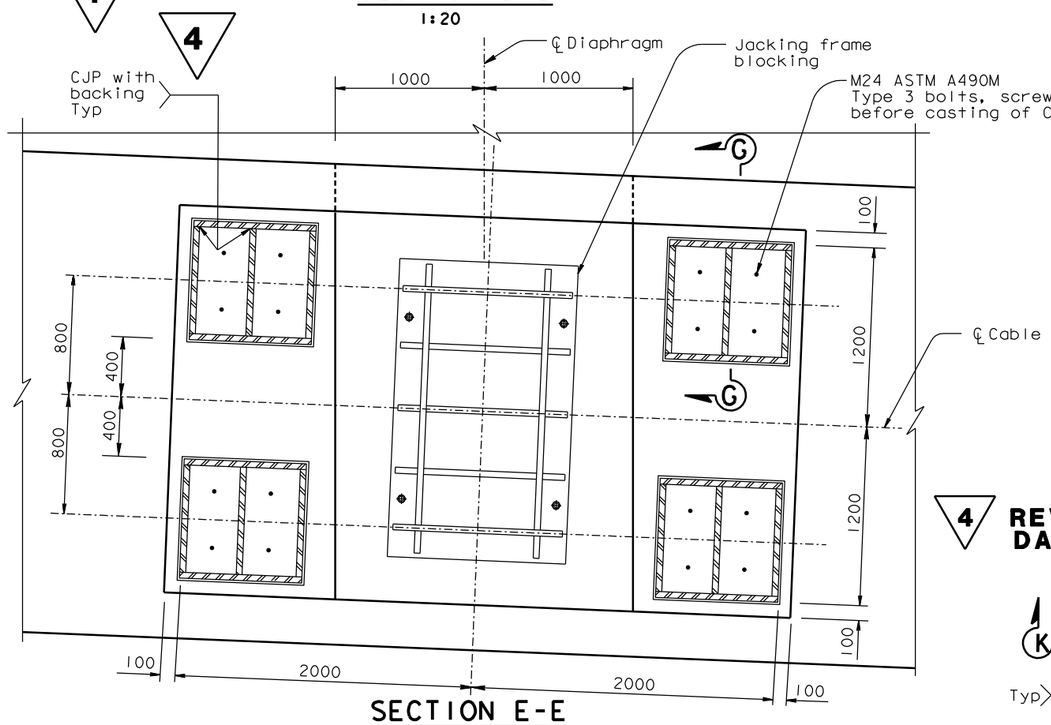


## SECTION E-E
1:20

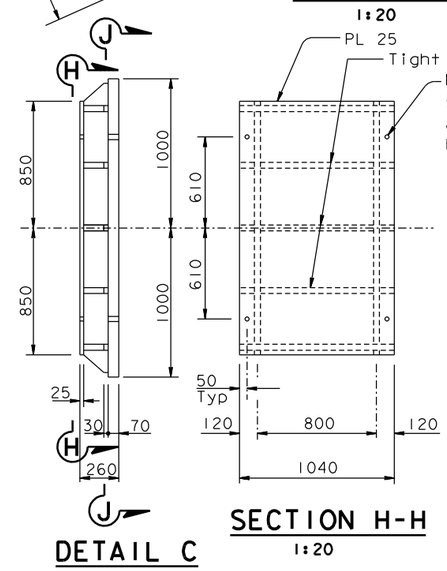


## DETAIL C
1:20

## SECTION H-H
1:20

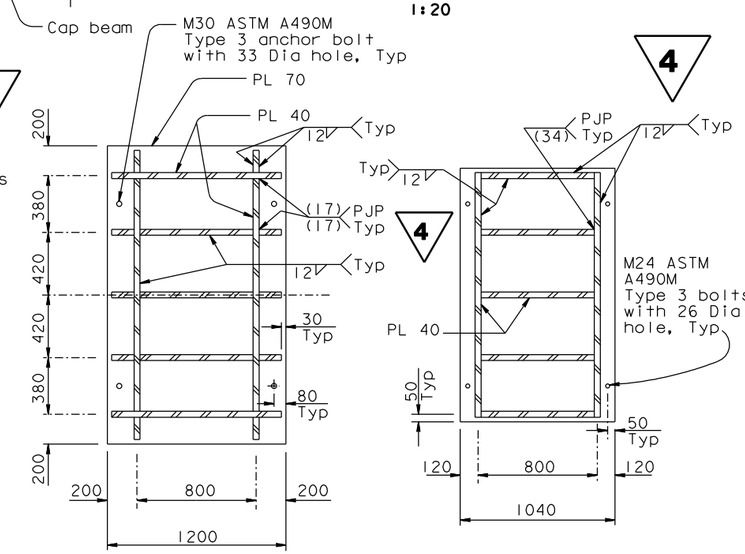


## SECTION J-J
1:20

## SECTION K-K
1:20

**4 REVISED PER ADDENDUM NO. 4 DATED DECEMBER 9, 2005**

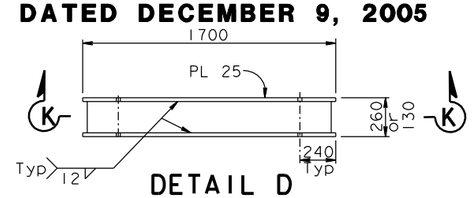


## DETAIL D
1:20

REGISTERED PROFESSIONAL ENGINEER James P. Duxbury No. C 64677 Exp. 06/30/07 CIVIL STATE OF CALIFORNIA

FOR REVISIONS ONLY

| MARK | DATE | DESCRIPTIONS | BY | CH'D | CCO# |
|---|---|---|---|---|---|
| 1 | 07/21/06 | W2 CAP BEAM ISD | JD | NV | 23 |

REVISIONS

CONTRACT CHANGE ORDER NO. ____
SHEET ___ OF ___

NOTES:

1. For additional details, see "West Jacking Frame Details No.1" sheet.

ALL DIMENSIONS ARE IN MILLIMETERS UNLESS OTHERWISE SHOWN

R. Valizadeh/V. Toan/Y.L./W.L./F.C.
DESIGN OVERSIGHT
Reza Valizadeh / Vong D. Toan / Y. Liu
SIGN OFF DATE 07/21/06

| | | | |
|---|---|---|---|
| DESIGN | BY J. Sun | CHECKED T. McMeans | |
| DETAILS | BY J. Duxbury | CHECKED T. McMeans | |
| QUANTITIES | BY J. Duxbury | CHECKED S. Shi | |

**PREPARED FOR THE STATE OF CALIFORNIA DEPARTMENT OF TRANSPORTATION**

R. Manzanarez
PROJECT ENGINEER

BRIDGE NO. 34-0006L/R
KILOMETER POST 13.2/13.9

**SAN FRANCISCO OAKLAND BAY BRIDGE**
**EAST SPAN SEISMIC SAFETY PROJECT**
**SELF-ANCHORED SUSPENSION BRIDGE (SUPERSTRUCTURE & TOWER)**

# WEST JACKING FRAME DETAILS NO. 2

Rev. Date: 5-18-98

ORIGINAL SCALE IN MILLIMETERS FOR REDUCED PLANS 0 10 20 30 40 50 60 70 80 90 100

CU 04
EA 0120F1

DISREGARD PRINTS BEARING EARLIER REVISION DATES

REVISION DATES (PRELIMINARY STAGE ONLY) 08/08/99 05/31/01 04/08/02 07/01/02 12/18/02 11/13/05

SHEET 356R1 OF

FILE => I:\bb\04-012001\sas\contract plans and cco\cco\cco#23\agsdd04d.dgn

100 % PS&E

USERNAME => visitor DATE PLOTTED => 28 MAR 2007 TIME PLOTTED => 10:15:40