| DIST. | COUNTY | ROUTE | KILOMETER POST TOTAL PROJECT | SHEET NO. | TOTAL SHEETS |
|---|---|---|---|---|---|
| 04 | SF | 80 | 13.2/13.9 | 517R1 | 1204 |

Caltrans Metric

REGISTERED ENGINEER - CIVIL

12-6-04
PLANS APPROVAL DATE

REGISTERED PROFESSIONAL ENGINEER Alex E. Sanjines No. C 051153 Exp. 9/30/07 CIVIL STATE OF CALIFORNIA

*The State of California or its officers or agents shall not be responsible for the accuracy or completeness of electronic copies of this plan sheet.*

T.Y. LIN / MOFFATT & NICHOL
825 BATTERY STREET
SAN FRANCISCO, CA 94111

*Caltrans now has a web site! To get to the web site, go to: http://www.dot.ca.gov*

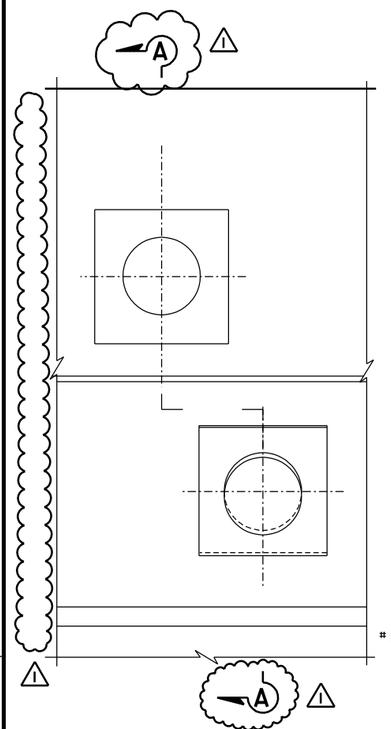


DETAIL A
NTS

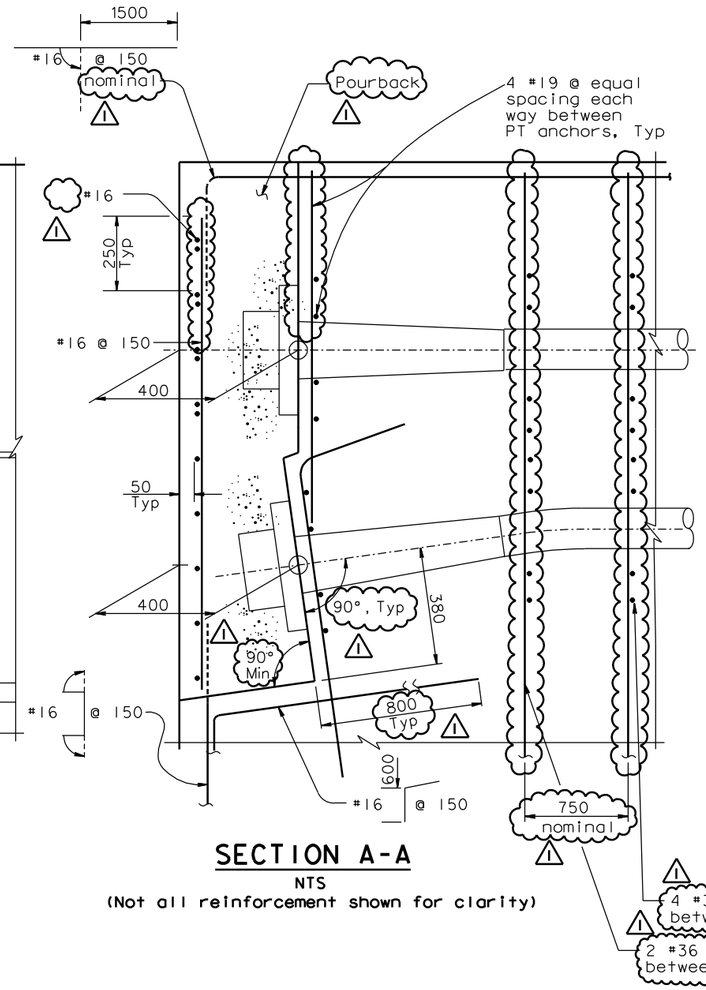


SECTION A-A
NTS
(Not all reinforcement shown for clarity)

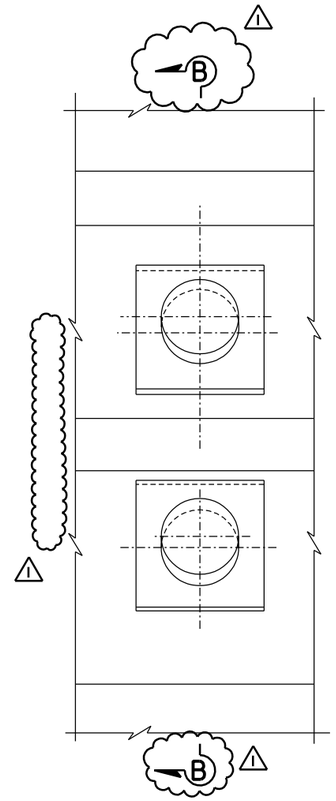


DETAIL B
NTS

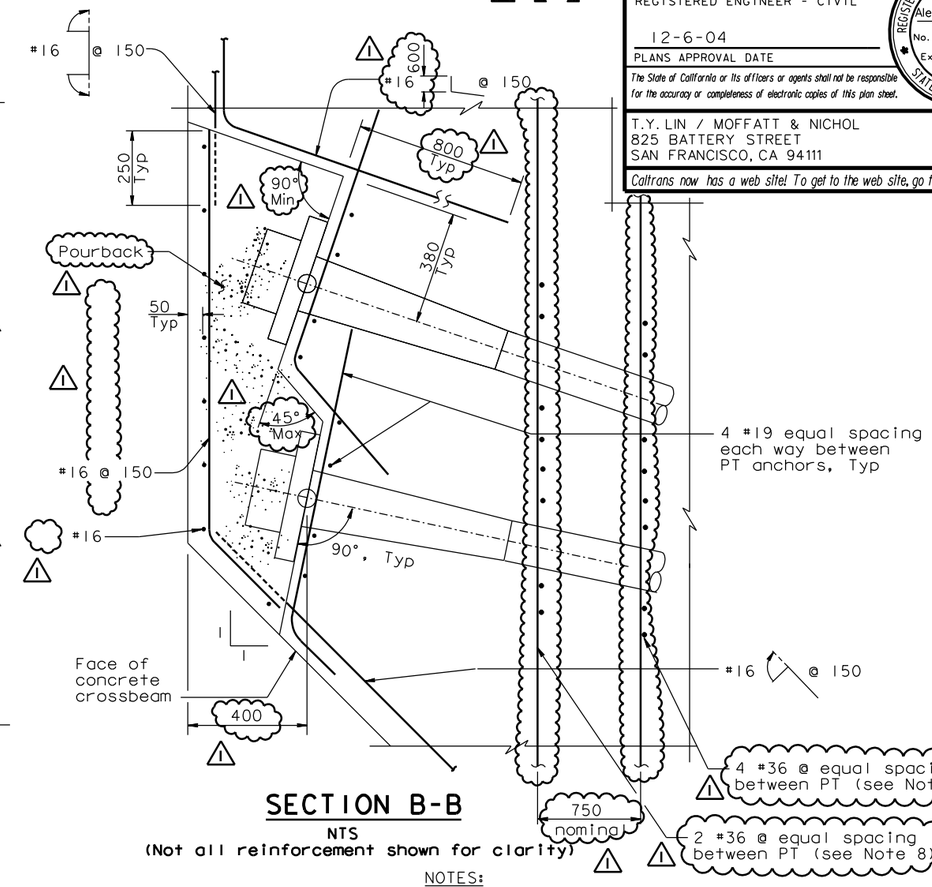


SECTION B-B
NTS
(Not all reinforcement shown for clarity)

NOTES:

1. For PT tendon plans and crossbeam elevation, see "Pier E2 Details No.5" sheet.
2. For pier E2 column elevation, see "Pier E2 Details No.2" sheet.
3. All PT tendons are 55-15 Dia.
4. Local confining reinforcement (not shown for clarity) per tendon anchor shall be provided by PT hardware supplier.
5. For additional prestressing details, see "Prestressing Notes" sheet.
6. Block-out geometry reflects standard post-tensioning industry requirements. Actual post-tensioning system dimensions may vary; final block-out geometry shall be reviewed and approved by the Engineer.
7. Post-tensioning anchorage details reflect industry standard geometry. Actual dimensions may vary depending on supplier. It shall be Contractor's responsibility to accomodate the actual system to plan geometry.
8. Contractor may vary spacing and size to clear other reinforcement, such that the equivalent steel is provided.

Original Details Superseded

100% PS&E

| MARK | DATE | DESCRIPTIONS | BY | CH'D | CCO# |
|---|---|---|---|---|---|
| 1 | 07/21/06 | E2 CAP BEAM ISD | AS | NV | 23 |

REVISIONS

CONTRACT CHANGE ORDER NO. _____
SHEET ____ OF ____

ALL DIMENSIONS ARE IN MILLIMETERS UNLESS OTHERWISE SHOWN

R. Valizadeh/V. Toan/Y.L./W.L./F.C.
DESIGN OVERSIGHT
SIGN OFF DATE 07/21/06

Rev. Date: 5-18-98

| | BY | CHECKED |
|---|---|---|
| DESIGN | A. Sanjines | J. Chan |
| DETAILS | R. Xu | J. Chan |
| QUANTITIES | C. Bernardo | B. Mason |

ORIGINAL SCALE IN MILLIMETERS FOR REDUCED PLANS 0 10 20 30 40 50 60 70 80 90 100

**PREPARED FOR THE STATE OF CALIFORNIA DEPARTMENT OF TRANSPORTATION**

R. Manzanarez
PROJECT ENGINEER

CU 04
EA 0120F1

BRIDGE NO. 34-0006L/R
KILOMETER POST 13.2/13.9

**SAN FRANCISCO OAKLAND BAY BRIDGE EAST SPAN SEISMIC SAFETY PROJECT**
**SELF-ANCHORED SUSPENSION BRIDGE (SUPERSTRUCTURE & TOWER)**
# PIER E2 DETAILS NO. 8

DISREGARD PRINTS BEARING EARLIER REVISION DATES 05/14/01 04/08/02 07/01/02 12/19/02

SHEET 100R1 OF

FILE => I:\bb\04-012001\sas\contract plans and cco\cco\cco#23\dgn\aepir06e.dgn

USERNAME => ptom DATE PLOTTED => 17 MAY 2007 TIME PLOTTED => 15:44:17