DIST.	COUNTY	ROUTE	KILOMETER POST TOTAL PROJECT	SHEET NO.	TOTAL SHEETS
04	SF	80	13.2/13.9	500R1	1204

Caltrans Metric

REGISTERED ENGINEER - CIVIL

12-6-04
PLANS APPROVAL DATE

REGISTERED PROFESSIONAL ENGINEER John Sun No. C 54648 Exp. 12/31/05 CIVIL STATE OF CALIFORNIA

The State of California or its officers or agents shall not be responsible for the accuracy or completeness of electronic copies of this plan sheet.

T.Y. LIN / MOFFATT & NICHOL
825 BATTERY STREET
SAN FRANCISCO, CA 94111

Caltrans now has a web site! To get to the web site, go to: http://www.dot.ca.gov

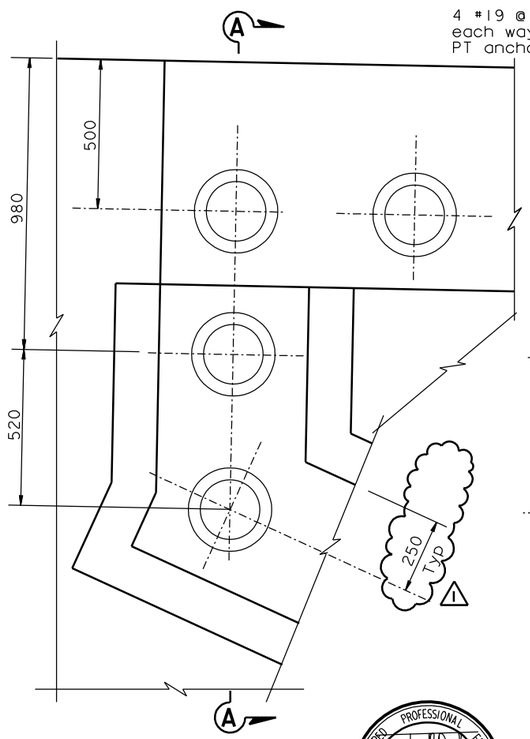

DETAIL A
1:10

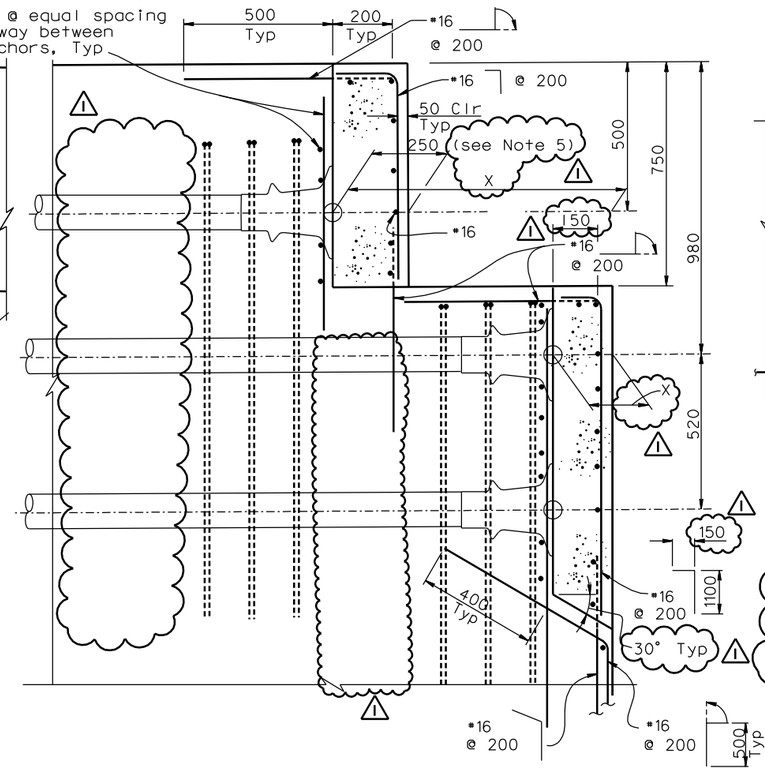

SECTION A-A
1:10

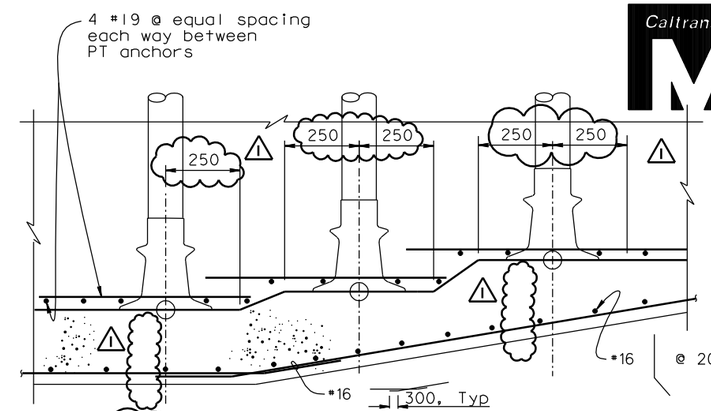

SECTION D-D
1:10

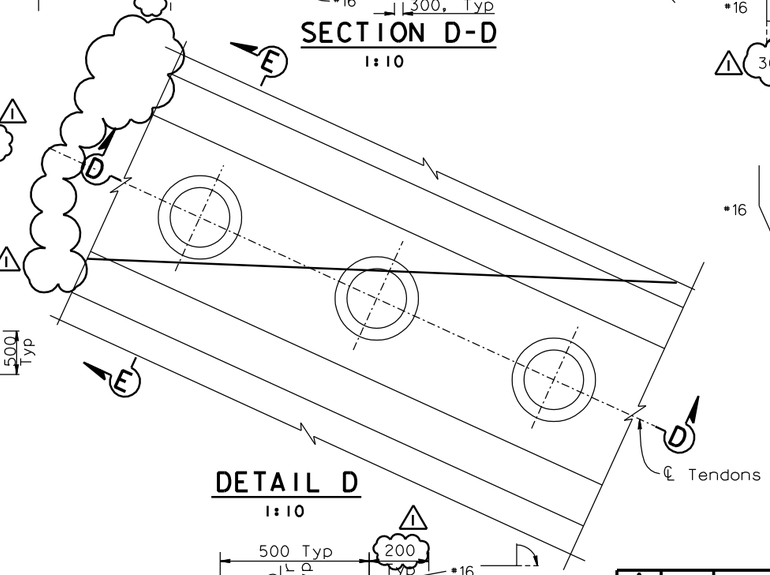

DETAIL D
1:10

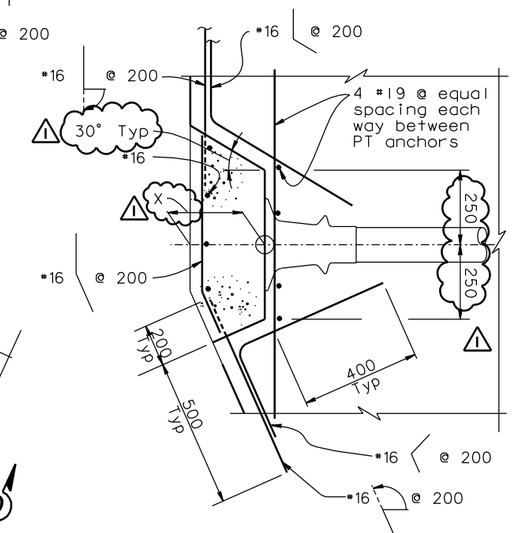

SECTION E-E
1:10

FOR REVISIONS ONLY

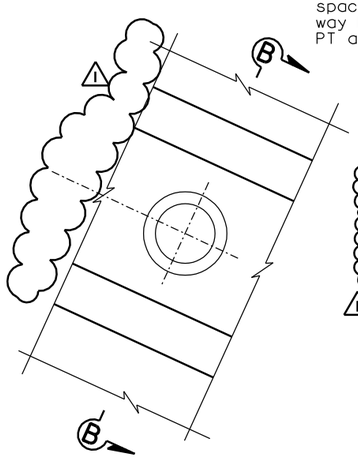

DETAIL B
1:10

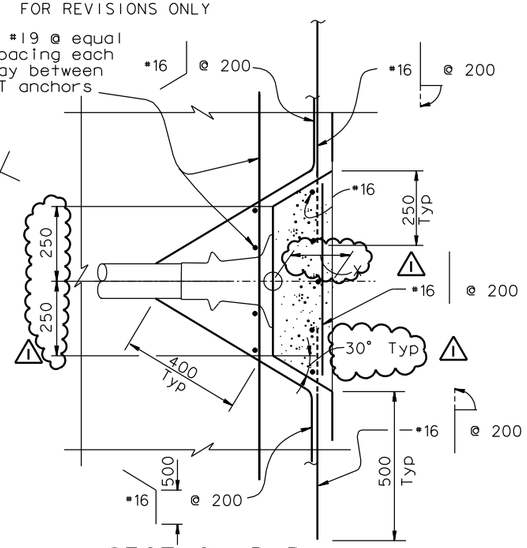

SECTION B-B
1:10

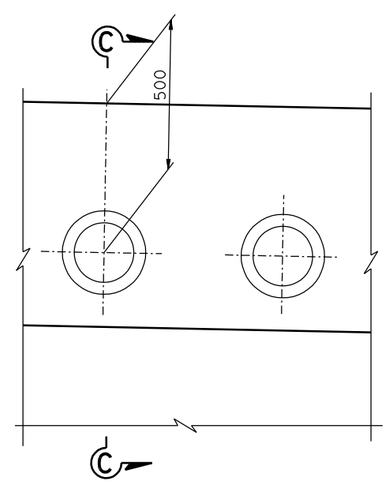

DETAIL C
1:10

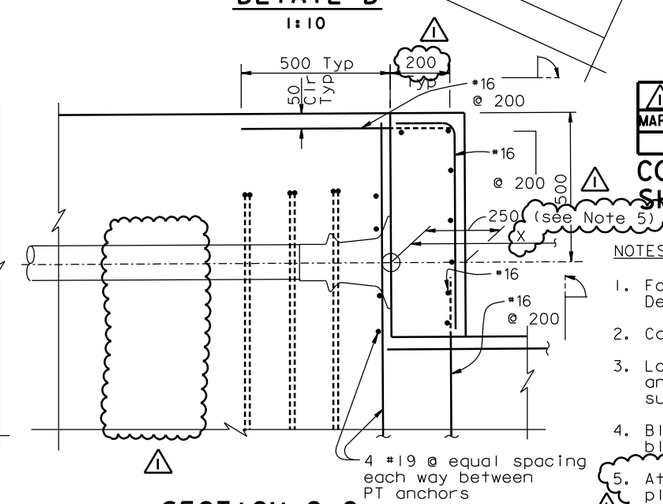

SECTION C-C
1:10

ALL DIMENSIONS ARE IN MILLIMETERS UNLESS OTHERWISE SHOWN

MARK	DATE	DESCRIPTIONS	BY	CH'D	CCO#
1	07/21/06	W2 CAP BEAM ISD	JD	NV	23

REVISIONS

CONTRACT CHANGE ORDER NO. ____
SHEET ___ OF ___

NOTES:

1. For additional details, see "W2 Cap Beam Blockout Details No.1" sheet.
2. Cap beam reinforcement not shown for clarity.
3. Local confining spiral reinforcement per tendon anchors shall be provided by PT tendon hardware supplier.
4. Blockouts on the cap beam south face shown, blockouts on the cap beam north face similar.
5. At Contractor's option, concrete blockouts can be placed at the same time as the Hinge K Expansion Joint consolidated concrete.

100 % PS&E

TIME PLOTTED => 11:03:04
DATE PLOTTED => 10 MAY 2007
USERNAME => vignatovsk

SAN FRANCISCO OAKLAND BAY BRIDGE
EAST SPAN SEISMIC SAFETY PROJECT
SELF-ANCHORED SUSPENSION BRIDGE
(SUPERSTRUCTURE & TOWER)

W2 CAP BEAM BLOCKOUT DETAILS NO. 3

R. Valizadeh/V. Toan/Y.L./W.L./F.C.
DESIGN OVERSIGHT
Ryan Valizadeh / Vong Toan / Y. Liu
SIGN OFF DATE 07/21/06

Rev. Date: 5-18-98

DESIGN	BY J. Sun	CHECKED M. Chen	
DETAILS	BY J. Duxbury	CHECKED M. Chen	
QUANTITIES	BY S. Shi	CHECKED D. Harrison	

PREPARED FOR THE STATE OF CALIFORNIA DEPARTMENT OF TRANSPORTATION

R. Manzanarez
PROJECT ENGINEER

BRIDGE NO. 34-0006L/R
KILOMETER POST 13.2/13.9

CU 04
EA 0120F1

ORIGINAL SCALE IN MILLIMETERS FOR REDUCED PLANS 0 10 20 30 40 50 60 70 80 90 100

DISREGARD PRINTS BEARING EARLIER REVISION DATES → 08/08/99 05/31/01 04/08/02 07/01/02 12/19/02

REVISION DATES (PRELIMINARY STAGE ONLY)

SHEET 83R1 OF

FILE => I:\bb\04-012001\sas\contract plans and cco\cco\cco#23\aecbb03.dgn