| DIST. | COUNTY | ROUTE | KILOMETER POST TOTAL PROJECT | SHEET NO. | TOTAL SHEETS |
|---|---|---|---|---|---|
| 04 | SF | 80 | 13.2/13.9 | 460R1 | 1204 |

REGISTERED ENGINEER - CIVIL

12-6-04
PLANS APPROVAL DATE

REGISTERED PROFESSIONAL ENGINEER John Sun No. C 54648 Exp. 12/31/05 CIVIL STATE OF CALIFORNIA

*The State of California or its officers or agents shall not be responsible for the accuracy or completeness of electronic copies of this plan sheet.*

T.Y. LIN / MOFFATT & NICHOL
825 BATTERY STREET
SAN FRANCISCO, CA 94111

*Caltrans now has a web site! To get to the web site, go to: http://www.dot.ca.gov*

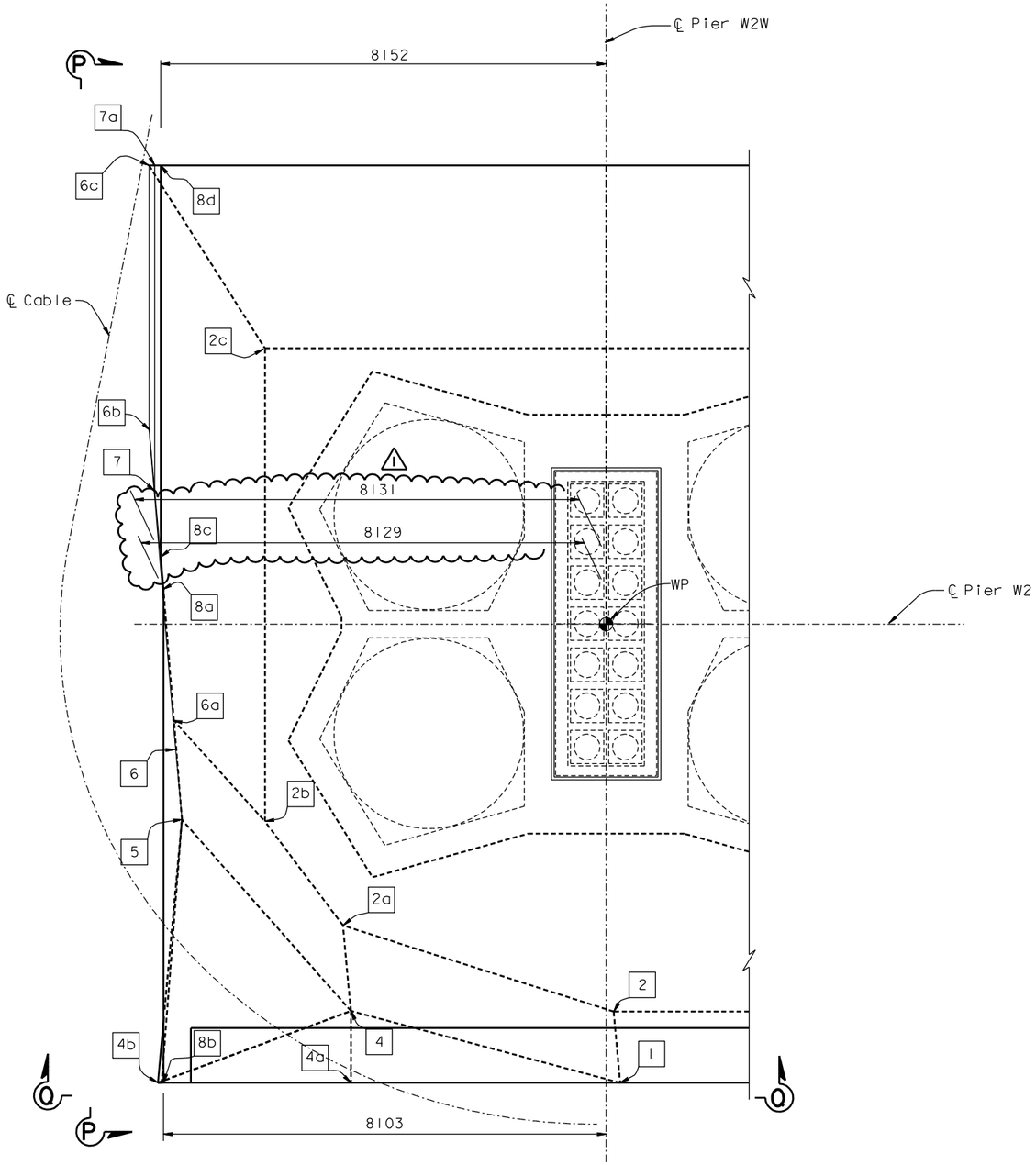


## DETAIL B (PARTIAL PLAN)

1:50

REGISTERED PROFESSIONAL ENGINEER James P. Duxbury No. C 64677 Exp. 06/30/07 CIVIL STATE OF CALIFORNIA

FOR REVISIONS ONLY

| MARK | DATE | DESCRIPTIONS | BY | CH'D | CCO# |
|---|---|---|---|---|---|
| 1 | 07/21/06 | W2 CAP BEAM ISD | JD | NV | 23 |

REVISIONS

CONTRACT CHANGE ORDER NO. _____
SHEET ____ OF ____

LEGEND:

[-] Indicates Cap Beam Dimensions Control Point

NOTES:

1. For additional details, see "W2 Cap Beam Dimension Details No.1" sheet.
2. For Sections P-P and Q-Q, see "W2 Cap Beam Dimension Details No.8" sheet.

ALL DIMENSIONS ARE IN MILLIMETERS UNLESS OTHERWISE SHOWN

R. Valizadeh/V. Toan/Y.L./W.L./F.C.
DESIGN OVERSIGHT
SIGN OFF DATE 07/21/06

| | BY | CHECKED |
|---|---|---|
| DESIGN | J. Sun | M. Chen |
| DETAILS | S. Shi | M. Chen |
| QUANTITIES | S. Shi | D. Harrison |

PREPARED FOR THE STATE OF CALIFORNIA DEPARTMENT OF TRANSPORTATION

R. Manzanarez
PROJECT ENGINEER

BRIDGE NO. 34-0006L/R
KILOMETER POST 13.2/13.9

SAN FRANCISCO OAKLAND BAY BRIDGE
EAST SPAN SEISMIC SAFETY PROJECT
SELF-ANCHORED SUSPENSION BRIDGE
(SUPERSTRUCTURE & TOWER)

# W2 CAP BEAM DIMENSION DETAILS NO. 7

Rev. Date: 5-18-98

ORIGINAL SCALE IN MILLIMETERS FOR REDUCED PLANS 0 10 20 30 40 50 60 70 80 90 100

CU 04
EA 0120F1

DISREGARD PRINTS BEARING EARLIER REVISION DATES

REVISION DATES (PRELIMINARY STAGE ONLY): 05/15/99 08/02/99 05/24/01 04/08/02 07/01/02 12/19/02

SHEET 043R1 OF

FILE => I:\bb\04-012001\sas\contract plans and cco\cco\cco#23\aecap06.dgn

USERNAME => visitor DATE PLOTTED => 27 MAR 2007 TIME PLOTTED => 16:11:33

100% PS&E