MARK	DATE	DESCRIPTIONS	BY	CH'D	CCO#
1	07/21/06	W2 CAP BEAM ISD	JD	NV	23

REVISIONS

CONTRACT CHANGE ORDER NO. ____
SHEET ___ OF ___

FOR REVISIONS ONLY

REGISTERED PROFESSIONAL ENGINEER James P. Duxbury No. C 64677 Exp. 06/30/07 CIVIL STATE OF CALIFORNIA

Caltrans Metric

DIST.	COUNTY	ROUTE	KILOMETER POST TOTAL PROJECT	SHEET NO.	TOTAL SHEETS
04	SF	80	13.2/13.9	451R1	1204

REGISTERED ENGINEER - CIVIL

12-6-04
PLANS APPROVAL DATE

REGISTERED PROFESSIONAL ENGINEER John Sun No. C 54648 Exp. 12/31/05 CIVIL STATE OF CALIFORNIA

The State of California or its officers or agents shall not be responsible for the accuracy or completeness of electronic copies of this plan sheet.

T.Y. LIN / MOFFATT & NICHOL
825 BATTERY STREET
SAN FRANCISCO, CA 94111

Caltrans now has a web site! To get to the web site, go to: http://www.dot.ca.gov

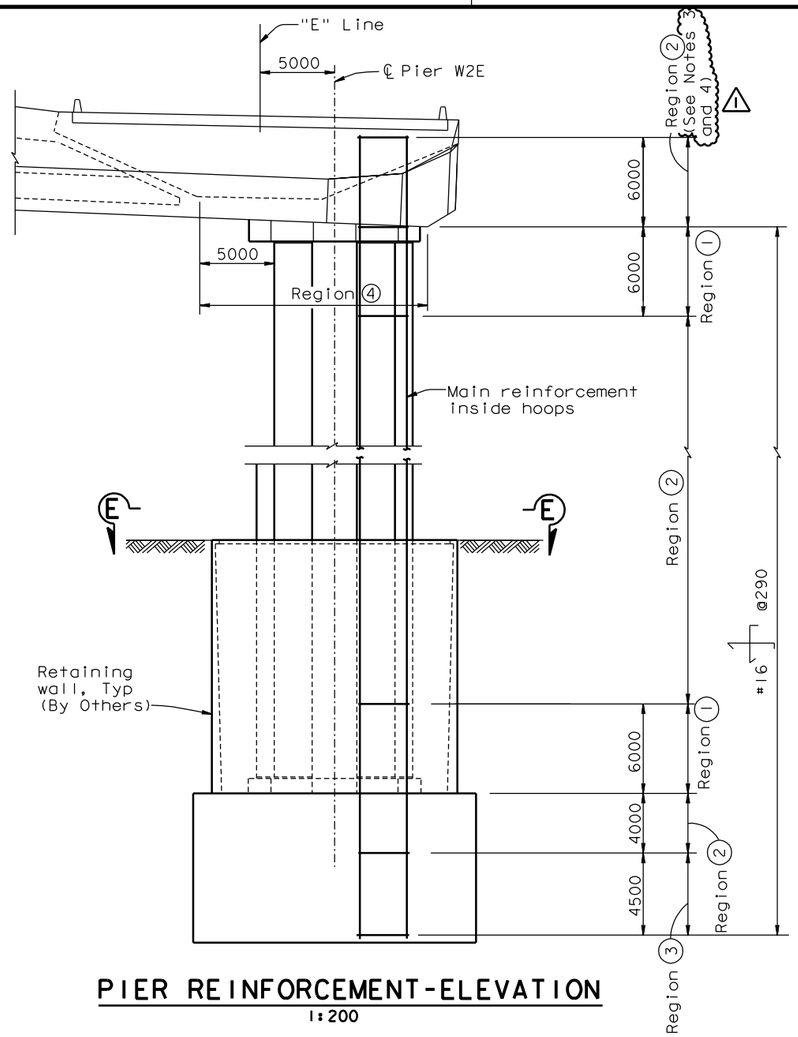

PIER REINFORCEMENT-ELEVATION
1:200

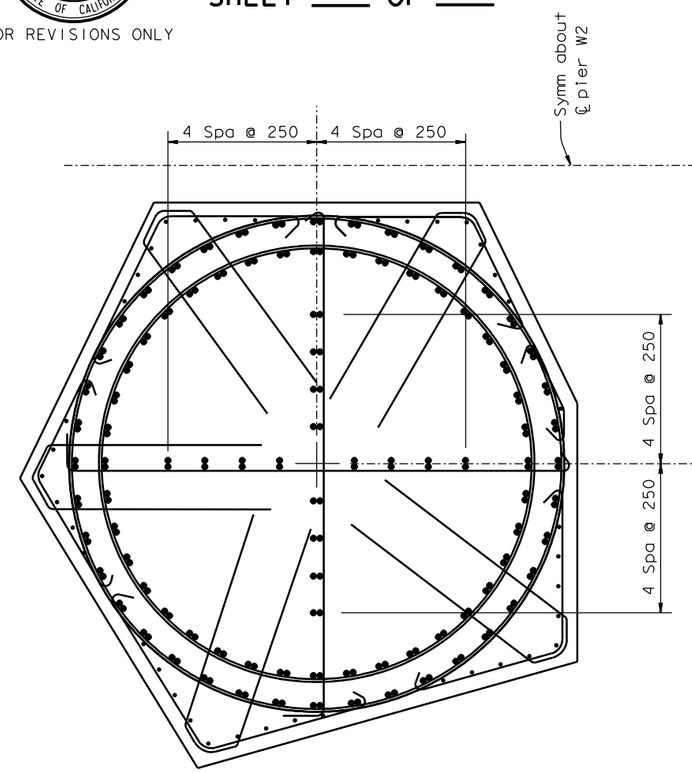

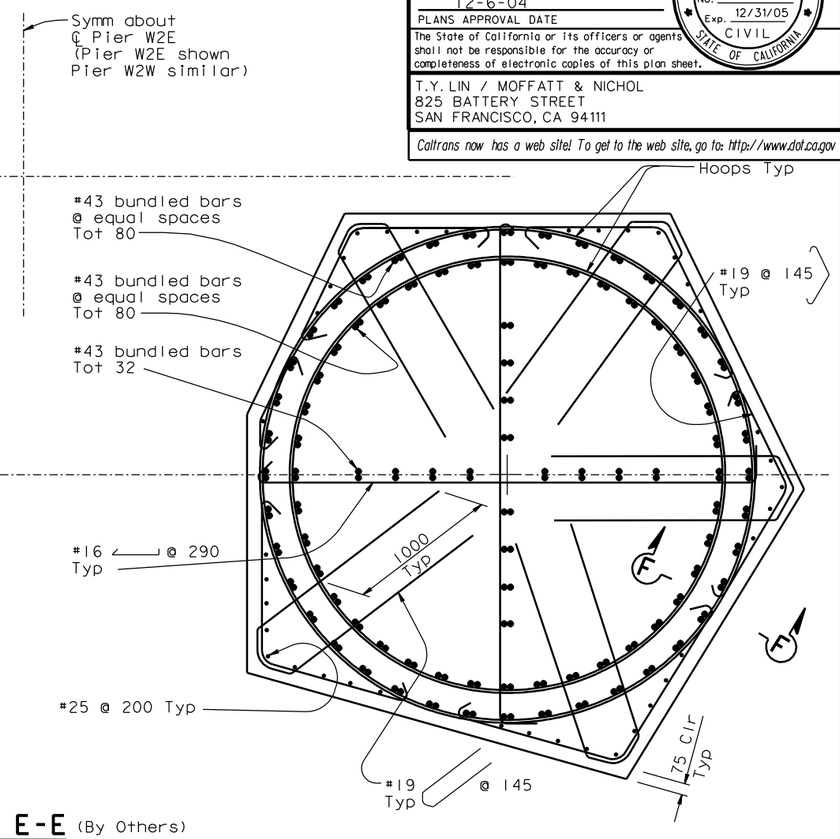

SECTION E-E (By Others)
1:20

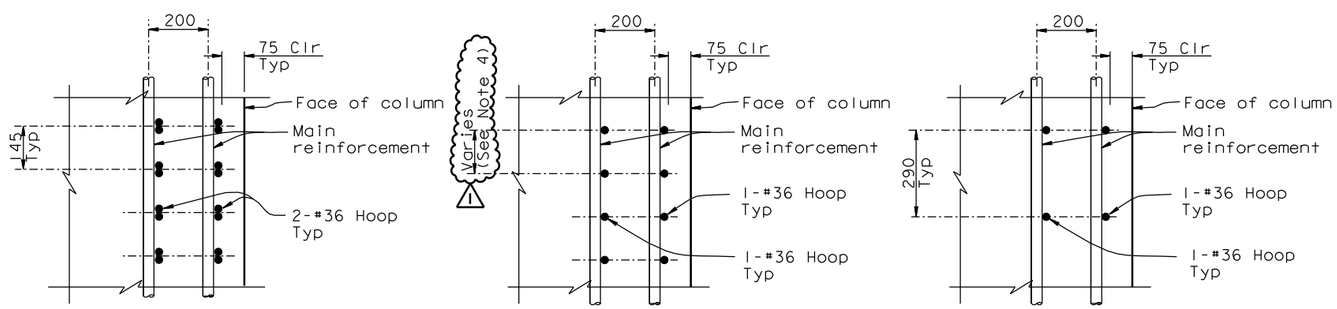

At Region 1 (By Others)

At Region 2 (By Others)

At Region 3 (By Others)

SECTION F-F
1:10

NOTES:

1. Reinforcement is for information only, and by Others.
2. Main reinforcement and hoop reinforcement are "Ultimate" butt splices.
3. Contractor shall remove the corrosion protection from all reinforcing above the pier top slab and shall roughen the existing Pier W2 concrete surface to a minimum of 5 mm amplitude prior to pouring the W2 cap beam concrete.
4. Hoops shall be removed and replaced to facilitate placement of W2 cap beam reinforcement per "W2 Cap Beam Reinforcement Details" sheets.
5. No splices permitted in region 4.

ALL DIMENSIONS ARE IN MILLIMETERS UNLESS OTHERWISE SHOWN

SAN FRANCISCO OAKLAND BAY BRIDGE
EAST SPAN SEISMIC SAFETY PROJECT
SELF-ANCHORED SUSPENSION BRIDGE
(SUPERSTRUCTURE & TOWER)

PIER W2 DETAILS NO. 5

R. Valizadeh/V. Toan/Y.L./W.L./F.C.
DESIGN OVERSIGHT
SIGN OFF DATE 07/21/06

Rev. Date: 5-18-98

	BY	CHECKED
DESIGN	J. Sun	J. Leventini
DETAILS	J. Duxbury	J. Leventini
QUANTITIES	J. Duxbury	S. Shi

PREPARED FOR THE STATE OF CALIFORNIA DEPARTMENT OF TRANSPORTATION

R. Manzanarez
PROJECT ENGINEER

BRIDGE NO. 34-0006L/R
KILOMETER POST 13.2/13.9

ORIGINAL SCALE IN MILLIMETERS FOR REDUCED PLANS 0 10 20 30 40 50 60 70 80 90 100

CU 04
EA 0120F1

DISREGARD PRINTS BEARING EARLIER REVISION DATES

REVISION DATES (PRELIMINARY STAGE ONLY): 05/15/99 08/02/99 05/31/01 04/08/02 07/09/02 12/19/02

SHEET 34R1 OF

FILE => L:\BB\04-012001\SAS\Contract Plans and CCO\CCO\CCO#23\aepir03.dgn

100 % PS&E

USERNAME => vignatovs DATE PLOTTED => 10 MAY 2007 TIME PLOTTED => 08:59:54