DIST.	COUNTY	ROUTE	KILOMETER POST TOTAL PROJECT	SHEET NO.	TOTAL SHEETS
04	SF	80	13.2/13.9	463R1	1204

Caltrans Metric

REGISTERED ENGINEER - CIVIL

12-6-04
PLANS APPROVAL DATE

REGISTERED PROFESSIONAL ENGINEER John Sun No. C 54648 Exp. 12/31/05 CIVIL STATE OF CALIFORNIA

The State of California or its officers or agents shall not be responsible for the accuracy or completeness of electronic copies of this plan sheet.

T.Y. LIN / MOFFATT & NICHOL
825 BATTERY STREET
SAN FRANCISCO, CA 94111

Caltrans now has a web site! To get to the web site, go to: http://www.dot.ca.gov

REGISTERED PROFESSIONAL ENGINEER James P. Duxbury No. C 64677 Exp. 06/30/07 CIVIL STATE OF CALIFORNIA

FOR REVISIONS ONLY

MARK	DATE	DESCRIPTIONS	BY	CH'D	CCO#
1	07/21/06	W2 CAP BEAM ISD	JD	NV	23

REVISIONS

CONTRACT CHANGE ORDER NO. ____
SHEET ____ OF ____

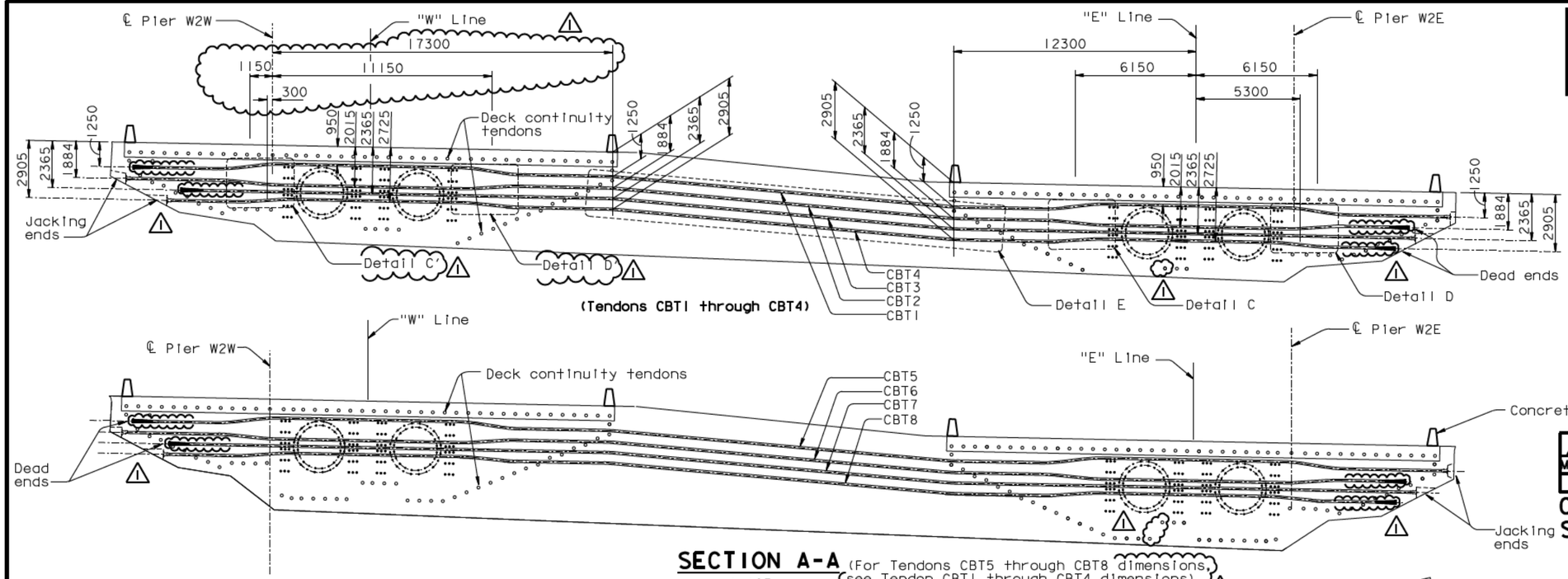

SECTION A-A (For Tendons CBT5 through CBT8 dimensions, see Tendon CBT1 through CBT4 dimensions)
1:125

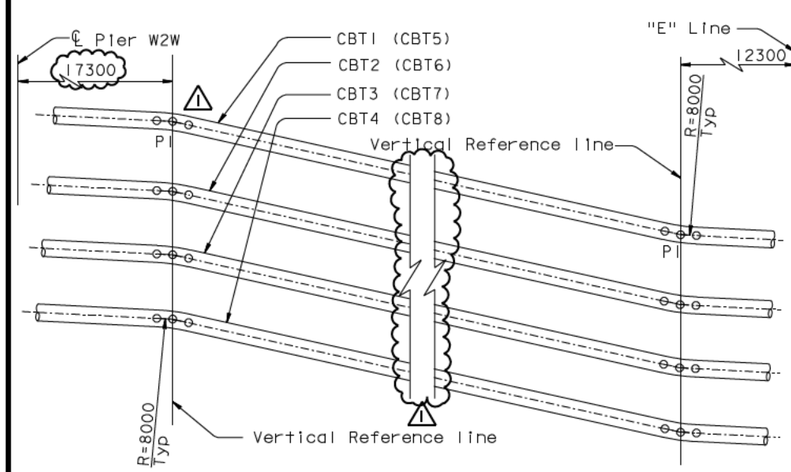

DETAIL E
NTS

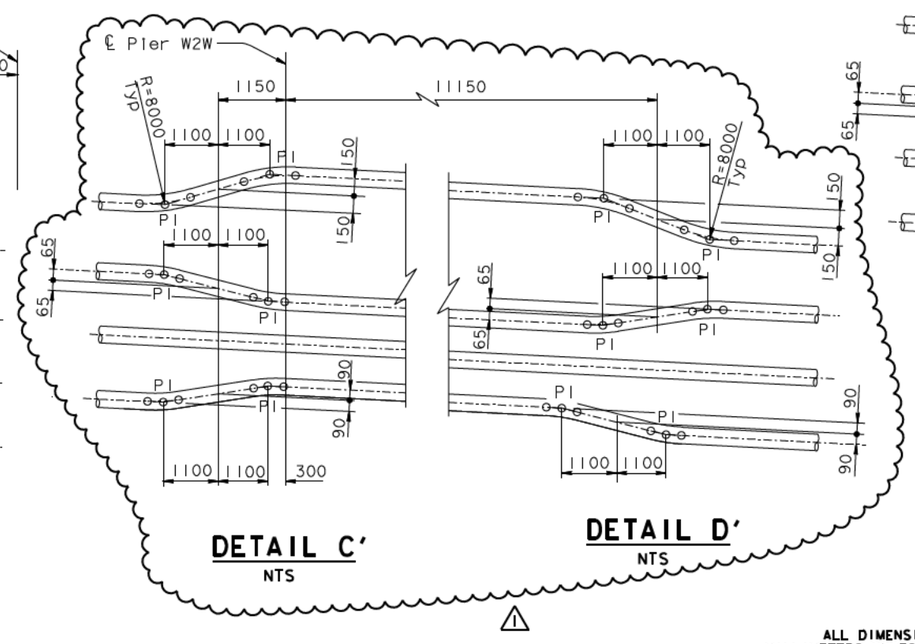

DETAIL C'
NTS

DETAIL D'
NTS

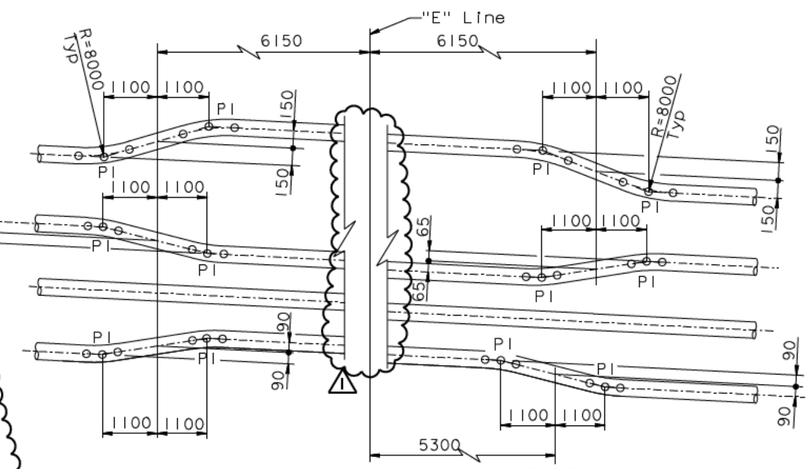

DETAIL C
NTS

DETAIL D
NTS

NOTES:

1. For additional details, see "W2 Cap Beam Post-Tensioning Details No.1" sheet.
2. For PT blockout details, see "W2 Cap Beam Blockout Details" sheets.
3. For deck continuity tendon details, see "W2 Cap Beam Post-Tensioning Details No.5" through "W2 Cap Beam Post-Tensioning Details No.12" sheets.

ALL DIMENSIONS ARE IN MILLIMETERS UNLESS OTHERWISE SHOWN

100 % PS&E

USERNAME => vignatovsk DATE PLOTTED => 10 MAY 2007 TIME PLOTTED => 09:20:31

R. Valizadeh/V.Toan/Y.L./W.L./F.C.
DESIGN OVERSIGHT
Roger Valizadeh / Vong Toan / Y. Lin
SIGN OFF DATE 07/21/06

	BY	CHECKED
DESIGN	J. Sun	M. Chen
DETAILS	J. Duxbury	M. Chen
QUANTITIES	S. Shi	D. Harrison

PREPARED FOR THE STATE OF CALIFORNIA DEPARTMENT OF TRANSPORTATION

R. Manzanarez
PROJECT ENGINEER

BRIDGE NO. 34-0006L/R
KILOMETER POST 13.2/13.9

SAN FRANCISCO OAKLAND BAY BRIDGE
EAST SPAN SEISMIC SAFETY PROJECT
SELF-ANCHORED SUSPENSION BRIDGE
(SUPERSTRUCTURE & TOWER)

W2 CAP BEAM POST-TENSIONING DETAILS NO.2

Rev. Date: 5-18-98

ORIGINAL SCALE IN MILLIMETERS FOR REDUCED PLANS 0 10 20 30 40 50 60 70 80 90 100

CU 04
EA 0120F1

DISREGARD PRINTS BEARING EARLIER REVISION DATES

REVISION DATES (PRELIMINARY STAGE ONLY) 08/02/99 05/31/01 04/08/02 07/01/02 12/19/02

SHEET 046R1 OF

FILE -> I:\bb\04-0120I\sas\contract plans and cco\cco\cco#23\aecpt02.dgn