DIST.	COUNTY	ROUTE	KILOMETER POST TOTAL PROJECT	SHEET NO.	TOTAL SHEETS
04	SF	80	13.2/13.9	514R1	1204

REGISTERED ENGINEER - CIVIL

12-6-04

PLANS APPROVAL DATE

The State of California or its officers or agents shall not be responsible for the accuracy or completeness of electronic copies of this plan sheet.

REGISTERED PROFESSIONAL ENGINEER Alex E. Sanjines No. C 051153 Exp. 9/30/07 CIVIL STATE OF CALIFORNIA

T.Y. LIN / MOFFATT & NICHOL
825 BATTERY STREET
SAN FRANCISCO, CA 94111

Caltrans now has a web site! To get to the web site, go to: http://www.dot.ca.gov

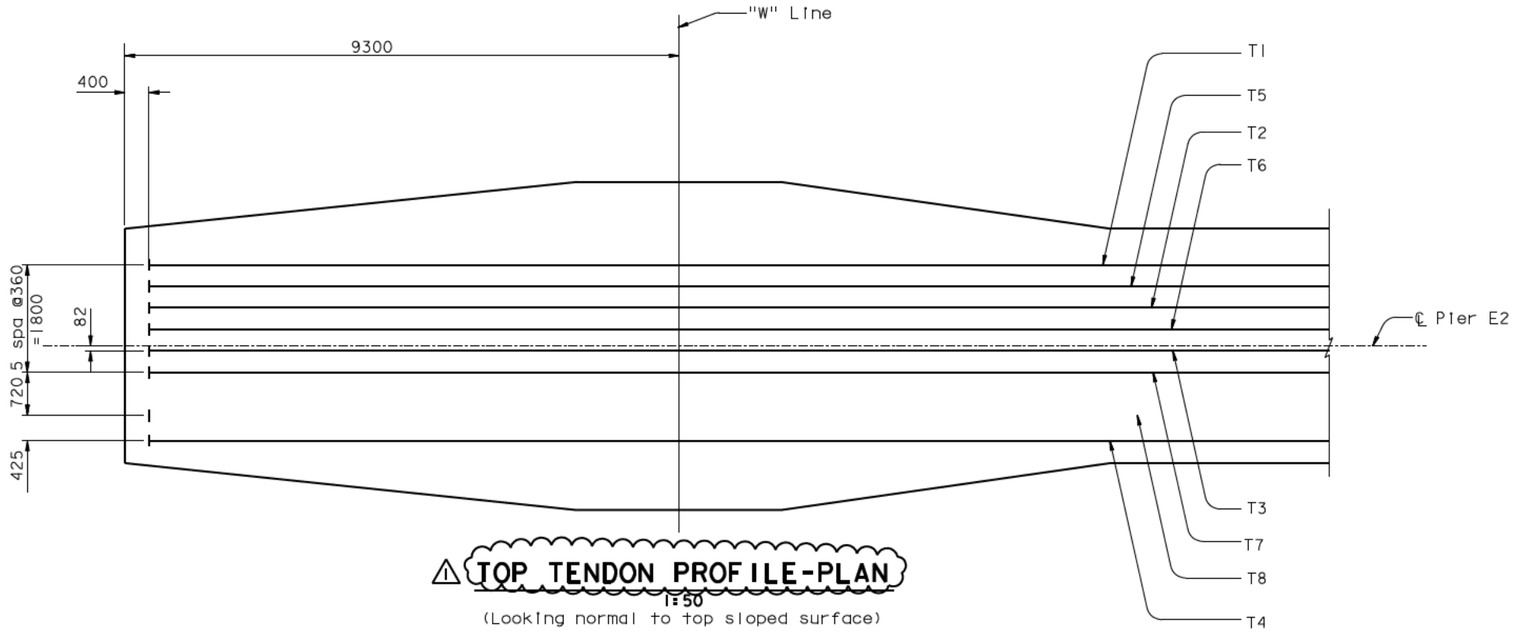

TOP TENDON PROFILE-PLAN
1:50
(Looking normal to top sloped surface)

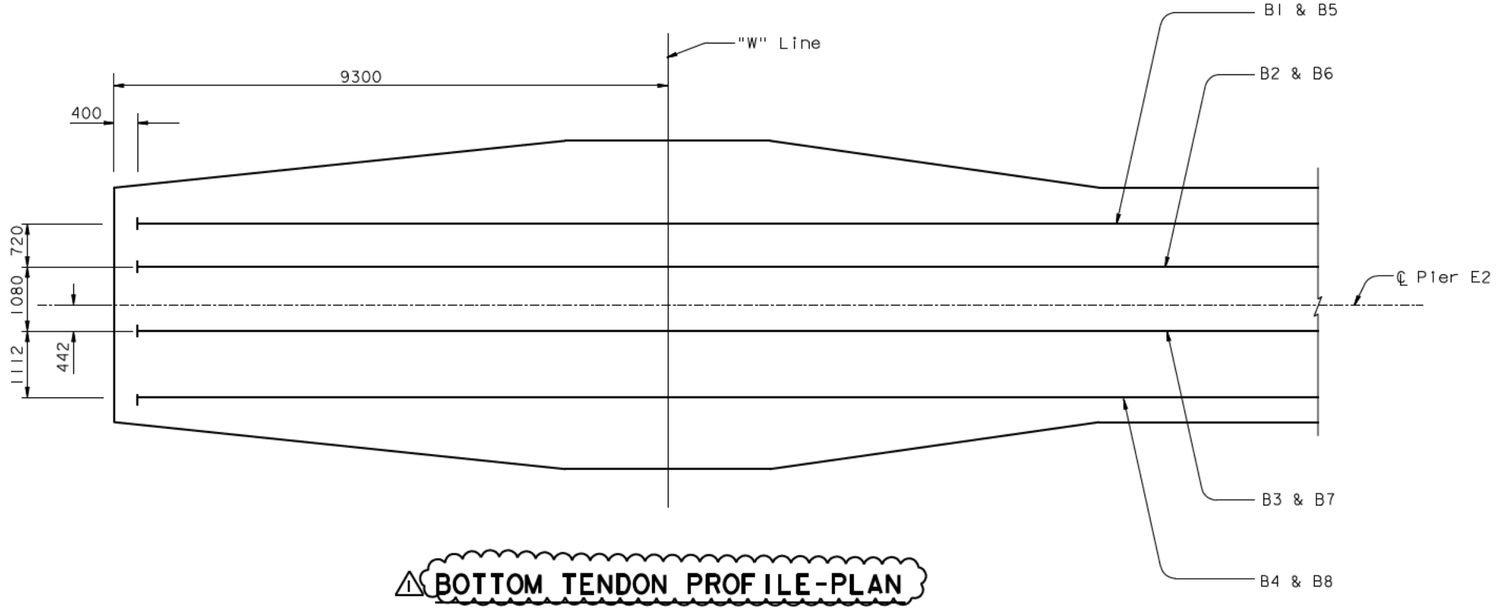

BOTTOM TENDON PROFILE-PLAN
1:50
(Looking normal to top sloped surface)

MARK	DATE	DESCRIPTIONS	BY	CH'D	CCO#
1	07/21/06	E2 CAP BEAM ISD	AS	NV	23

REVISIONS

CONTRACT CHANGE ORDER NO. ____
SHEET ____ OF ____

NOTES:

1. "W" Line shown, "E" Line similar.
2. For tendon anchorage block-out details, see "Pier E2 Details No.8" sheet.
3. For concrete crossbeam reinforcement, see "Pier E2 Details No.3", "Pier E2 Details No.4", and "Pier E2 Details No.7" sheets. 1
4. For stressing force, use two end stressing and initial jacking stress = 0.75 f_{pu} = 0.75 x 1860 = 1390 MPa.
5. For additional prestressing notes, see Prestressing Notes" sheet.
6. The post-tensioning and grouting sequence shall prevent ducts from crushing.
7. The outer diameter of the PT duct shall not be greater than 180 mm. 1

ALL DIMENSIONS ARE IN MILLIMETERS UNLESS OTHERWISE SHOWN

SAN FRANCISCO OAKLAND BAY BRIDGE
EAST SPAN SEISMIC SAFETY PROJECT
SELF-ANCHORED SUSPENSION BRIDGE
(SUPERSTRUCTURE & TOWER)

PIER E2 DETAILS NO.5

R. Valizadeh/V. Toan/Y.L./W.L./F.C.
DESIGN OVERSIGHT
SIGN OFF DATE 07/21/06

	BY	CHECKED
DESIGN	A. Sanjines	J. Chan
DETAILS	R. Xu	J. Chan
QUANTITIES	C. Bernardo	B. Mason

PREPARED FOR THE STATE OF CALIFORNIA DEPARTMENT OF TRANSPORTATION

R. Manzanarez
PROJECT ENGINEER

BRIDGE NO. 34-0006L/R
KILOMETER POST 13.2/13.9

Rev. Date: 5-18-98

ORIGINAL SCALE IN MILLIMETERS FOR REDUCED PLANS 0 10 20 30 40 50 60 70 80 90 100

CU 04
EA 0120F1

DISREGARD PRINTS BEARING EARLIER REVISION DATES

REVISION DATES (PRELIMINARY STAGE ONLY) 08/02/99 05/31/01 04/08/02 07/01/02 12/19/02

SHEET 97R1 OF

FILE -> I:\bb\04-012001\sas\contract plans and cco\cco\cco#23\aepir05e.dgn

100 % PS&E

USERNAME => vignatovs DATE PLOTTED => 10 MAY 2007 TIME PLOTTED => 11:20:20