DIST.	COUNTY	ROUTE	KILOMETER POST TOTAL PROJECT	SHEET NO.	TOTAL SHEETS
04	SF	80	13.2/13.9	497S24	1204

REGISTERED ENGINEER - CIVIL

07-21-06

PLANS APPROVAL DATE

REGISTERED PROFESSIONAL ENGINEER James P.Duxbury No. C 64677 Exp. 06/30/07 CIVIL STATE OF CALIFORNIA

The State of California or its officers or agents shall not be responsible for the accuracy or completeness of electronic copies of this plan sheet.

T.Y. LIN / MOFFATT & NICHOL
825 BATTERY STREET
SAN FRANCISCO, CA 94111

To get to the web site, go to: http://www.dot.ca.gov

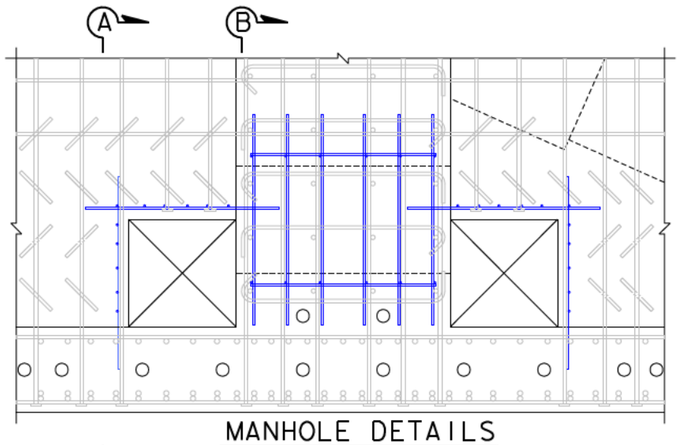

MANHOLE DETAILS

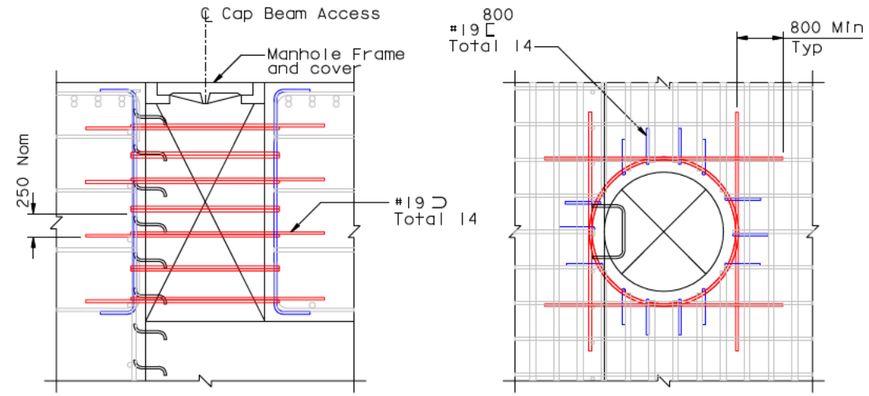

MANHOLE DETAILS

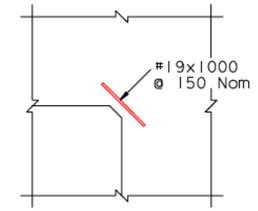

CORNER BAR DETAIL
(Upper cap beam void region)

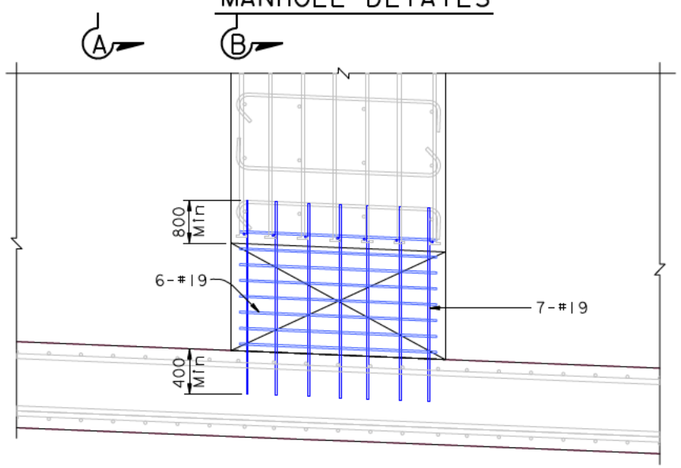

VIEW A-A

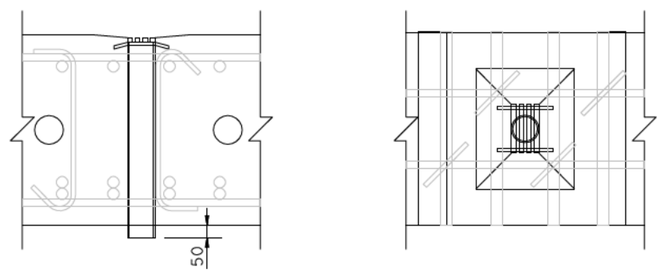

DRAIN DETAIL

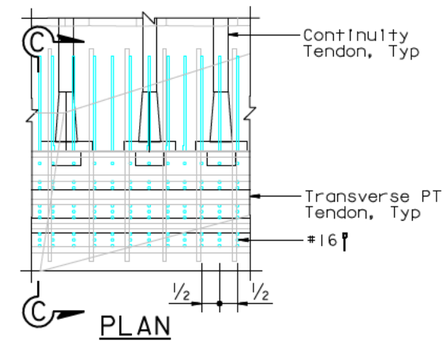

PLAN

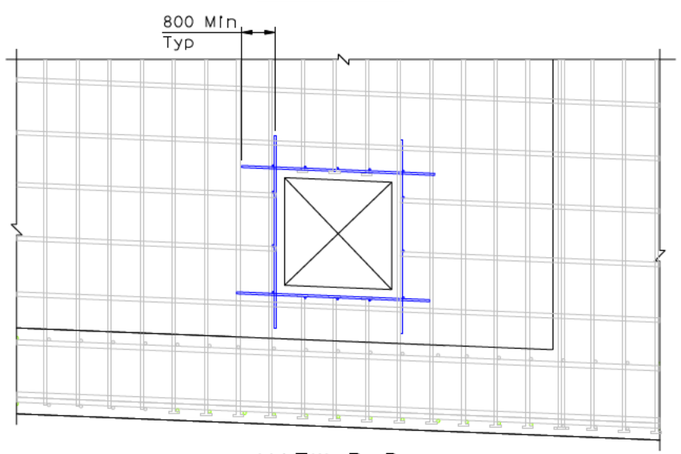

VIEW B-B

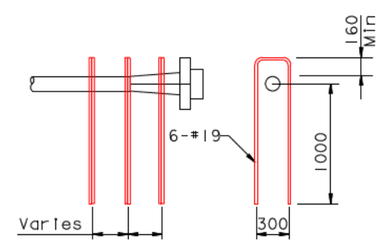

PT HAIR PIN DETAIL

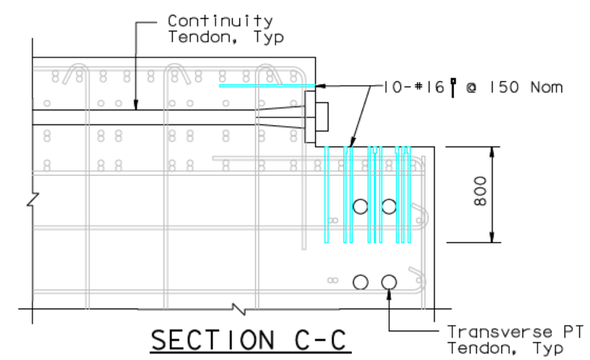

SECTION C-C

JOINT REINFORCEMENT DETAILS

NOTES:

1. Manhole frame and cover shall be cast iron. Complete assembly shall be galvanized after fabrication. Cover shall be supplied with bolt down or locking devices.

MARK	DATE	DESCRIPTIONS	BY	CH'D	CCO#
0	07/21/06	W2 CAP BEAM ISD	JD	AS	23

REVISIONS

CONTRACT CHANGE ORDER NO. _____
SHEET ____ OF ____

100 % PS&E

TIME PLOTTED => 10:32:02
DATE PLOTTED => 10 MAY 2007
USERNAME => vlignatovs

ALL DIMENSIONS ARE IN MILLIMETERS UNLESS OTHERWISE SHOWN

R. Vallizadeh/V. Toan/Y.L./W.L./F.C.
DESIGN OVERSIGHT
Ryan Vallizadeh / Vong Toan / Y. Liu
SIGN OFF DATE 07/21/06

Rev. Date: 5-18-98

DESIGN	BY J. Duxbury	CHECKED A. Sanjines
DETAILS	BY J. Duxbury	CHECKED A. Sanjines
QUANTITIES	BY N. Vo	CHECKED J. Duxbury

PREPARED FOR THE STATE OF CALIFORNIA DEPARTMENT OF TRANSPORTATION

R. Manzanarez
PROJECT ENGINEER

BRIDGE NO. 34-0006L/R
KILOMETER POST 13.2/13.9

SAN FRANCISCO OAKLAND BAY BRIDGE
EAST SPAN SEISMIC SAFETY PROJECT
SELF-ANCHORED SUSPENSION BRIDGE
(SUPERSTRUCTURE & TOWER)

W2 CAP BEAM REINFORCEMENT DETAILS NO. 48

ORIGINAL SCALE IN MILLIMETERS FOR REDUCED PLANS 0 10 20 30 40 50 60 70 80 90 100

CU 04
EA 0120F1

DISREGARD PRINTS BEARING EARLIER REVISION DATES 07/21/06

REVISION DATES (PRELIMINARY STAGE ONLY)

SHEET 080S24 OF

FILE -> I:\bb\04-012001\sas\contract plans and cco\cco\cco#23\aecap47r-s.dgn