DIST.	COUNTY	ROUTE	KILOMETER POST TOTAL PROJECT	SHEET NO.	TOTAL SHEETS
04	SF	80	13.2/13.9	517R1	1204

Caltrans Metric

REGISTERED ENGINEER - CIVIL

12-6-04
PLANS APPROVAL DATE

REGISTERED PROFESSIONAL ENGINEER Alex E. Sanjines No. C 051153 Exp. 9/30/07 CIVIL STATE OF CALIFORNIA

The State of California or its officers or agents shall not be responsible for the accuracy or completeness of electronic copies of this plan sheet.

T.Y. LIN / MOFFATT & NICHOL
825 BATTERY STREET
SAN FRANCISCO, CA 94111

Caltrans now has a web site! To get to the web site, go to: http://www.dot.ca.gov

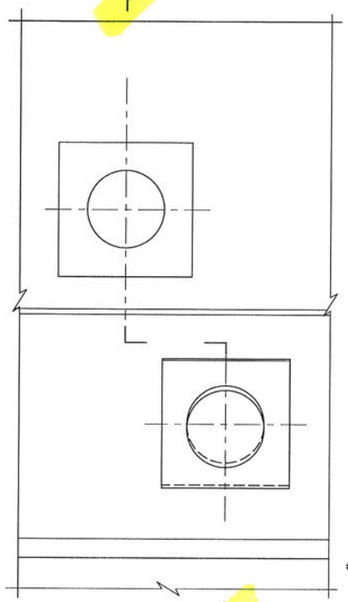

DETAIL A
NTS

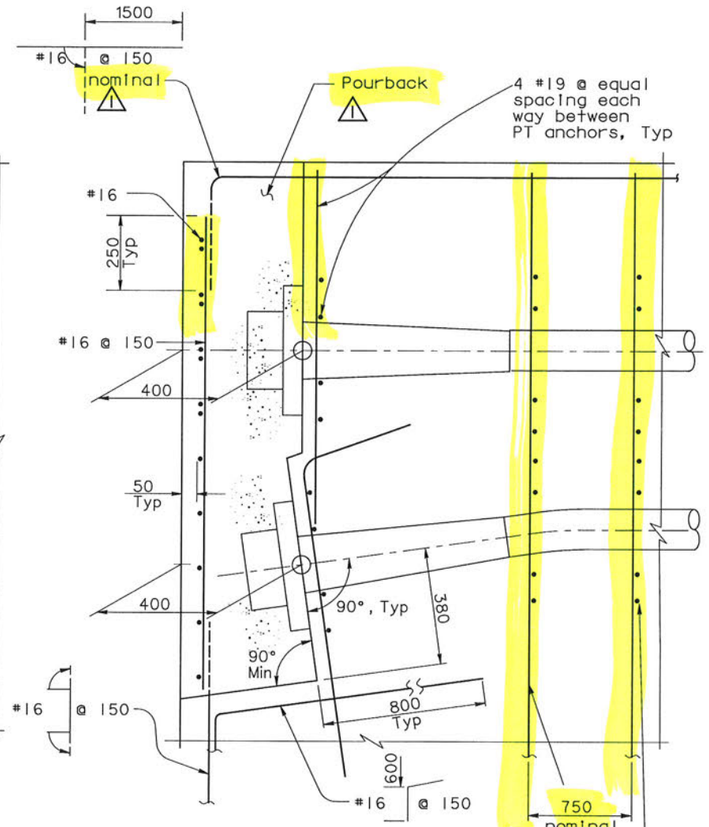

SECTION A-A
NTS
(Not all reinforcement shown for clarity)

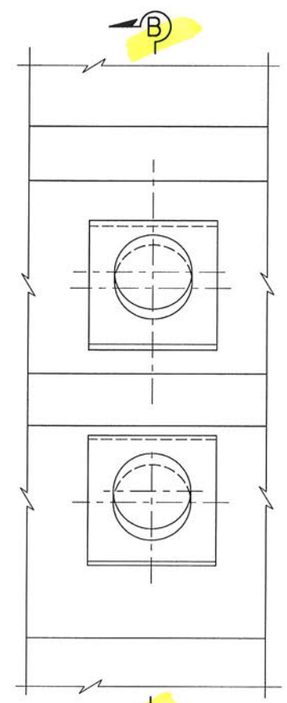

DETAIL B
NTS

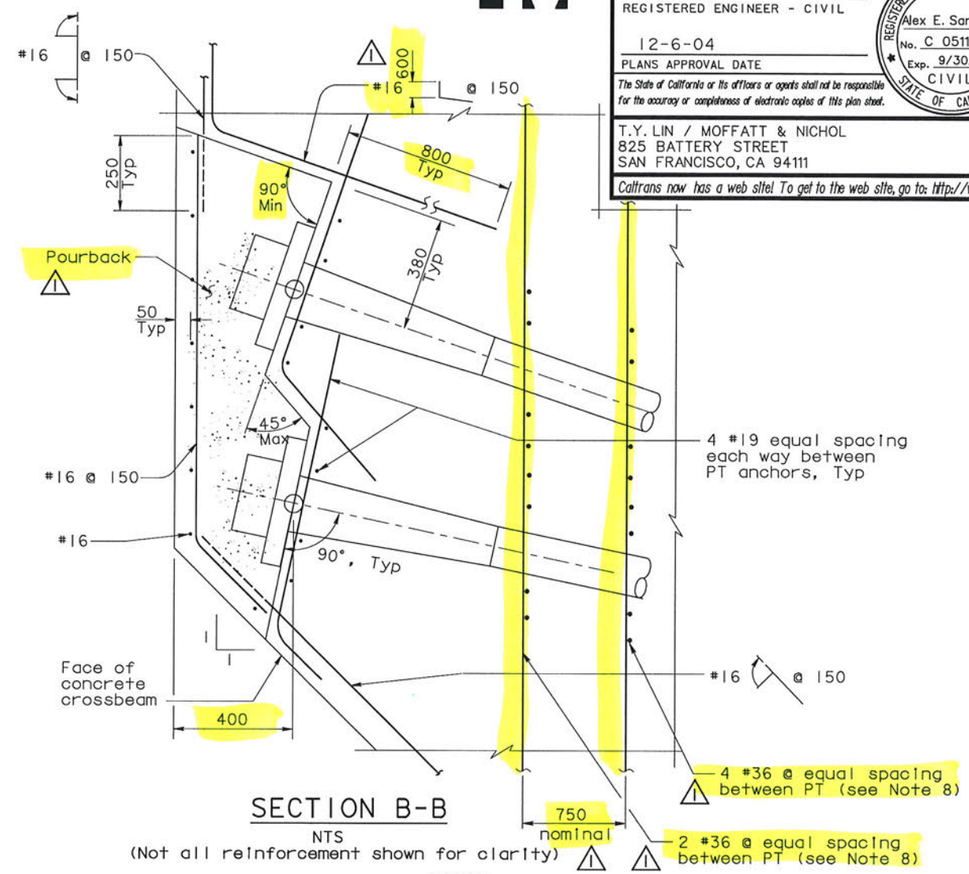

SECTION B-B
NTS
(Not all reinforcement shown for clarity)

NOTES:

1. For PT tendon plans and crossbeam elevation, see "Pier E2 Details No.5" sheet.
2. For pier E2 column elevation, see "Pier E2 Details No.2" sheet.
3. All PT tendons are 55-15 Dia.
4. Local confining reinforcement (not shown for clarity) per tendon anchor shall be provided by PT hardware supplier.
5. For additional prestressing details, see "Prestressing Notes" sheet.
6. Block-out geometry reflects standard post-tensioning industry requirements. Actual post-tensioning system dimensions may vary; final block-out geometry shall be reviewed and approved by the Engineer.
7. Post-tensioning anchorage details reflect industry standard geometry. Actual dimensions may vary depending on supplier. It shall be Contractor's responsibility to accomodate the actual system to plan geometry.
8. Contractor may vary spacing and size to clear other reinforcement, such that the equivalent steel is provided.

MARK	DATE	DESCRIPTIONS	BY	CH'D
1	07/21/06	E2 CAP BEAM ISD	AS	NV

REVISIONS

CONTRACT CHANGE ORDER NO. _____
SHEET ____ OF ____

ALL DIMENSIONS ARE IN MILLIMETERS UNLESS OTHERWISE SHOWN

SAN FRANCISCO OAKLAND BAY BRIDGE
EAST SPAN SEISMIC SAFETY PROJECT
SELF-ANCHORED SUSPENSION BRIDGE
(SUPERSTRUCTURE & TOWER)

PIER E2 DETAILS NO. 8

R. Vallizadeh/V. Toan/Y. L./W. L./F. C.
DESIGN OVERSIGHT
SIGN OFF DATE 07/21/06

Rev. Date: 5-18-98

	BY	CHECKED
DESIGN	A. Sanjines	J. Chan
DETAILS	R. Xu	J. Chan
QUANTITIES	C. Bernardo	B. Mason

PREPARED FOR THE STATE OF CALIFORNIA DEPARTMENT OF TRANSPORTATION

R. Manzanarez
PROJECT ENGINEER

BRIDGE NO. 34-0006L/R
KILOMETER POST 13.2/13.9

ORIGINAL SCALE IN MILLIMETERS FOR REDUCED PLANS 0 10 20 30 40 50 60 70 80 90 100

CU 04
EA 0120F1

DISREGARD PRINTS BEARING EARLIER REVISION DATES

REVISION DATES (PRELIMINARY STAGE ONLY) 05/31/01 03/08/02 03/08/02 12/19/02

SHEET 100R1 OF

FILE => p:\bb\04-012001\sas readv august 2005\cco#23\aepir06e.dgn

100% PS&E

USERNAME => vignatovs DATE PLOTTED => 14 JUL 2006 TIME PLOTTED => 14:50:39