NOTES:

1. For Sections F-F and G-G, see "Pier E2 Details No.4" sheet. For Section H-H, see "Pier E2 Details No.7" sheet.
2. No splices permitted in region (1). Splicing within region (2) shall be staggered and not more than 50% at one section.
3. Cross beam reinforcement similar about ℄ Bridge.
4. Alternate 90° and 135° seismic hook horizontally and vertically. Hook shall engage horizontal bars.
5. Column hoops shall follow the 2% slope inside the capbeam.
6. PT, Bearing and Shear key hardware not shown for clarity.
7. For additional notes, see "Pier E2 Details No.4" sheet.
8. At the locations of bearings and midspan shear keys, Contractor may replace ties with equivalent headed bars.
9. Reinforcement placement support bars required (not shown), Typical.
10. Longitudinal crossbeam, reinforcement shall be placed so as to avoid pier reinforcement & anchor bolts.

DIST.	COUNTY	ROUTE	KILOMETER POST TOTAL PROJECT	SHEET NO.	TOTAL SHEETS
04	SF	80	13.2/13.9	512R1	1204

REGISTERED ENGINEER - CIVIL

12-6-04
PLANS APPROVAL DATE

REGISTERED PROFESSIONAL ENGINEER Alex E. Sanjines No. C 051153 Exp. 9/30/07 CIVIL STATE OF CALIFORNIA

The State of California or its officers or agents shall not be responsible for the accuracy or completeness of electronic copies of this plan sheet.

T.Y. LIN / MOFFATT & NICHOL
825 BATTERY STREET
SAN FRANCISCO, CA 94111

Caltrans now has a web site! To get to the web site, go to: http://www.dot.ca.gov

Caltrans Metric

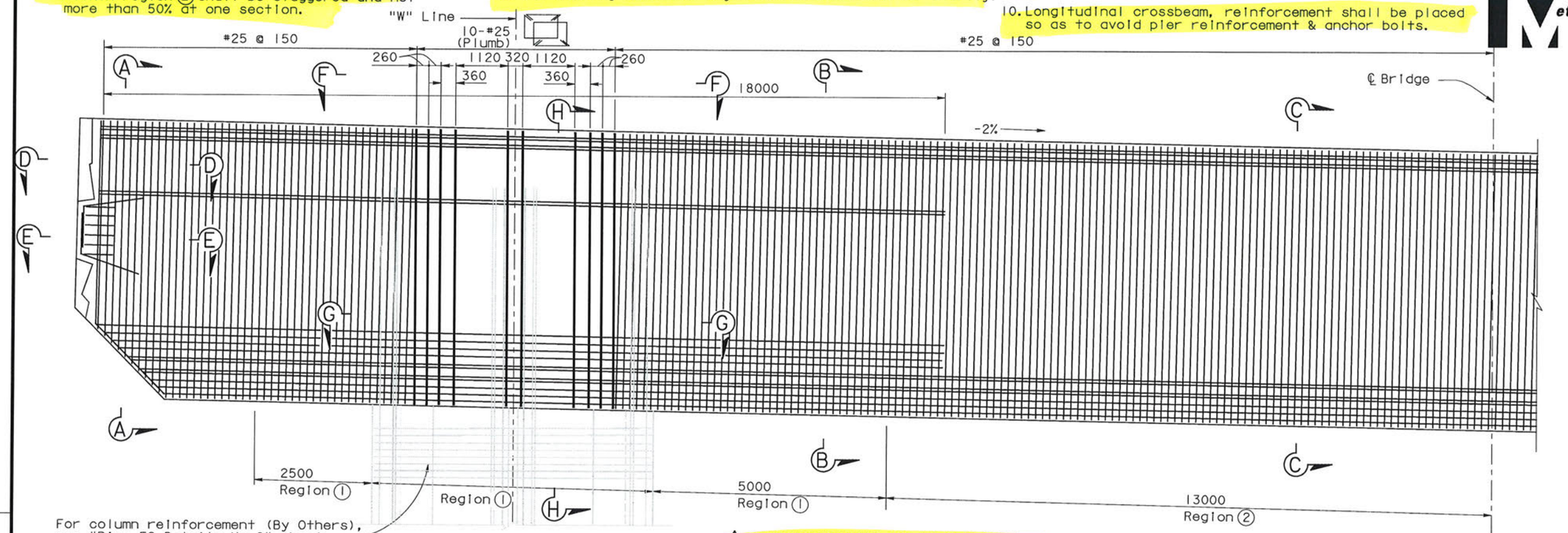

CROSSBEAM ELEVATION
1:50

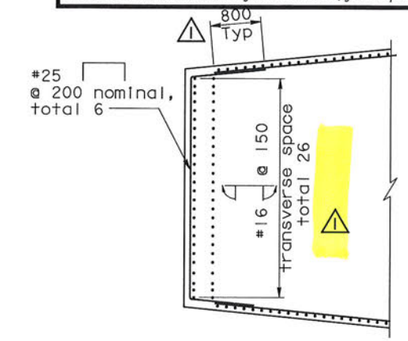

SECTION E-E
1:50

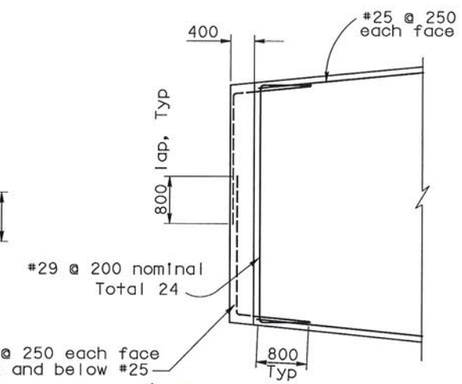

SECTION D-D (At block-out)
1:50
(Not all reinforcement shown for clarity)

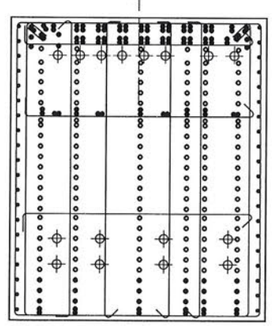

SECTION A-A
1:50

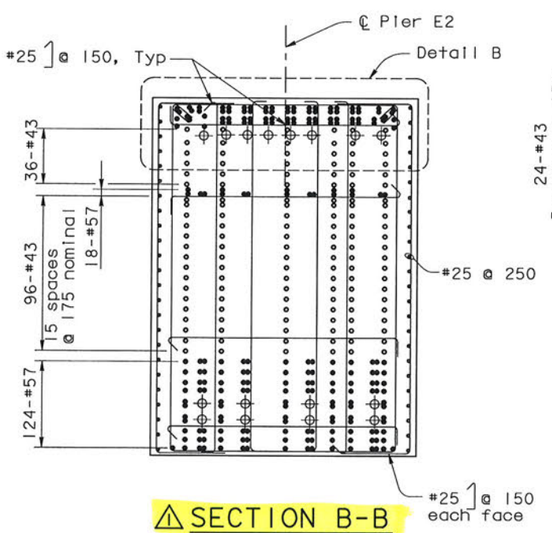

SECTION B-B
1:50

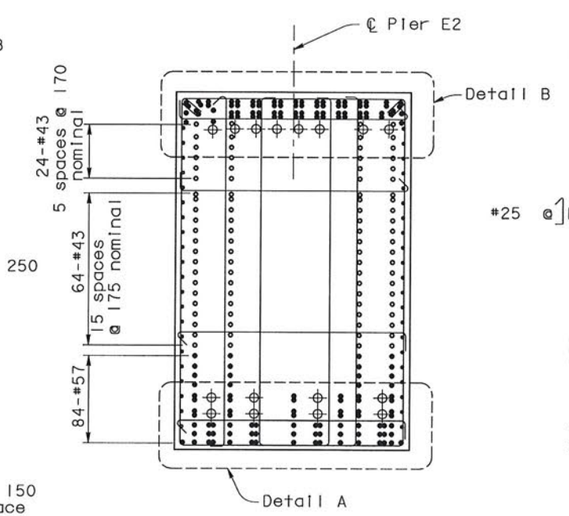

SECTION C-C
1:50

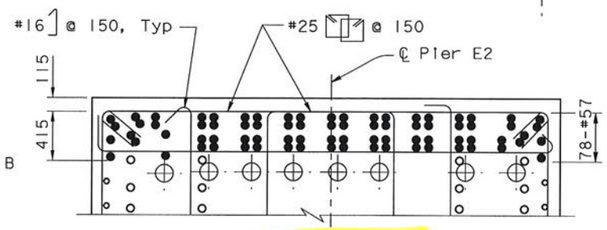

DETAIL B
1:25

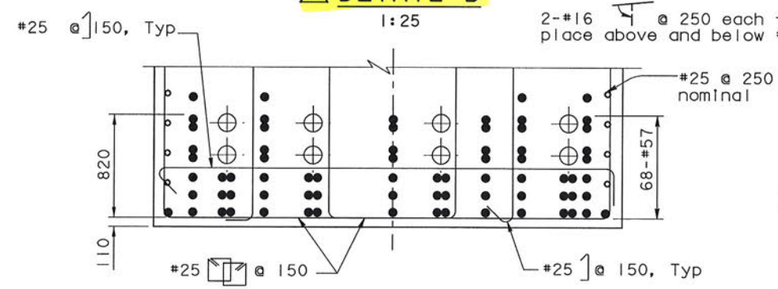

DETAIL A
1:25

ALL DIMENSIONS ARE IN MILLIMETERS UNLESS OTHERWISE SHOWN

LEGEND:

- ● #57 Bar
- ○ #43 Bar
- ∘ #25 Bar

100 % PS&E

MARK	DATE	DESCRIPTIONS	BY	CH'D
1	07/21/06	E2 CAP BEAM ISD	AS	NV

REVISIONS

CONTRACT CHANGE ORDER NO. ____
SHEET ____ OF ____

R. Vallizadeh/V. Toan/Y.L./W.L./F.C.
DESIGN OVERSIGHT
SIGN OFF DATE 07/21/06

Rev. Date: 5-18-98

	BY	CHECKED
DESIGN	A. Sanjines	J. Chan
DETAILS	R. Xu	J. Chan
QUANTITIES	C. Bernardo	B. Mason

ORIGINAL SCALE IN MILLIMETERS FOR REDUCED PLANS 0 10 20 30 40 50 60 70 80 90 100

PREPARED FOR THE STATE OF CALIFORNIA DEPARTMENT OF TRANSPORTATION

R. Manzanarez
PROJECT ENGINEER

CU 04
EA 0120F1

BRIDGE NO. 34-0006L/R
KILOMETER POST 13.2/13.9

DISREGARD PRINTS BEARING EARLIER REVISION DATES

REVISION DATES (PRELIMINARY STAGE ONLY) 08/02/99 05/31/01 04/08/02 07/01/02 12/18/02 05/16/03

SAN FRANCISCO OAKLAND BAY BRIDGE
EAST SPAN SEISMIC SAFETY PROJECT
SELF-ANCHORED SUSPENSION BRIDGE
(SUPERSTRUCTURE & TOWER)

PIER E2 DETAILS NO.3

SHEET 95R1 OF

FILE => p:\bb\04-0120f1\sas ready august 2005\cco#23\aeplr03e-r1.dgn

USERNAME => vignatovs DATE PLOTTED => 14 JUL 2006 TIME PLOTTED => 14:45:22