DIST.	COUNTY	ROUTE	KILOMETER POST TOTAL PROJECT	SHEET NO.	TOTAL SHEETS
04	SF	80	13.2/13.9	432R1	1204

REGISTERED ENGINEER - CIVIL

12-6-04
PLANS APPROVAL DATE

REGISTERED PROFESSIONAL ENGINEER Tien Hung Ho No. C 43990 Exp. 06/30/07 CIVIL STATE OF CALIFORNIA

The State of California or its officers or agents shall not be responsible for the accuracy or completeness of electronic copies of this plan sheet.

T.Y. LIN / MOFFATT & NICHOL
825 BATTERY STREET
SAN FRANCISCO, CA 94111

Caltrans now has a web site! To get to the web site, go to: http://www.dot.ca.gov

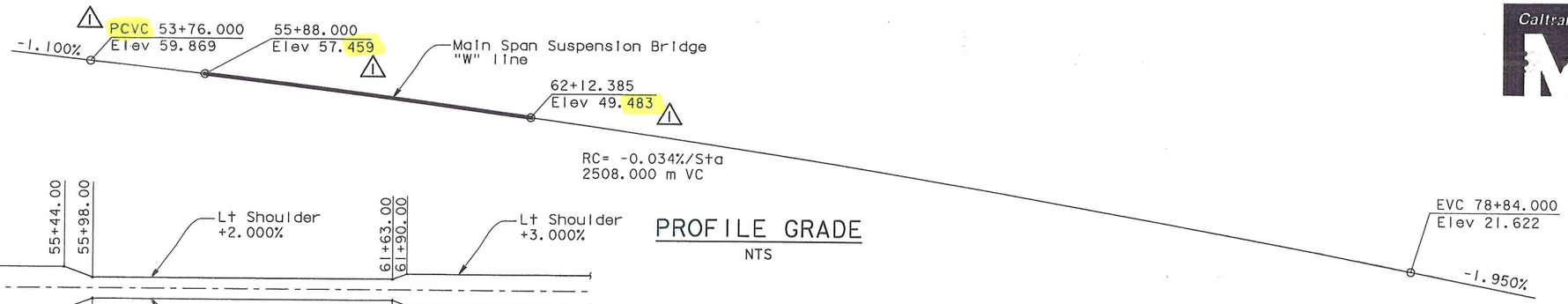

PROFILE GRADE
NTS

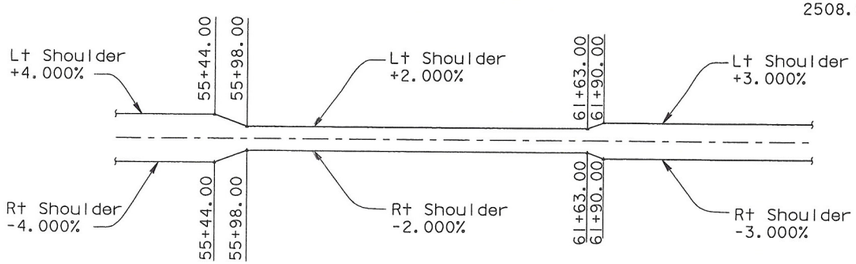

SUPERELEVATION DIAGRAM
NTS

MARK	DATE	DESCRIPTIONS	BY	CH'D
1	07/21/06	W2 CAP BEAM ISD	TH	NV

REVISIONS

CONTRACT CHANGE ORDER NO. _____
SHEET ____ OF ____

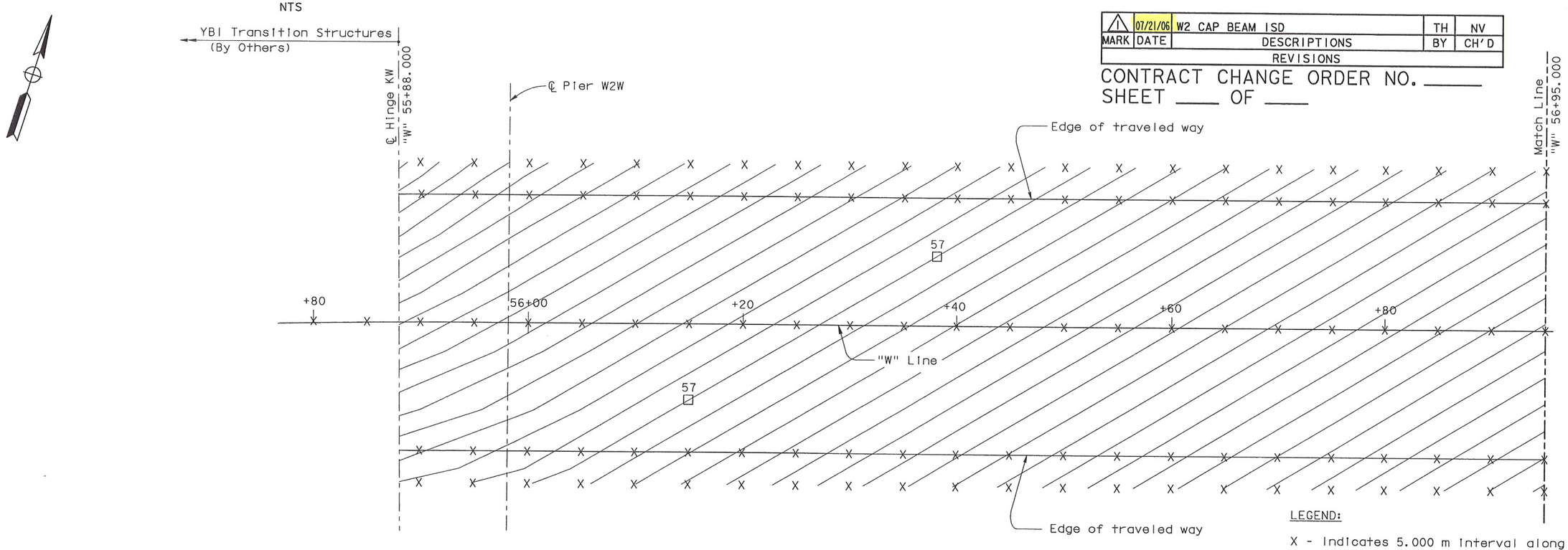

PARTIAL PLAN
1:200

LEGEND:

X - Indicates 5.000 m interval along station line
□ - Indicates even meter contour

NOTES:

1. Contour interval at 0.050 meter.
2. Contours are for top roadway surface.
3. Contours do not include camber.

ALL DIMENSIONS ARE IN METERS UNLESS OTHERWISE SHOWN

R. Valizadeh/V. Toan/Y.L./W.L./F.C.
DESIGN OVERSIGHT
SIGN OFF DATE 07/21/06

Rev. Date: 5-18-98

	BY	CHECKED
DESIGN	T. Ho	M. Nader
DETAILS	V. Ignatovsky	M. Nader
QUANTITIES	D. Harrison	N. Vo

PREPARED FOR THE STATE OF CALIFORNIA DEPARTMENT OF TRANSPORTATION

R. Manzanarez
PROJECT ENGINEER

BRIDGE NO. 34-0006L/R
KILOMETER POST 13.2/13.9

SAN FRANCISCO OAKLAND BAY BRIDGE
EAST SPAN SEISMIC SAFETY PROJECT
SELF-ANCHORED SUSPENSION BRIDGE
(SUPERSTRUCTURE & TOWER)

DECK CONTOURS NO. 1

ORIGINAL SCALE IN MILLIMETERS FOR REDUCED PLANS 0 10 20 30 40 50 60 70 80 90 100

CU 04
EA 0120F1

DISREGARD PRINTS BEARING EARLIER REVISION DATES → 01/30/99 05/18/99 08/02/99 05/31/01 04/08/02 07/01/02 12/18/02 05/16/03

REVISION DATES (PRELIMINARY STAGE ONLY)

SHEET 015R1 OF

FILE => p:\bb\04-012001\sas ready august 2005\cco#23\abdkc01.dgn

100 % PS&E

USERNAME => vignatovsky DATE PLOTTED => 14 JUL 2006 TIME PLOTTED => 09:29:58

DIST.	COUNTY	ROUTE	KILOMETER POST TOTAL PROJECT	SHEET No.	TOTAL SHEETS
04	SF	80	13.2/13.9	437R1	1204

REGISTERED ENGINEER - CIVIL

12-6-04
PLANS APPROVAL DATE

REGISTERED PROFESSIONAL ENGINEER Tien Hung Ho No. C 43990 Exp. 06/30/07 CIVIL STATE OF CALIFORNIA

The State of California or its officers or agents shall not be responsible for the accuracy or completeness of electronic copies of this plan sheet.

T.Y. LIN / MOFFATT & NICHOL
825 BATTERY STREET
SAN FRANCISCO, CA 94111

Caltrans now has a web site! To get to the web site, go to: http://www.dot.ca.gov

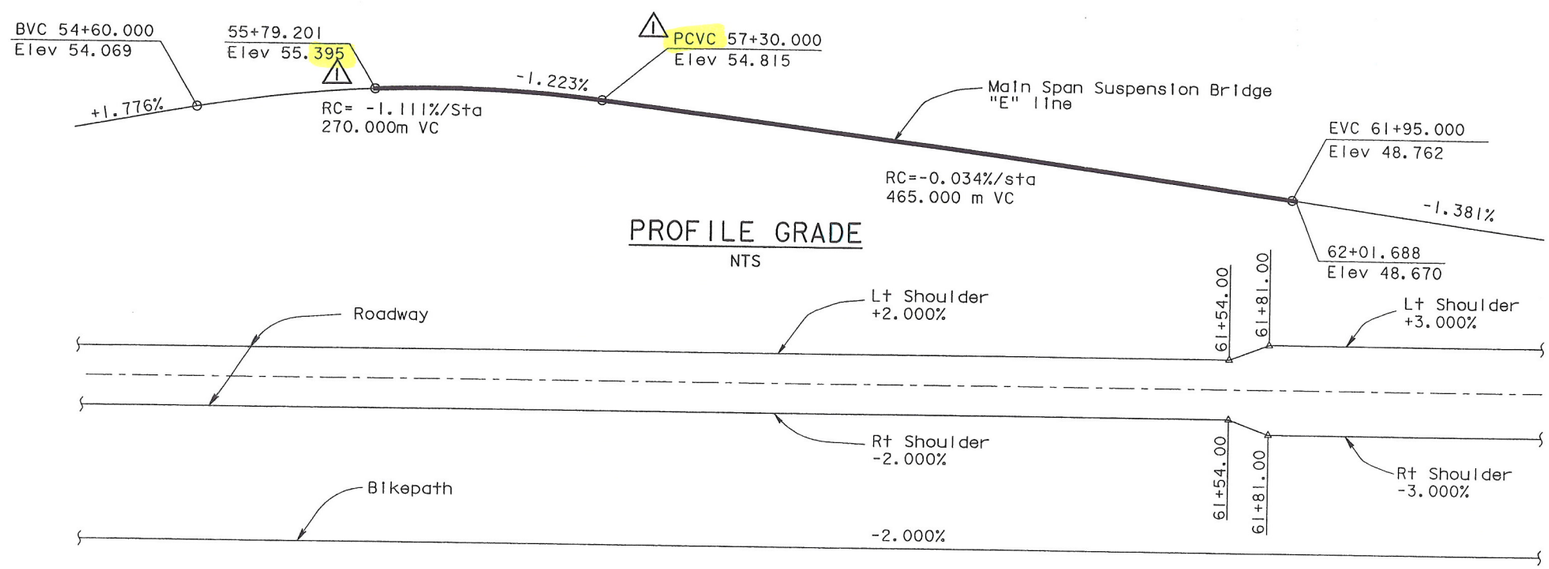

PROFILE GRADE
NTS

SUPERELEVATION DIAGRAM
NTS

LEGEND:

X - Indicates 5.000 m interval along station line
□ - Indicates even meter contour

NOTES:

1. Contour Interval at 0.050 meter.
2. Contours are for top roadway surface.
3. Contours do not include camber.

MARK	DATE	DESCRIPTIONS	BY	CH'D
1	07/21/06	W2 CAP BEAM ISD	TH	NV

REVISIONS

CONTRACT CHANGE ORDER NO. _____
SHEET ____ OF ____

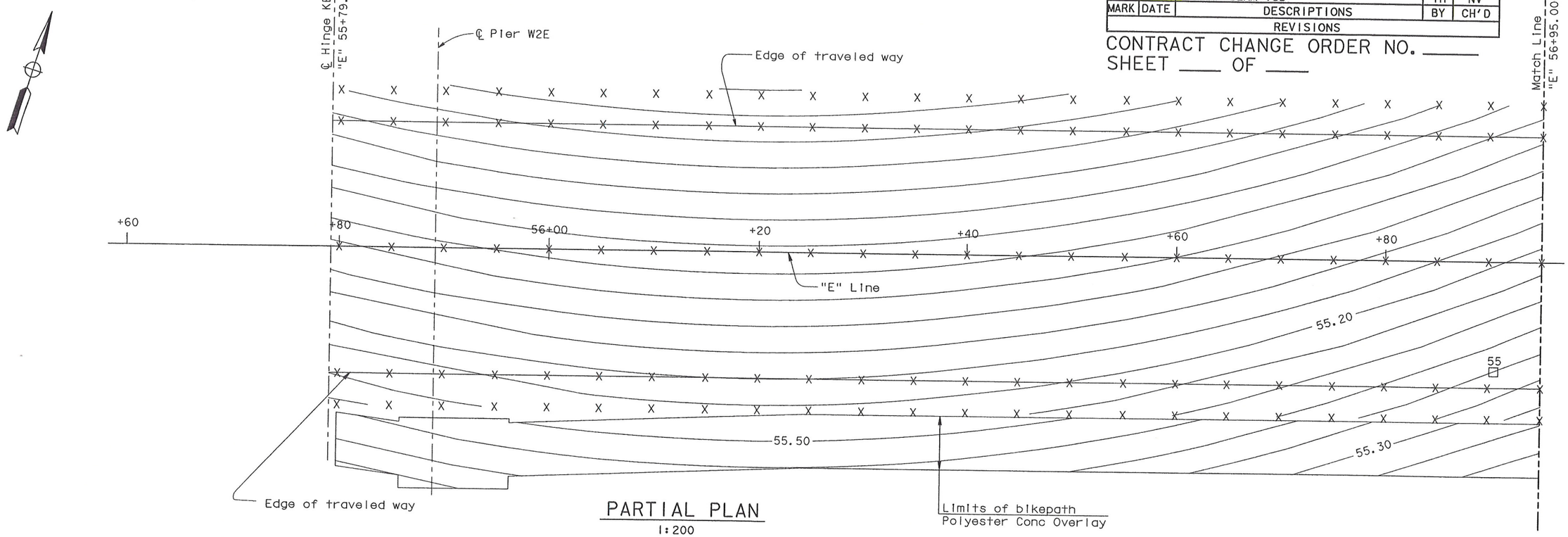

PARTIAL PLAN
1:200

ALL DIMENSIONS ARE IN METERS UNLESS OTHERWISE SHOWN

R. Valizadeh/V. Toan/Y.L./W.L./F.C.
DESIGN OVERSIGHT
SIGN OFF DATE 07/21/06
Rev. Date: 5-18-98

	BY	CHECKED	
DESIGN	T. Ho	M. Nader	
DETAILS	V. Ignatovsky	M. Nader	
QUANTITIES	D. Harrison	N. Vo	

PREPARED FOR THE STATE OF CALIFORNIA DEPARTMENT OF TRANSPORTATION

R. Manzanarez
PROJECT ENGINEER

BRIDGE NO. 34-0006L/R
KILOMETER POST 13.2/13.9

SAN FRANCISCO OAKLAND BAY BRIDGE
EAST SPAN SEISMIC SAFETY PROJECT
SELF-ANCHORED SUSPENSION BRIDGE
(SUPERSTRUCTURE & TOWER)

DECK CONTOURS No. 6

ORIGINAL SCALE IN MILLIMETERS FOR REDUCED PLANS 0 10 20 30 40 50 60 70 80 90 100

CU 04
EA 0120F1

DISREGARD PRINTS BEARING EARLIER REVISION DATES

REVISION DATES (PRELIMINARY STAGE ONLY): 01/13/99 05/12/99 08/06/99 05/31/01 04/08/02 07/01/02 12/19/02

SHEET 020R1 OF

FILE => p:\bb\04-012001\sas readv august 2005\coo#23\abdkc06.dgn

100 % PS&E

USERNAME => vignatovsky DATE PLOTTED => 14 JUL 2006 TIME PLOTTED => 09:30:48

DIST.	COUNTY	ROUTE	KILOMETER POST TOTAL PROJECT	SHEET NO.	TOTAL SHEETS
04	SF	80	13.2/13.9	450R1	1204

Caltrans Metric

REGISTERED ENGINEER - CIVIL

12-6-04
PLANS APPROVAL DATE

REGISTERED PROFESSIONAL ENGINEER John Sun No. C 54648 Exp. 12/31/05 CIVIL STATE OF CALIFORNIA

The State of California or its officers or agents shall not be responsible for the accuracy or completeness of electronic copies of this plan sheet.

T.Y. LIN / MOFFATT & NICHOL
825 BATTERY STREET
SAN FRANCISCO, CA 94111

Caltrans now has a web site! To get to the web site, go to: http://www.dot.ca.gov

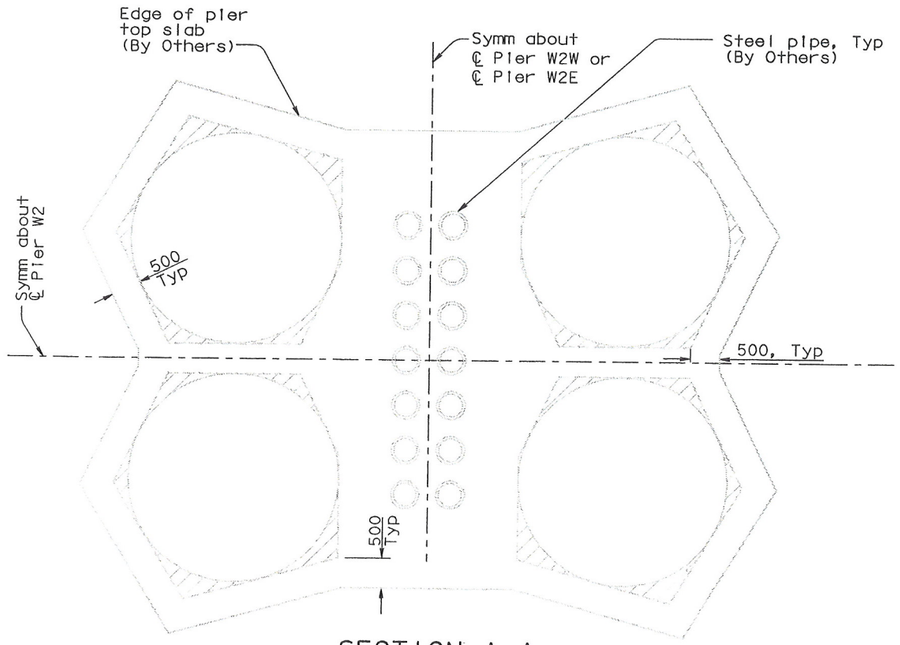

SECTION A-A
1:50

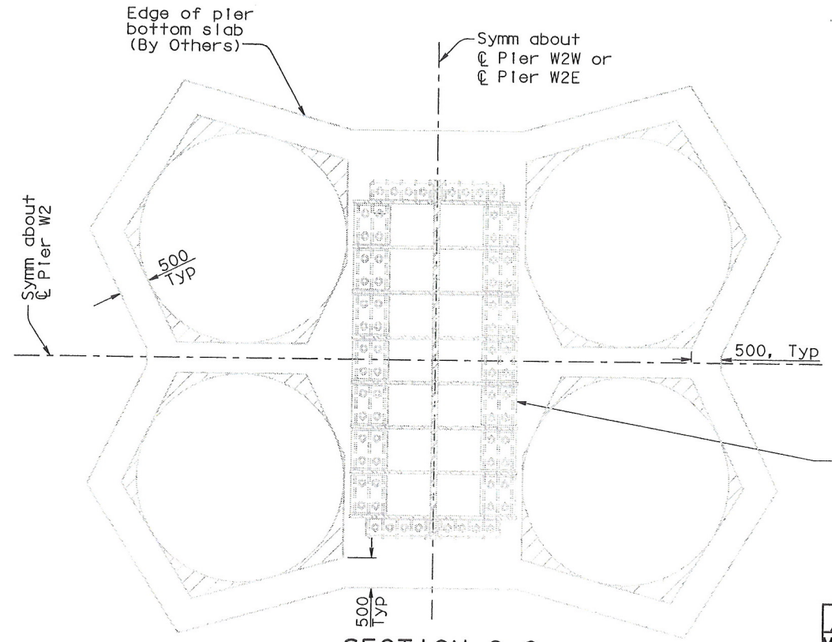

SECTION C-C
1:50

LEGEND:

Indicates 100 recess

REGISTERED PROFESSIONAL ENGINEER James P. Duxbury No. C 64677 Exp. 06/30/07 CIVIL STATE OF CALIFORNIA

FOR REVISIONS ONLY

MARK	DATE	DESCRIPTIONS	BY	CH'D
1	07/21/06	W2 CAP BEAM ISD	JD	NV

REVISIONS

CONTRACT CHANGE ORDER NO. _____
SHEET ____ OF ____

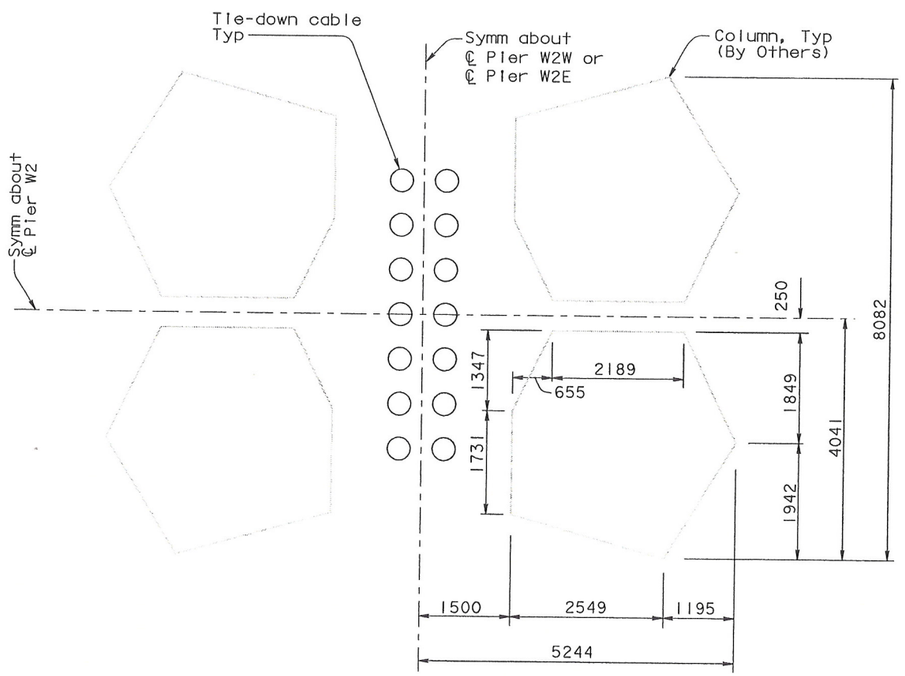

SECTION B-B
1:50

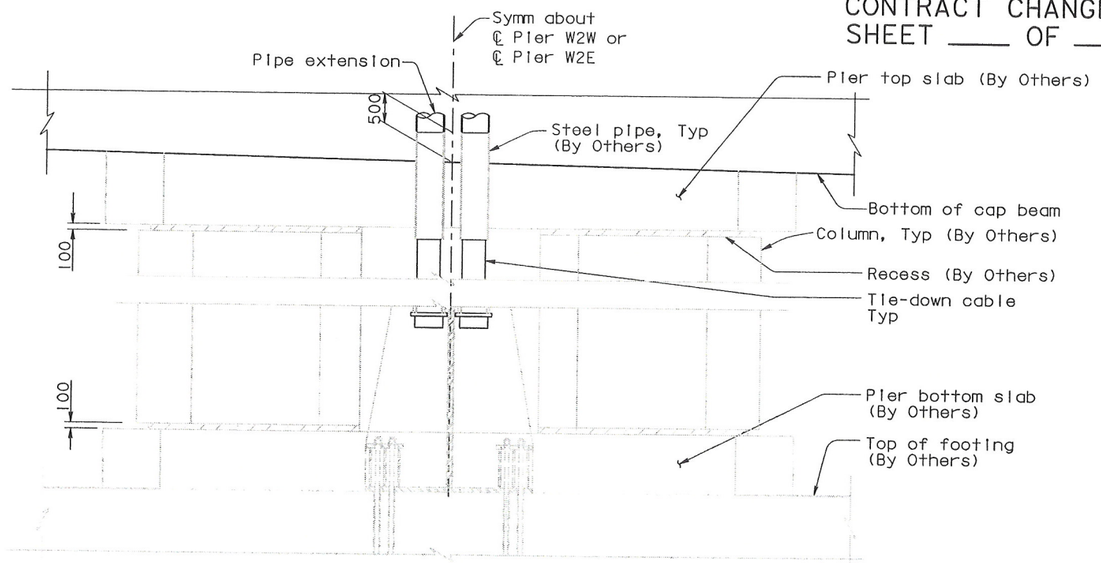

SECTION D-D
1:50

NOTES:

1. For cable tie-down, see "Cable Tie-Down Details No. 1" through "Cable Tie-Down Details No. 4" sheets. △1

100 % PS&E

TIME PLOTTED => 09:32:16
DATE PLOTTED => 14 JUL 2006
USERNAME => vignatovs

ALL DIMENSIONS ARE IN MILLIMETERS UNLESS OTHERWISE SHOWN

R. Vallzadeh/V. Toan/Y.L./W.L./F.C.
DESIGN OVERSIGHT
SIGN OFF DATE 07/21/06

	BY	CHECKED
DESIGN	J. Sun	J. Leventini
DETAILS	J. Duxbury	J. Leventini
QUANTITIES	J. Duxbury	S. Shi

PREPARED FOR THE STATE OF CALIFORNIA DEPARTMENT OF TRANSPORTATION

R. Manzanarez
PROJECT ENGINEER

BRIDGE NO. 34-0006L/R
KILOMETER POST 13.2/13.9

CU 04
EA 0120F1

SAN FRANCISCO OAKLAND BAY BRIDGE
EAST SPAN SEISMIC SAFETY PROJECT
SELF-ANCHORED SUSPENSION BRIDGE
(SUPERSTRUCTURE & TOWER)

PIER W2 DETAILS NO. 4

Rev. Date: 5-18-98

ORIGINAL SCALE IN MILLIMETERS FOR REDUCED PLANS 0 10 20 30 40 50 60 70 80 90 100

DISREGARD PRINTS BEARING EARLIER REVISION DATES

REVISION DATES (PRELIMINARY STAGE ONLY): 01/18/99 05/18/99 08/18/99 05/24/01 04/08/02 07/08/02 12/19/02

SHEET 33R1 OF

FILE => p:\bb\04-012001\sas readv august 2005\cco#23\aepir02.dgn

MARK	DATE	DESCRIPTIONS	BY	CH'D
1	07/21/06	W2 CAP BEAM ISD	JD	NV

REVISIONS

CONTRACT CHANGE ORDER NO. ____
SHEET ___ OF ___

FOR REVISIONS ONLY

REGISTERED PROFESSIONAL ENGINEER James P. Duxbury No. C 64677 Exp. 06/30/07 CIVIL STATE OF CALIFORNIA

Caltrans Metric

DIST.	COUNTY	ROUTE	KILOMETER POST TOTAL PROJECT	SHEET NO.	TOTAL SHEETS
04	SF	80	13.2/13.9	451R1	1204

REGISTERED ENGINEER - CIVIL

12-6-04
PLANS APPROVAL DATE

REGISTERED PROFESSIONAL ENGINEER John Sun No. C 54648 Exp. 12/31/05 CIVIL STATE OF CALIFORNIA

The State of California or its officers or agents shall not be responsible for the accuracy or completeness of electronic copies of this plan sheet.

T.Y. LIN / MOFFATT & NICHOL
825 BATTERY STREET
SAN FRANCISCO, CA 94111

Caltrans now has a web site! To get to the web site, go to: http://www.dot.ca.gov

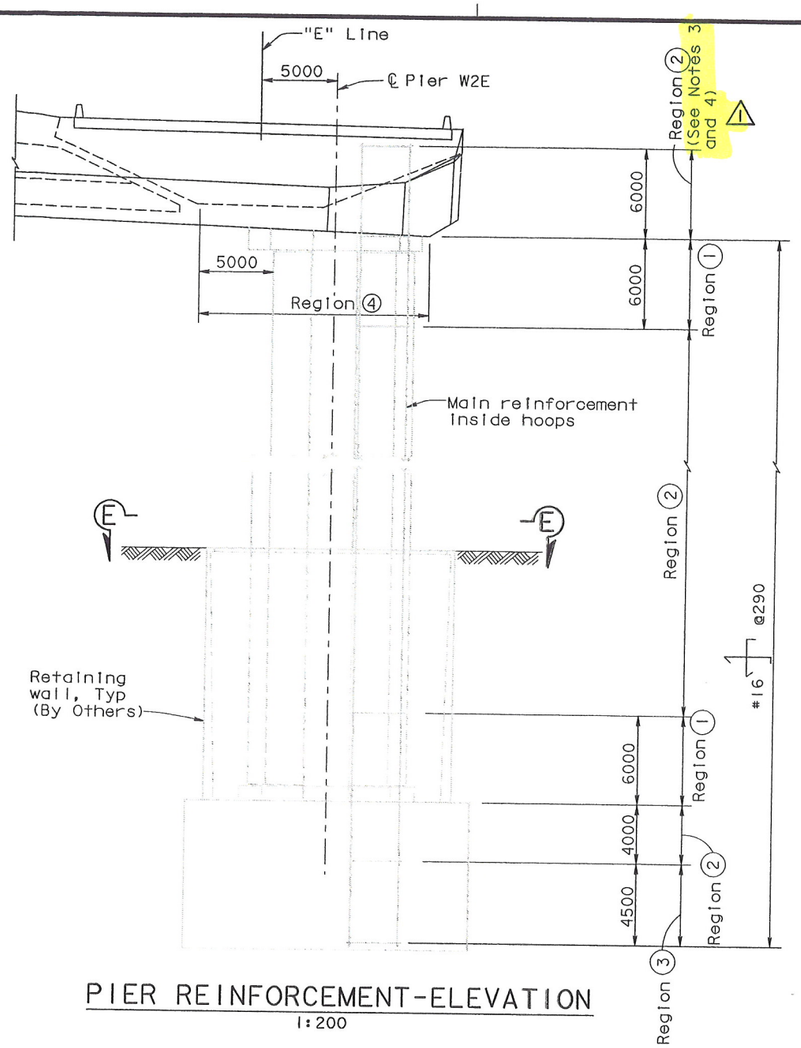

PIER REINFORCEMENT-ELEVATION
1:200

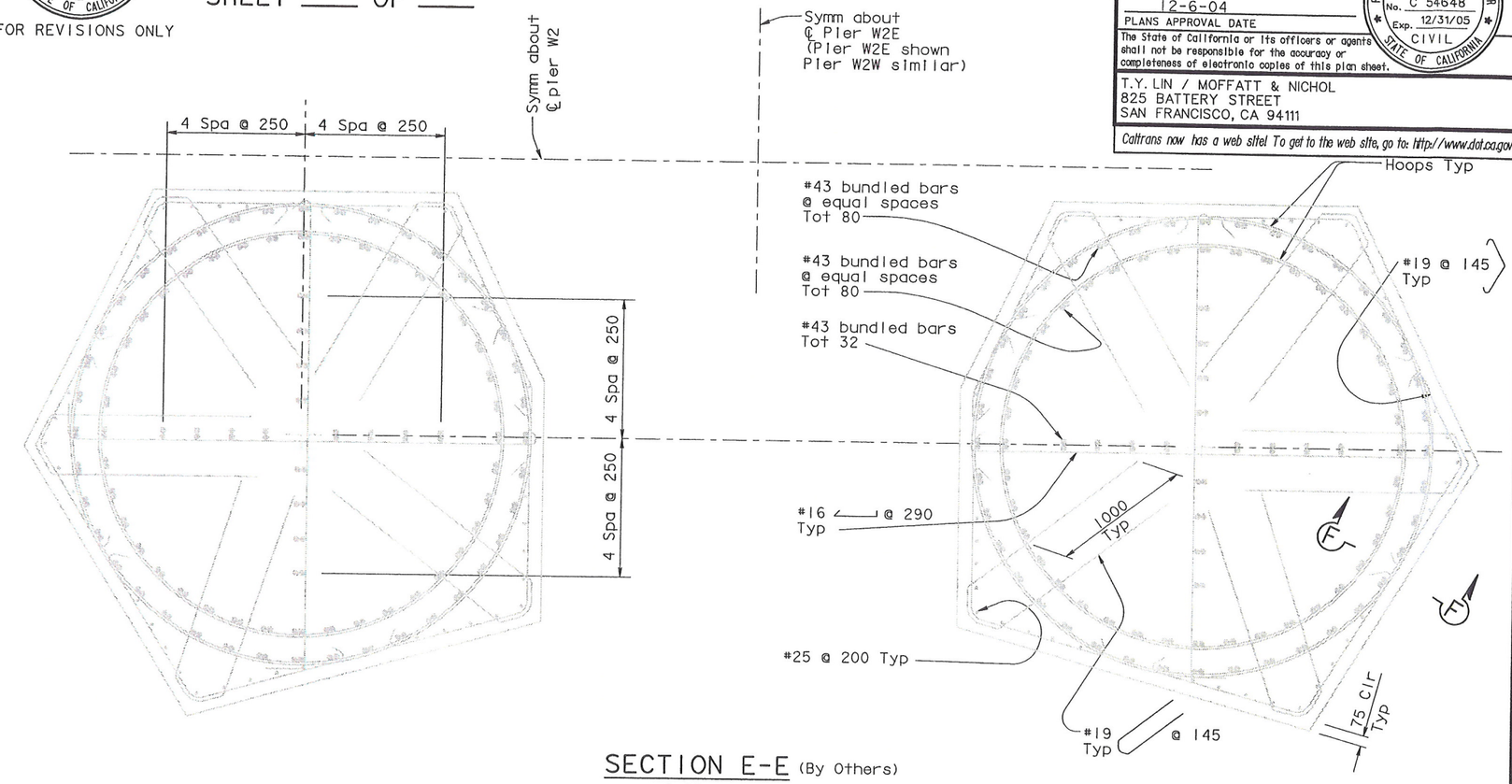

SECTION E-E (By Others)
1:20

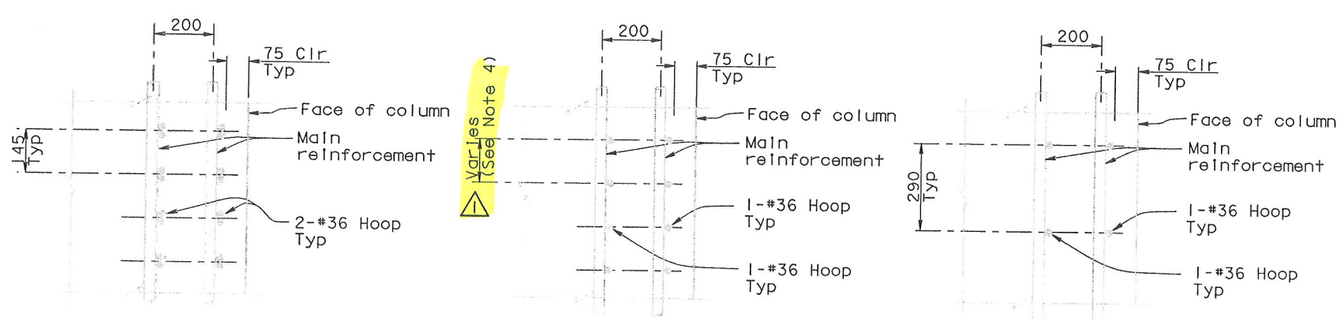

At Region ① (By Others)

At Region ② (By Others)

At Region ③ (By Others)

SECTION F-F
1:10

NOTES:

1. Reinforcement is for information only, and by Others.
2. Main reinforcement and hoop reinforcement are "Ultimate" butt splices.
3. Contractor shall remove the corrosion protection from all reinforcing above the pier top slab and shall roughen the existing Pier W2 concrete surface to a minimum of 5 mm amplitude prior to pouring the W2 cap beam concrete.
4. Hoops shall be removed and replaced to facilitate placement of W2 cap beam reinforcement per "W2 Cap Beam Reinforcement Details" sheets.
5. No splices permitted in region ④.

ALL DIMENSIONS ARE IN MILLIMETERS UNLESS OTHERWISE SHOWN

R. Valizadeh/V. Toan/Y. L./W. L./F. C.
DESIGN OVERSIGHT
SIGN OFF DATE 07/21/06
Rev. Date: 5-18-98

	BY	CHECKED
DESIGN	J. Sun	J. Leventini
DETAILS	J. Duxbury	J. Leventini
QUANTITIES	J. Duxbury	S. Shi

PREPARED FOR THE STATE OF CALIFORNIA DEPARTMENT OF TRANSPORTATION

R. Manzanarez
PROJECT ENGINEER

BRIDGE NO. 34-0006L/R
KILOMETER POST 13.2/13.9

SAN FRANCISCO OAKLAND BAY BRIDGE
EAST SPAN SEISMIC SAFETY PROJECT
SELF-ANCHORED SUSPENSION BRIDGE
(SUPERSTRUCTURE & TOWER)

PIER W2 DETAILS NO. 5

ORIGINAL SCALE IN MILLIMETERS FOR REDUCED PLANS 0 10 20 30 40 50 60 70 80 90 100

CU 04
EA 0120F1

DISREGARD PRINTS BEARING EARLIER REVISION DATES

REVISION DATES (PRELIMINARY STAGE ONLY) 05/18/99 09/08/99 05/31/01 01/08/02 01/09/02 12/19/02

SHEET 34R1 OF

FILE => p:\bb\04-012001\sas readv august 2005\cco#23\aeplr03.dgn

100% PS&E

USERNAME => vignatovski DATE PLOTTED => 14 JUL 2006 TIME PLOTTED => 09:33:19

DIST.	COUNTY	ROUTE	KILOMETER POST TOTAL PROJECT	SHEET NO.	TOTAL SHEETS
04	SF	80	13.2/13.9	455R1	1204

REGISTERED ENGINEER - CIVIL

12-6-04
PLANS APPROVAL DATE

REGISTERED PROFESSIONAL ENGINEER John Sun No. C 54648 Exp. 12/31/05 CIVIL STATE OF CALIFORNIA

The State of California or its officers or agents shall not be responsible for the accuracy or completeness of electronic copies of this plan sheet.

T.Y. LIN / MOFFATT & NICHOL
825 BATTERY STREET
SAN FRANCISCO, CA 94111

Caltrans now has a web site! To get to the web site, go to: http://www.dot.ca.gov

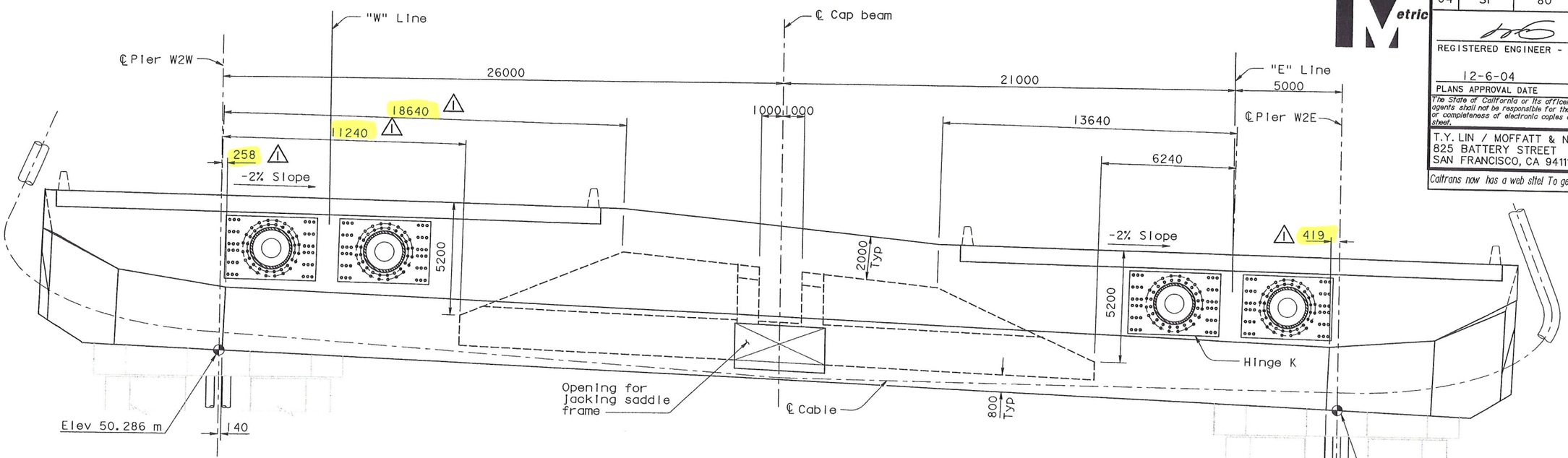

ELEVATION A-A
1:100

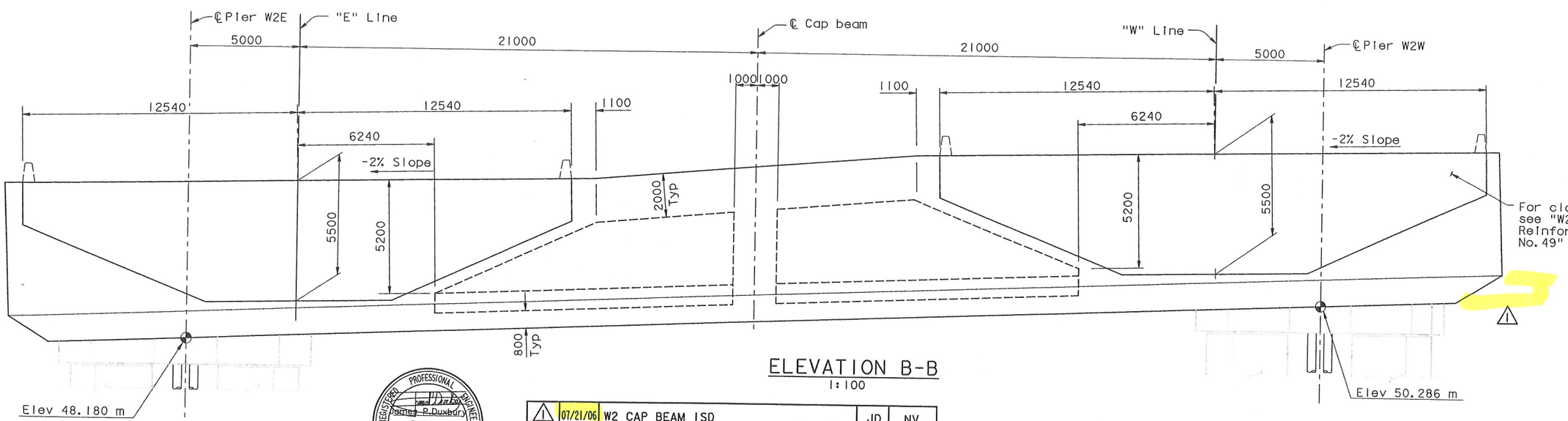

ELEVATION B-B
1:100

REGISTERED PROFESSIONAL ENGINEER James P. Duxbury No. C 64677 Exp. 06/30/07 CIVIL STATE OF CALIFORNIA

FOR REVISIONS ONLY

MARK	DATE	DESCRIPTIONS	BY	CH'D
1	07/21/06	W2 CAP BEAM ISD	JD	NV

REVISIONS

CONTRACT CHANGE ORDER NO. _____
SHEET ___ OF ___

ALL DIMENSIONS ARE IN MILLIMETERS UNLESS OTHERWISE SHOWN

R. Vallizadeh/V. Toan/Y.L./W.L./F.C.
DESIGN OVERSIGHT
SIGN OFF DATE 07/21/06
Rev. Date: 5-18-98

	BY	CHECKED
DESIGN	J. Sun	M. Chen
DETAILS	S. Shi	M. Chen
QUANTITIES	S. Shi	D. Harrison

PREPARED FOR THE STATE OF CALIFORNIA DEPARTMENT OF TRANSPORTATION

R. Manzanarez
PROJECT ENGINEER

BRIDGE NO. 34-0006L/R
KILOMETER POST 13.2/13.9

SAN FRANCISCO OAKLAND BAY BRIDGE
EAST SPAN SEISMIC SAFETY PROJECT
SELF-ANCHORED SUSPENSION BRIDGE
(SUPERSTRUCTURE & TOWER)

W2 CAP BEAM DIMENSION DETAILS NO. 2

ORIGINAL SCALE IN MILLIMETERS FOR REDUCED PLANS 0 10 20 30 40 50 60 70 80 90 100

CU 04
EA 0120F1

DISREGARD PRINTS BEARING EARLIER REVISION DATES

REVISION DATES (PRELIMINARY STAGE ONLY): 05/18/99 08/06/99 05/31/01 04/09/02 07/01/02 12/18/02 09/06/04

SHEET 038R1 OF

FILE => p:\bb\04-012001\sas ready august 2005\cco#23\aecap02.dgn

100 % PS&E

USERNAME => vlignatovski DATE PLOTTED => 14 JUL 2006 TIME PLOTTED => 09:34:12

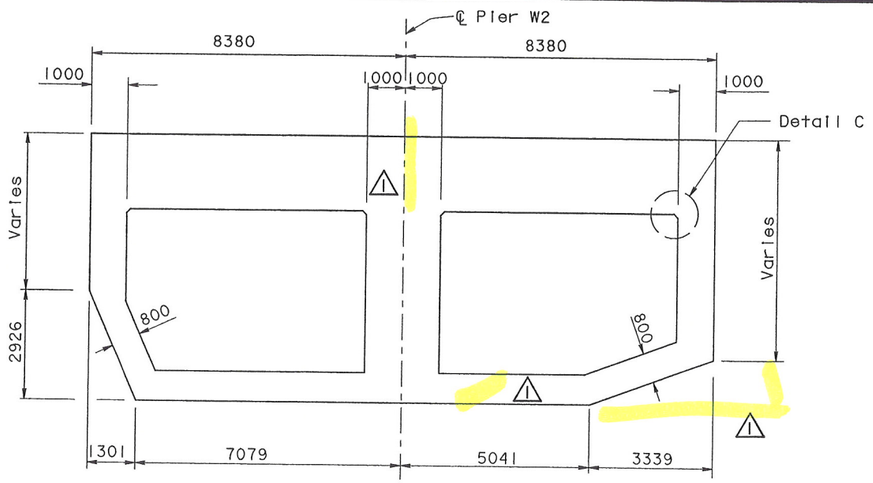

SECTION C-C
1:80

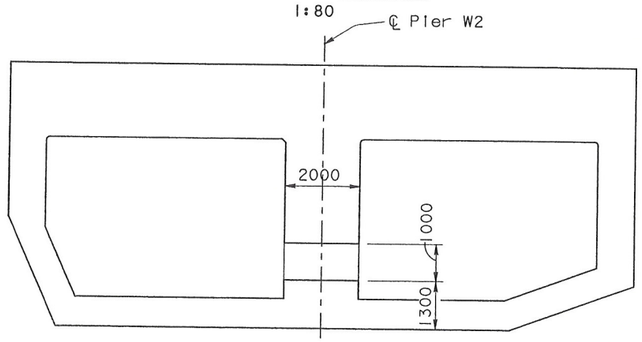

SECTION D-D
1:80

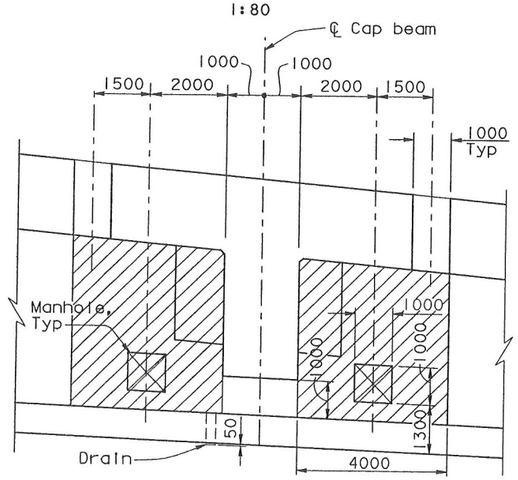

SECTION E-E
1:80

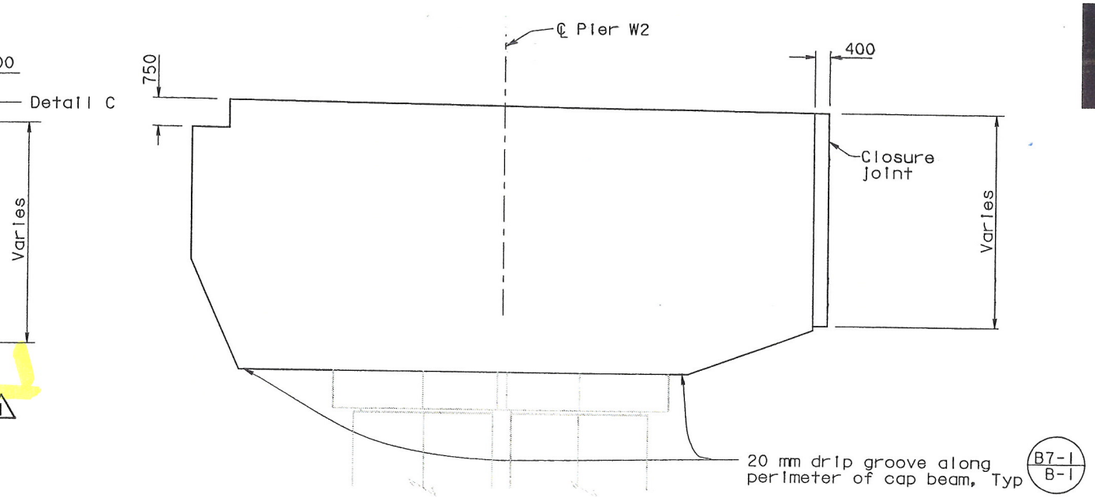

SECTION F-F
1:80

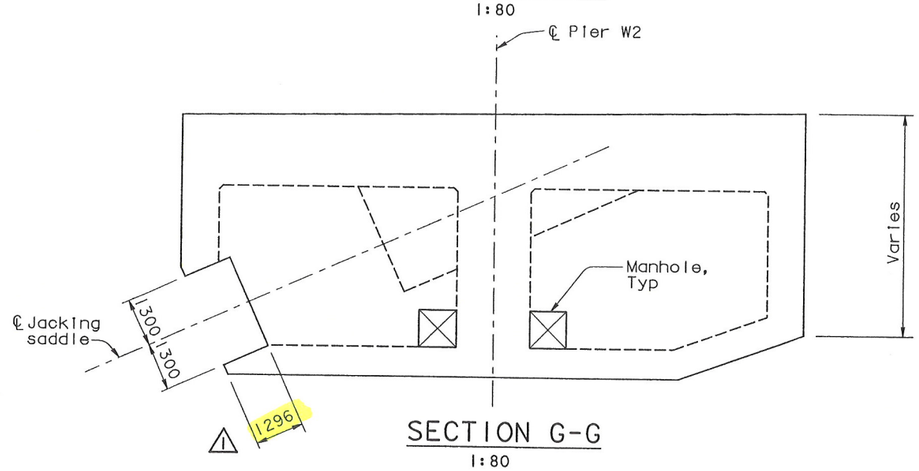

SECTION G-G
1:80

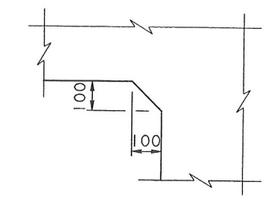

TYPICAL CHAMFER DETAIL

DETAIL C
1:10

DIST.	COUNTY	ROUTE	KILOMETER POST TOTAL PROJECT	SHEET NO.	TOTAL SHEETS
04	SF	80	13.2/13.9	456R1	1204

REGISTERED ENGINEER - CIVIL

12-6-04
PLANS APPROVAL DATE

REGISTERED PROFESSIONAL ENGINEER John Sun No. C 54648 Exp. 12/31/05 CIVIL STATE OF CALIFORNIA

The State of California or its officers or agents shall not be responsible for the accuracy or completeness of electronic copies of this plan sheet.

T.Y. LIN / MOFFATT & NICHOL
825 BATTERY STREET
SAN FRANCISCO, CA 94111

Caltrans now has a web site! To get to the web site, go to: http://www.dot.ca.gov

REGISTERED PROFESSIONAL ENGINEER James P. Duxbury No. C 64677 Exp. 06/30/07 CIVIL STATE OF CALIFORNIA

FOR REVISIONS ONLY

MARK	DATE	DESCRIPTIONS	BY	CH'D
1	07/21/06	W2 CAP BEAM ISD	JD	NV
		REVISIONS		

CONTRACT CHANGE ORDER NO. _____
SHEET ____ OF ____

LEGEND:

All forms to be removed after construction of W2 cap beam deck.

NOTES:

1. For additional details, see "W2 Cap Beam Dimension Details No.1" sheet.

100% PS&E

TIME PLOTTED => 09:35:25
DATE PLOTTED => 14 JUL 2006
USERNAME => vignatovsk

ALL DIMENSIONS ARE IN MILLIMETERS UNLESS OTHERWISE SHOWN

R. Vallzadeh/V. Toan/Y.L./W.L./F.C.
DESIGN OVERSIGHT
SIGN OFF DATE 07/21/06
Rev. Date: 5-18-98

	BY	CHECKED	
DESIGN	J. Sun	M. Chen	
DETAILS	S. Shi	M. Chen	
QUANTITIES	S. Shi	D. Harrison	

PREPARED FOR THE STATE OF CALIFORNIA DEPARTMENT OF TRANSPORTATION

R. Manzanarez
PROJECT ENGINEER

BRIDGE NO. 34-0006L/R
KILOMETER POST 13.2/13.9

SAN FRANCISCO OAKLAND BAY BRIDGE
EAST SPAN SEISMIC SAFETY PROJECT
SELF-ANCHORED SUSPENSION BRIDGE
(SUPERSTRUCTURE & TOWER)

W2 CAP BEAM DIMENSION DETAILS NO.3

ORIGINAL SCALE IN MILLIMETERS FOR REDUCED PLANS 0 10 20 30 40 50 60 70 80 90 100

CU 04
EA 0120F1

DISREGARD PRINTS BEARING EARLIER REVISION DATES

REVISION DATES (PRELIMINARY STAGE ONLY) 05/18/99 08/20/99 05/31/01 04/08/02 07/01/02 12/19/02

SHEET 039R1 OF

FILE => p:\bb\04-012001\sas readv august 2005\cco#23\aecap03.dgn

DIST.	COUNTY	ROUTE	KILOMETER POST TOTAL PROJECT	SHEET NO.	TOTAL SHEETS
04	SF	80	13.2/13.9	457R1	1204

REGISTERED ENGINEER - CIVIL

12-6-04
PLANS APPROVAL DATE

PROFESSIONAL ENGINEER REGISTERED John Sun No. C 54648 Exp. 12/31/05 CIVIL STATE OF CALIFORNIA

The State of California or its officers or agents shall not be responsible for the accuracy or completeness of electronic copies of this plan sheet.

T.Y. LIN / MOFFATT & NICHOL
825 BATTERY STREET
SAN FRANCISCO, CA 94111

Caltrans now has a web site! To get to the web site, go to: http://www.dot.ca.gov

Caltrans Metric

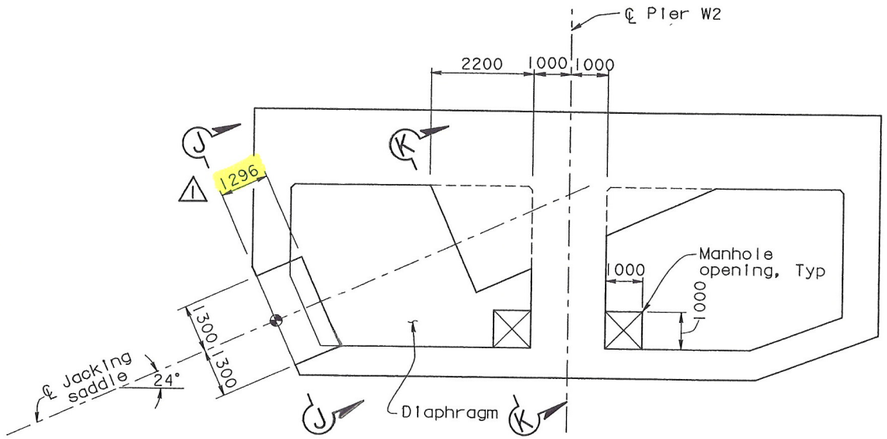

Stage 1

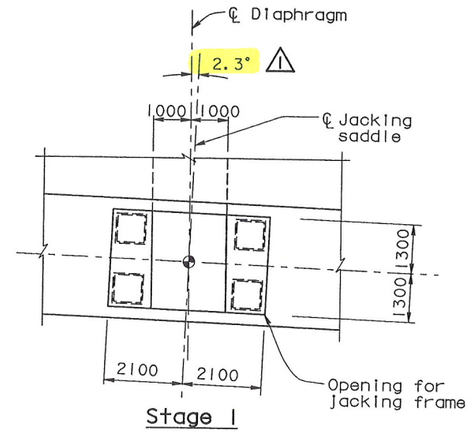

Stage 1

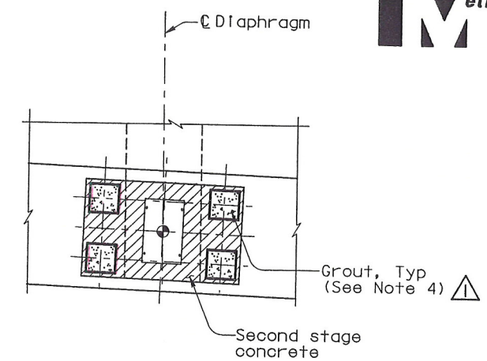

Stage 2

SECTION J-J
1:80

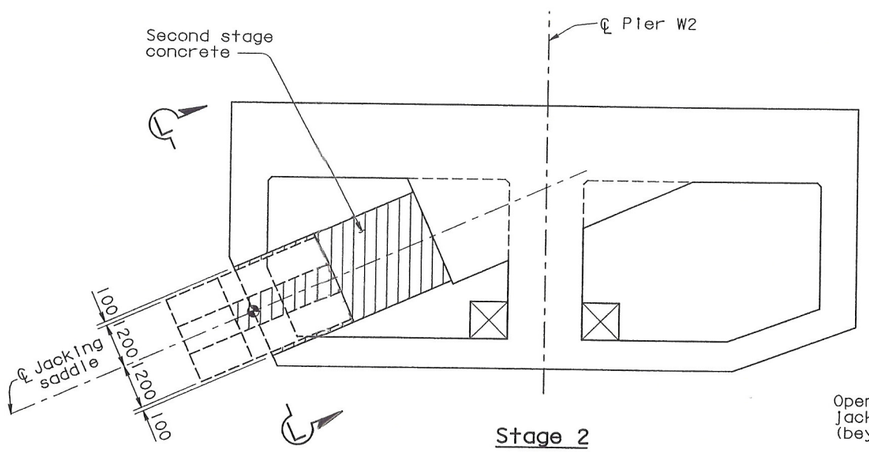

Stage 2

SECTION H-H
1:80

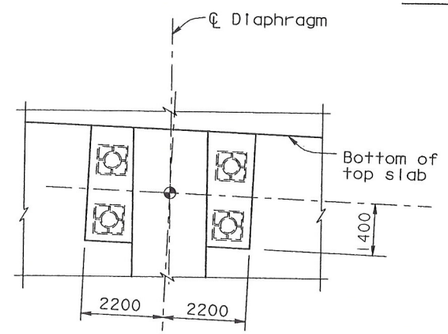

Stage 1

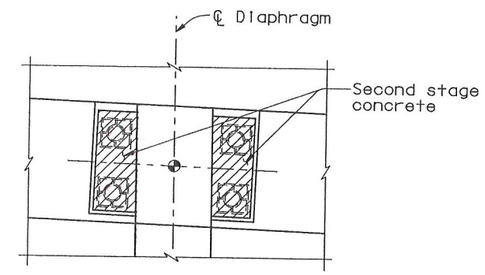

Stage 2

SECTION K-K
1:80

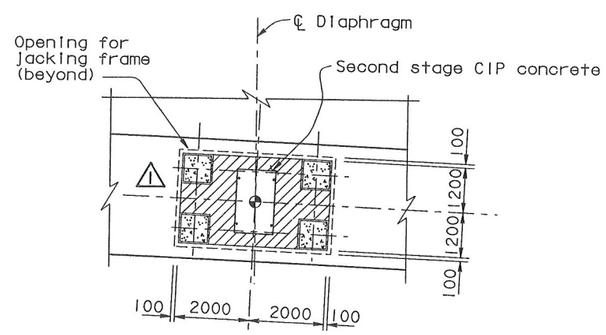

Stage 2

SECTION L-L
1:80

PROFESSIONAL ENGINEER REGISTERED James P. Duxbury No. C 64677 Exp. 06/30/07 CIVIL STATE OF CALIFORNIA

FOR REVISIONS ONLY

MARK	DATE	DESCRIPTIONS	BY	CH'D
1	07/21/06	W2 CAP BEAM ISD, GROUT LEGS	JD	NV
		REVISIONS		

CONTRACT CHANGE ORDER NO. _____
SHEET ____ OF ____

NOTES:

1. For additional details, see "W2 Cap Beam Dimension Details No. 1" sheet.
2. Jacking saddle and jacking frame not shown for clarity.
3. Stage 1: W2 Cap Beam construction is complete; main cable jacking has not started.

   Stage 2: Main cable jacking is complete and Stage 2 concrete poured.
4. (1) After all jacking operations have been completed and before the Stage 2 concrete is poured, the Jacking Frame support legs shall be filled with high strength nonshrink grout (f'c=60 MPa). Grouting details shall be submitted to the Engineer for review and approval.

ALL DIMENSIONS ARE IN MILLIMETERS UNLESS OTHERWISE SHOWN

R. Valizadeh/V. Toan/Y.L./W.L./F.C.
DESIGN OVERSIGHT
Roya Valizadeh / Vong Toan / Y. Lui
SIGN OFF DATE 07/21/06

	BY	CHECKED
DESIGN	J. Sun	M. Chen
DETAILS	S. Shi	M. Chen
QUANTITIES	S. Shi	D. Harrison

PREPARED FOR THE STATE OF CALIFORNIA DEPARTMENT OF TRANSPORTATION

R. Manzanarez
PROJECT ENGINEER

BRIDGE NO. 34-0006L/R
KILOMETER POST 13.2/13.9

SAN FRANCISCO OAKLAND BAY BRIDGE
EAST SPAN SEISMIC SAFETY PROJECT
SELF-ANCHORED SUSPENSION BRIDGE
(SUPERSTRUCTURE & TOWER)

W2 CAP BEAM DIMENSION DETAILS NO. 4

Rev. Date: 5-18-98

ORIGINAL SCALE IN MILLIMETERS FOR REDUCED PLANS 0 10 20 30 40 50 60 70 80 90 100

CU 04
EA 0120F1

DISREGARD PRINTS BEARING EARLIER REVISION DATES

REVISION DATES (PRELIMINARY STAGE ONLY): 05/31/01 01/08/02 07/01/02 12/19/02

SHEET 040R1 OF

FILE => p:\bb\04-012001\sas readv august 2005\cco#23\aecap03a.dgn

USERNAME => vignarovsk DATE PLOTTED => 14 JUL 2006 TIME PLOTTED => 09:36:11

100 % PS&E

DIST.	COUNTY	ROUTE	KILOMETER POST TOTAL PROJECT	SHEET NO.	TOTAL SHEETS
04	SF	80	13.2/13.9	458R1	1204

REGISTERED ENGINEER - CIVIL

12-6-04
PLANS APPROVAL DATE

REGISTERED PROFESSIONAL ENGINEER John Sun No. C 54648 Exp. 12/31/05 CIVIL STATE OF CALIFORNIA

The State of California or its officers or agents shall not be responsible for the accuracy or completeness of electronic copies of this plan sheet.

T.Y. LIN / MOFFATT & NICHOL
825 BATTERY STREET
SAN FRANCISCO, CA 94111

Caltrans now has a web site! To get to the web site, go to: http://www.dot.ca.gov

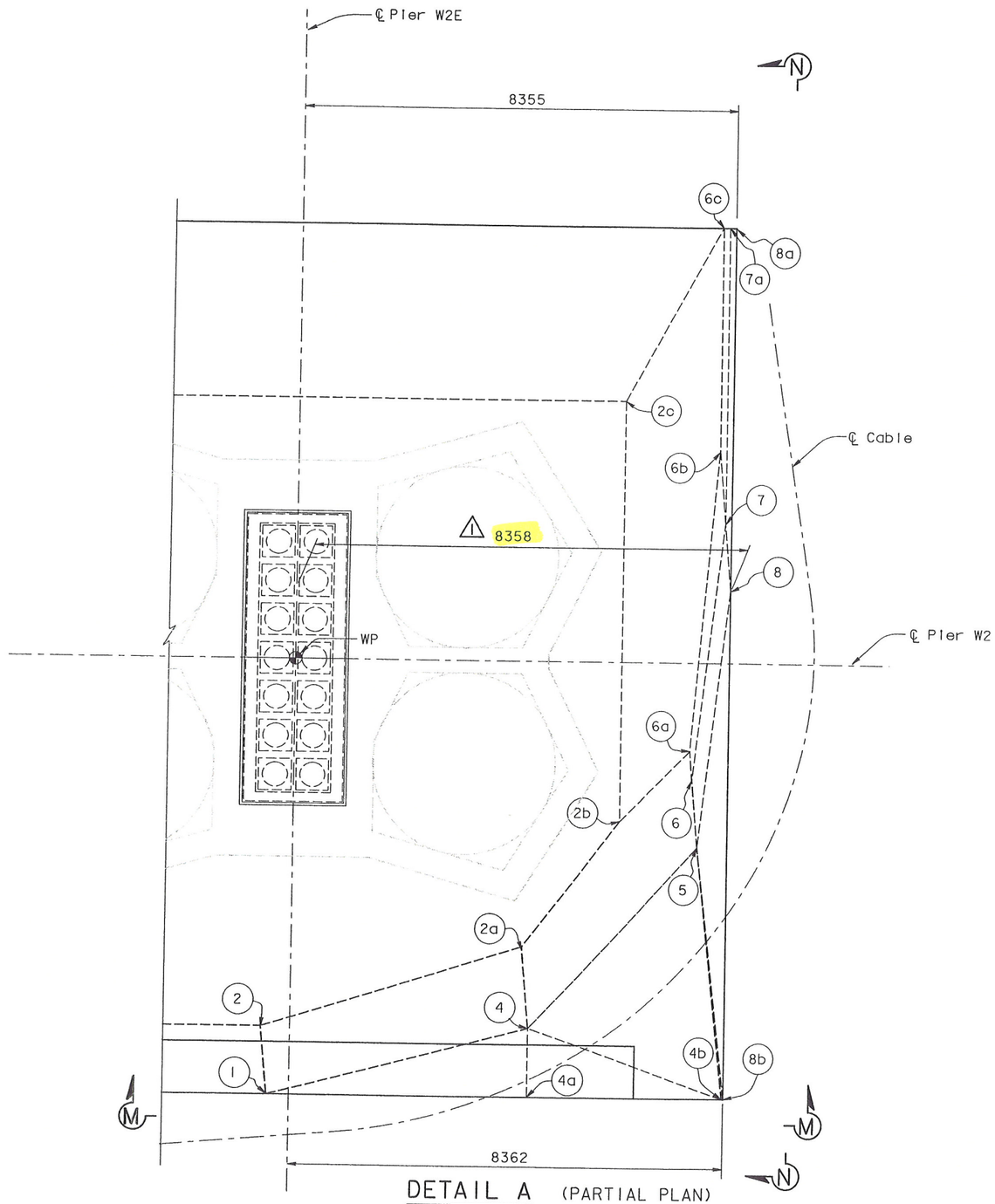

DETAIL A (PARTIAL PLAN)
1:50

REGISTERED PROFESSIONAL ENGINEER James P. Duxbury No. C 64677 Exp. 06/30/07 CIVIL STATE OF CALIFORNIA

FOR REVISIONS ONLY

MARK	DATE	DESCRIPTIONS	BY	CH'D
1	07/21/06	W2 CAP BEAM ISD	JD	NV

REVISIONS

CONTRACT CHANGE ORDER NO. _____
SHEET ____ OF ____

LEGEND:

(-) Indicates Cap Beam Dimension Control Point

NOTES:

1. For additional details, see "W2 Cap Beam Dimension Details No. 1" sheet.
2. For Sections M-M and N-N, see "W2 Cap Beam Dimension Details No. 6" sheet.

100 % PS&E

TIME PLOTTED => 09:36:58
DATE PLOTTED => 14 JUL 2006
USERNAME => vignatovski

R. Valizadeh/V. Toan/Y. L./W. L./F. C.
DESIGN OVERSIGHT
SIGN OFF DATE 07/21/06
Rev. Date: 5-18-98

	BY	CHECKED
DESIGN	J. Sun	M. Chen
DETAILS	S. Shi	M. Chen
QUANTITIES	S. Shi	D. Harrison

ORIGINAL SCALE IN MILLIMETERS FOR REDUCED PLANS 0 10 20 30 40 50 60 70 80 90 100

PREPARED FOR THE STATE OF CALIFORNIA DEPARTMENT OF TRANSPORTATION

R. Manzanarez
PROJECT ENGINEER

ALL DIMENSIONS ARE IN MILLIMETERS UNLESS OTHERWISE SHOWN

BRIDGE NO. 34-0006L/R
KILOMETER POST 13.2/13.9

CU 04
EA 0120F1

DISREGARD PRINTS BEARING EARLIER REVISION DATES

SAN FRANCISCO OAKLAND BAY BRIDGE
EAST SPAN SEISMIC SAFETY PROJECT
SELF-ANCHORED SUSPENSION BRIDGE
(SUPERSTRUCTURE & TOWER)

W2 CAP BEAM DIMENSION DETAILS NO. 5

REVISION DATES (PRELIMINARY STAGE ONLY) 05/15/99 08/06/99 05/14/01 04/08/02 07/24/02 12/19/02

SHEET 041R1 OF

FILE => p:\bb\04-012001\sas readv august 2005\cco#23\decap04.dgn

Caltrans now has a web site! To get to the web site, go to: http://www.dot.ca.gov

Caltrans Metric

DIST.	COUNTY	ROUTE	KILOMETER POST TOTAL PROJECT	SHEET NO.	TOTAL SHEETS
04	SF	80	13.2/13.9	459R1	1204

REGISTERED ENGINEER - CIVIL

12-6-04
PLANS APPROVAL DATE

REGISTERED PROFESSIONAL ENGINEER John Sun No. C 54648 Exp. 12/31/05 CIVIL STATE OF CALIFORNIA

The State of California or its officers or agents shall not be responsible for the accuracy or completeness of electronic copies of this plan sheet.

T.Y. LIN / MOFFATT & NICHOL
825 BATTERY STREET
SAN FRANCISCO, CA 94111

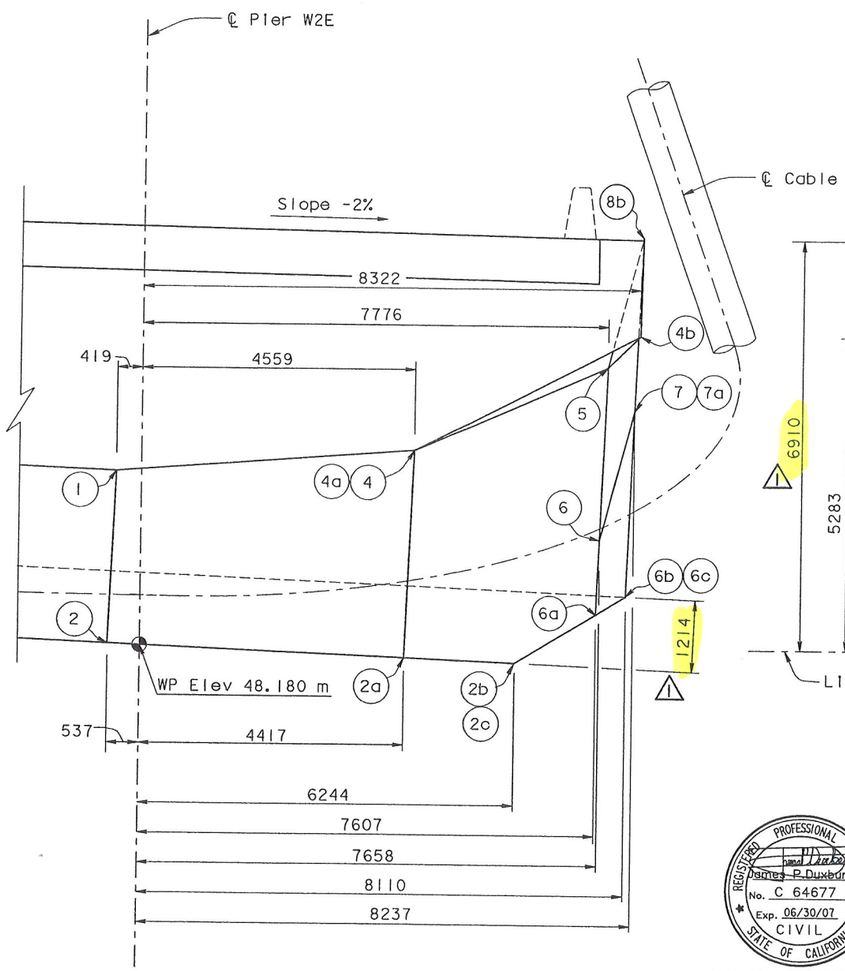

SECTION M-M
1:50

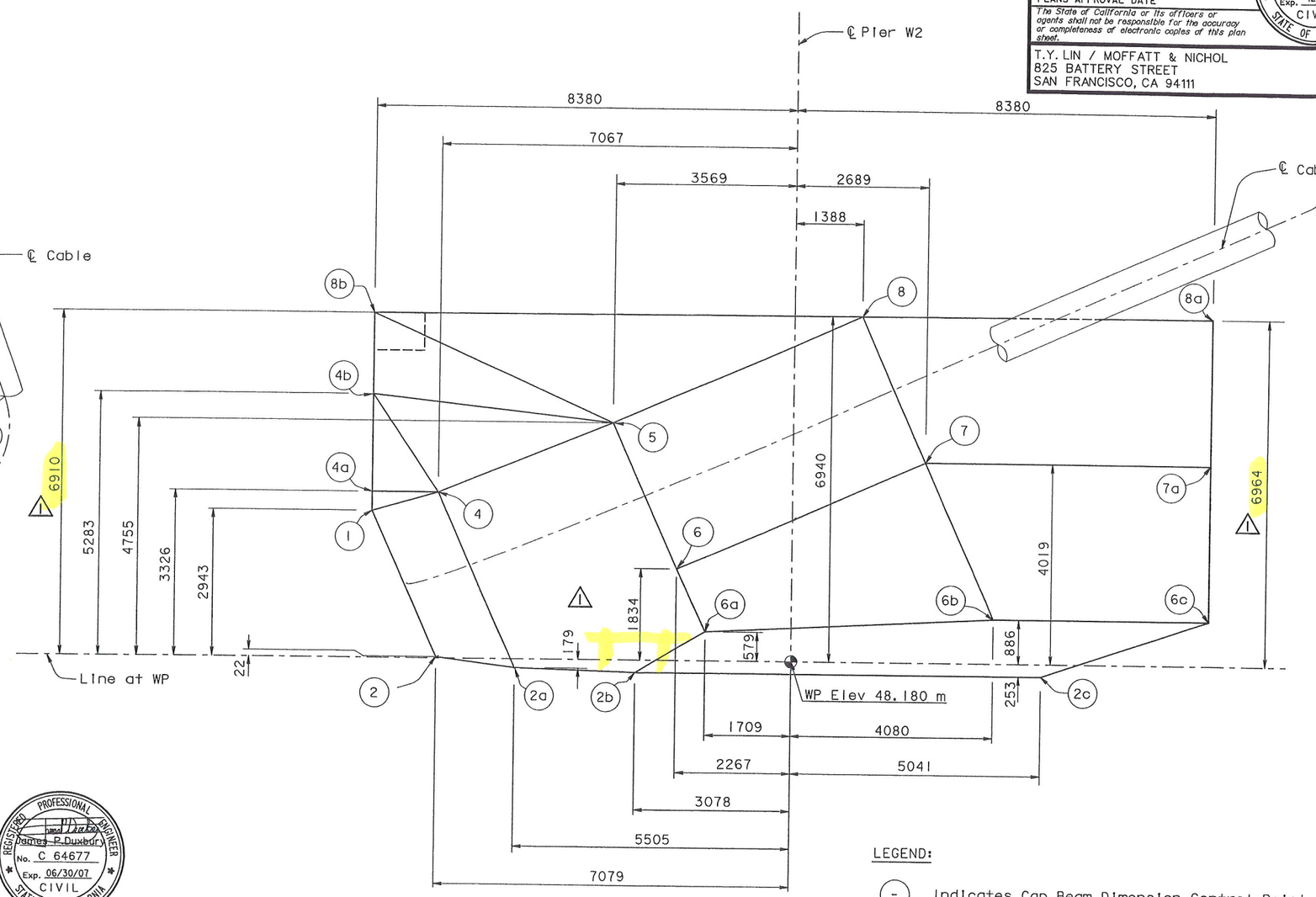

SECTION N-N
1:50

LEGEND:

(-) Indicates Cap Beam Dimension Control Point

REGISTERED PROFESSIONAL ENGINEER James P. Duxbury No. C 64677 Exp. 06/30/07 CIVIL STATE OF CALIFORNIA

FOR REVISIONS ONLY

MARK	DATE	DESCRIPTIONS	BY	CH'D
1	07/21/06	W2 CAP BEAM ISD	JD	NV

REVISIONS

CONTRACT CHANGE ORDER NO. _____
SHEET ____ OF ____

ALL DIMENSIONS ARE IN MILLIMETERS UNLESS OTHERWISE SHOWN

R. Valizadeh/V. Toan/Y.L./W.L./F.C.
DESIGN OVERSIGHT
SIGN OFF DATE 07/21/06

Rev. Date: 5-18-98

	BY	CHECKED
DESIGN	J. Sun	M. Chen
DETAILS	S. Shi	M. Chen
QUANTITIES	S. Shi	D. Harrison

ORIGINAL SCALE IN MILLIMETERS FOR REDUCED PLANS 0 10 20 30 40 50 60 70 80 90 100

PREPARED FOR THE STATE OF CALIFORNIA DEPARTMENT OF TRANSPORTATION

R. Manzanarez
PROJECT ENGINEER

CU 04
EA 0120F1

BRIDGE NO. 34-0006L/R
KILOMETER POST 13.2/13.9

DISREGARD PRINTS BEARING EARLIER REVISION DATES

REVISION DATES (PRELIMINARY STAGE ONLY): 05/18/99 08/06/99 05/31/01 04/08/02 07/24/02 12/19/02

SAN FRANCISCO OAKLAND BAY BRIDGE
EAST SPAN SEISMIC SAFETY PROJECT
SELF-ANCHORED SUSPENSION BRIDGE
(SUPERSTRUCTURE & TOWER)

W2 CAP BEAM DIMENSION DETAILS NO. 6

SHEET 042R1 OF

100 % PS&E

USERNAME => vignatovsk DATE PLOTTED => 14 JUL 2006 TIME PLOTTED => 09:37:53

FILE => p:\bb\04-012001\sas ready august 2005\cco#23\aecap05.dgn

DIST.	COUNTY	ROUTE	KILOMETER POST TOTAL PROJECT	SHEET NO.	TOTAL SHEETS
04	SF	80	13.2/13.9	460R1	1204

REGISTERED ENGINEER - CIVIL

12-6-04
PLANS APPROVAL DATE

REGISTERED PROFESSIONAL ENGINEER John Sun No. C 54648 Exp. 12/31/05 CIVIL STATE OF CALIFORNIA

The State of California or its officers or agents shall not be responsible for the accuracy or completeness of electronic copies of this plan sheet.

T.Y. LIN / MOFFATT & NICHOL
825 BATTERY STREET
SAN FRANCISCO, CA 94111

Caltrans now has a web site! To get to the web site, go to: http://www.dot.ca.gov

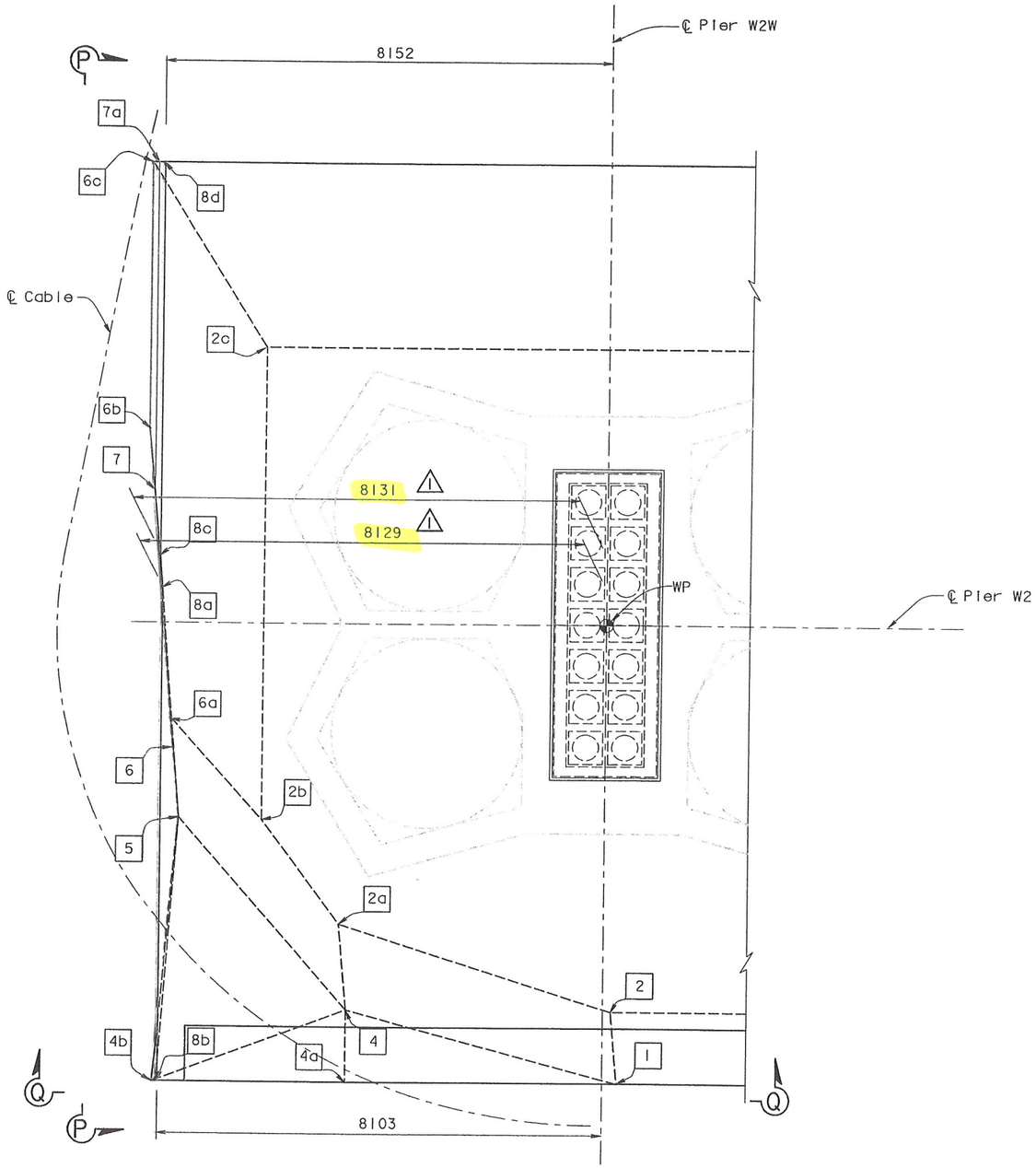

DETAIL B (PARTIAL PLAN)
1:50

REGISTERED PROFESSIONAL ENGINEER Jeffrey P. Duxbury No. C 64677 Exp. 06/30/07 CIVIL STATE OF CALIFORNIA

FOR REVISIONS ONLY

MARK	DATE	DESCRIPTIONS	BY	CH'D
1	07/21/06	W2 CAP BEAM ISD	JD	NV

REVISIONS

CONTRACT CHANGE ORDER NO. _____
SHEET ____ OF ____

LEGEND:

[-] Indicates Cap Beam Dimensions Control Point

NOTES:

1. For additional details, see "W2 Cap Beam Dimension Details No. 1" sheet.
2. For Sections P-P and Q-Q, see "W2 Cap Beam Dimension Details No. 8" sheet.

100 % PS&E

ALL DIMENSIONS ARE IN MILLIMETERS UNLESS OTHERWISE SHOWN

R. Vallizadeh/V. Toan/Y.L./W.L./F.C.
DESIGN OVERSIGHT
SIGN OFF DATE 07/21/06

	BY	CHECKED
DESIGN	J. Sun	M. Chen
DETAILS	S. Shi	M. Chen
QUANTITIES	S. Shi	D. Harrison

PREPARED FOR THE STATE OF CALIFORNIA DEPARTMENT OF TRANSPORTATION

R. Manzanarez
PROJECT ENGINEER

BRIDGE NO. 34-0006L/R
KILOMETER POST 13.2/13.9

SAN FRANCISCO OAKLAND BAY BRIDGE
EAST SPAN SEISMIC SAFETY PROJECT
SELF-ANCHORED SUSPENSION BRIDGE
(SUPERSTRUCTURE & TOWER)

W2 CAP BEAM DIMENSION DETAILS NO. 7

Rev. Date: 5-18-98

ORIGINAL SCALE IN MILLIMETERS FOR REDUCED PLANS 0 10 20 30 40 50 60 70 80 90 100

CU 04
EA 0120F1

DISREGARD PRINTS BEARING EARLIER REVISION DATES

REVISION DATES (PRELIMINARY STAGE ONLY) 05/18/99 08/20/99 05/24/01 04/08/02 07/09/02 12/19/02

SHEET 043R1 OF

FILE => p:\bb\04-012001\sas ready august 2005\coo#23\aecap06.dgn

USERNAME => vignatovsk DATE PLOTTED => 14 JUL 2006 TIME PLOTTED => 09:39:40

DIST.	COUNTY	ROUTE	KILOMETER POST TOTAL PROJECT	SHEET NO.	TOTAL SHEETS
04	SF	80	13.2/13.9	461R1	1204

REGISTERED ENGINEER - CIVIL

12-6-04
PLANS APPROVAL DATE

REGISTERED PROFESSIONAL ENGINEER John Sun No. C 54648 Exp. 12/31/05 CIVIL STATE OF CALIFORNIA

The State of California or its officers or agents shall not be responsible for the accuracy or completeness of electronic copies of this plan sheet.

T.Y. LIN / MOFFATT & NICHOL
825 BATTERY STREET
SAN FRANCISCO, CA 94111

Caltrans now has a web site! To get to the web site, go to: http://www.dot.ca.gov

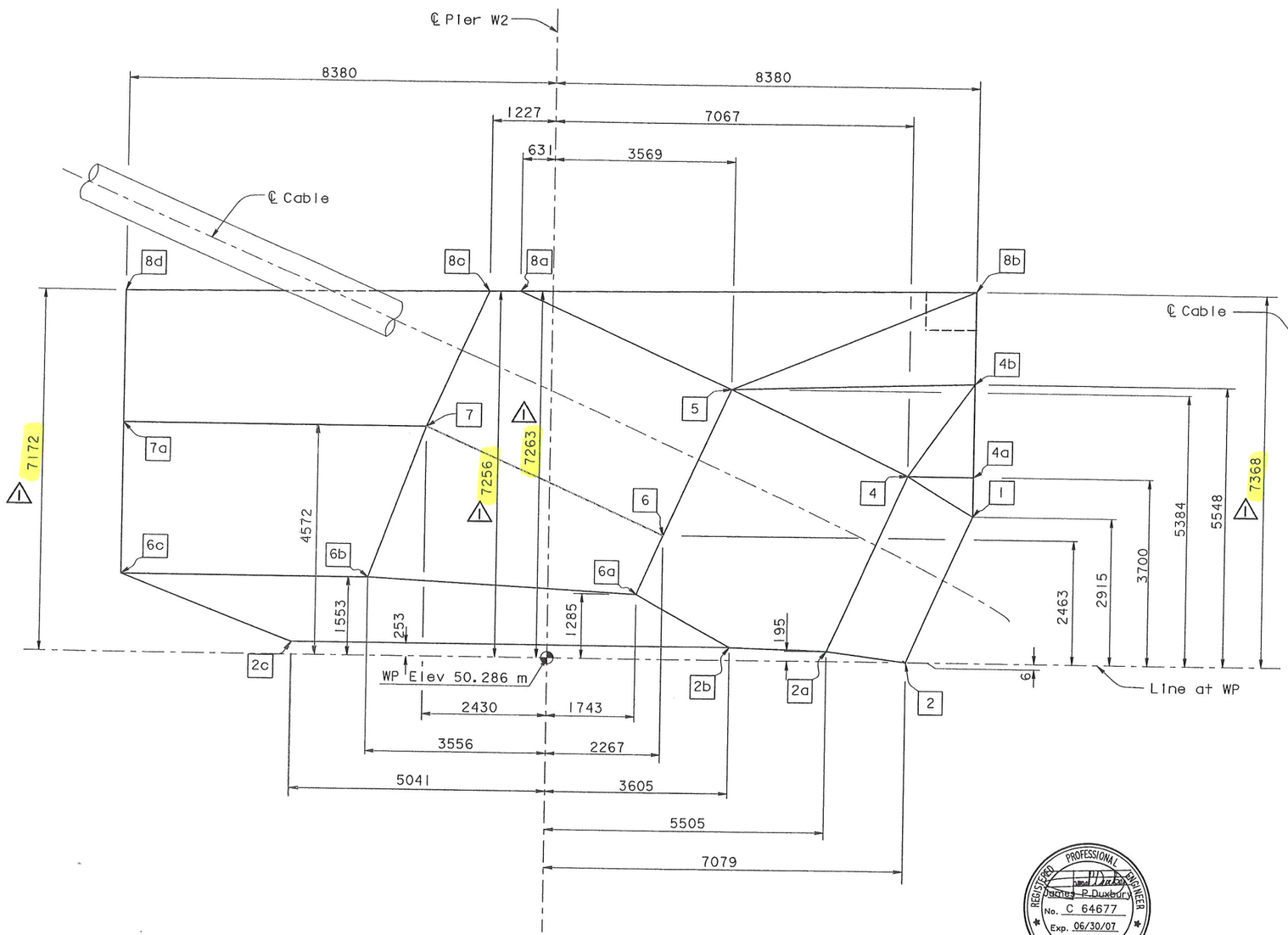

SECTION P-P
1:50

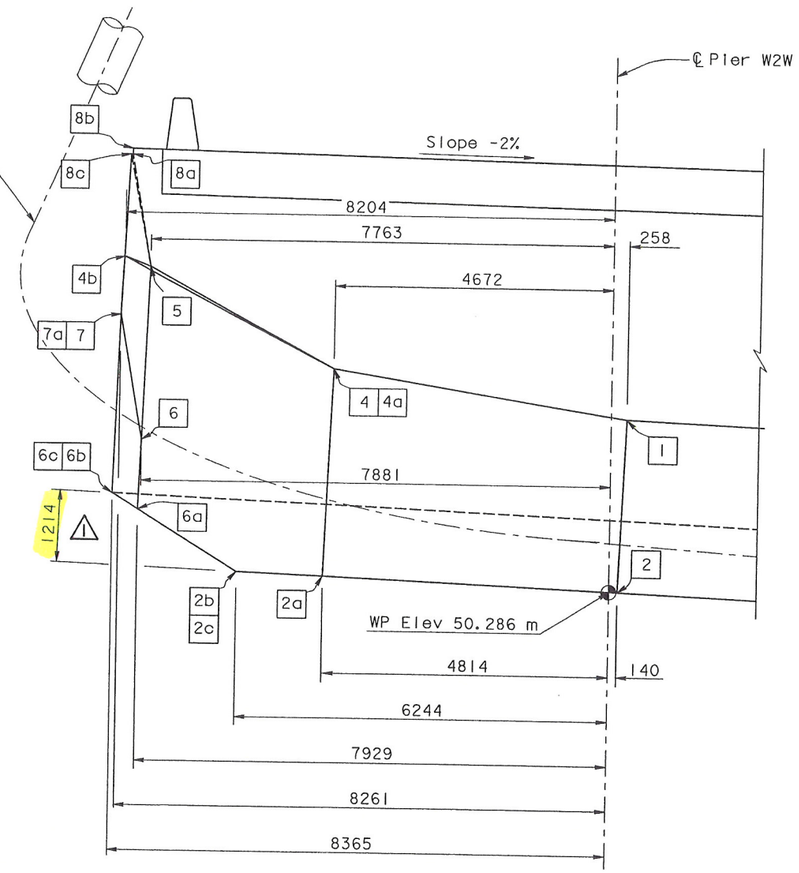

SECTION Q-Q
1:50

REGISTERED PROFESSIONAL ENGINEER James P. Duxbury No. C 64677 Exp. 06/30/07 CIVIL STATE OF CALIFORNIA

FOR REVISIONS ONLY

MARK	DATE	DESCRIPTIONS	BY	CH'D
1	07/21/06	W2 CAP BEAM ISD	JD	NV

REVISIONS

CONTRACT CHANGE ORDER NO. ____
SHEET ____ OF ____

LEGEND:

[-] Indicates Cap Beam Dimensions Control Point

ALL DIMENSIONS ARE IN MILLIMETERS UNLESS OTHERWISE SHOWN

R. Vallzadeh/V. Toan/Y. L./W. L./F. C.
DESIGN OVERSIGHT
SIGN OFF DATE 07/21/06
Rev. Date: 5-18-98

	BY	CHECKED
DESIGN	J. Sun	M. Chen
DETAILS	S. Shi	M. Chen
QUANTITIES	S. Shi	D. Harrison

PREPARED FOR THE STATE OF CALIFORNIA DEPARTMENT OF TRANSPORTATION

R. Manzanarez
PROJECT ENGINEER

BRIDGE NO. 34-0006L/R
KILOMETER POST 13.2/13.9

SAN FRANCISCO OAKLAND BAY BRIDGE
EAST SPAN SEISMIC SAFETY PROJECT
SELF-ANCHORED SUSPENSION BRIDGE
(SUPERSTRUCTURE & TOWER)

W2 CAP BEAM DIMENSION DETAILS NO. 8

ORIGINAL SCALE IN MILLIMETERS FOR REDUCED PLANS 0 10 20 30 40 50 60 70 80 90 100

CU 04
EA 0120F1

DISREGARD PRINTS BEARING EARLIER REVISION DATES

REVISION DATES (PRELIMINARY STAGE ONLY) 05/05/99 08/06/99 05/31/01 04/08/02 07/01/02 12/19/02

SHEET 044R1 OF

FILE => p:\bb\04-012001\sas readv august 2005\cco#23\aecap07.dgn

100 % PS&E

USERNAME => vignatovsk DATE PLOTTED => 14 JUL 2006 TIME PLOTTED => 09:40:25

Caltrans now has a web site! To get to the web site, go to: http://www.dot.ca.gov

MARK	DATE	DESCRIPTIONS	BY	CH'D
1	07/21/06	W2 CAP BEAM ISD	JD	NV

REVISIONS

CONTRACT CHANGE ORDER NO. ____
SHEET ____ OF ____

FOR REVISIONS ONLY

DIST.	COUNTY	ROUTE	KILOMETER POST TOTAL PROJECT	SHEET NO.	TOTAL SHEETS
04	SF	80	13.2/13.9	462R1	1204

REGISTERED ENGINEER - CIVIL

12-6-04
PLANS APPROVAL DATE

The State of California or its officers or agents shall not be responsible for the accuracy or completeness of electronic copies of this plan sheet.

REGISTERED PROFESSIONAL ENGINEER — John Sun, No. C 54648, Exp. 12/31/05, CIVIL, STATE OF CALIFORNIA

T.Y. LIN / MOFFATT & NICHOL
825 BATTERY STREET
SAN FRANCISCO, CA 94111

REGISTERED PROFESSIONAL ENGINEER — James P. Duxbury, No. C 64677, Exp. 06/30/07, CIVIL, STATE OF CALIFORNIA

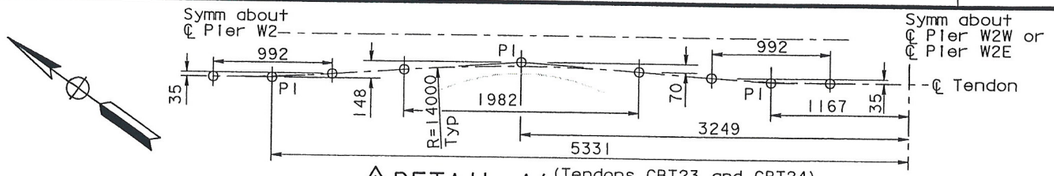

⚠1 DETAIL A′ (Tendons CBT23 and CBT24) (Tendons CBT30 and CBT31)
1:25

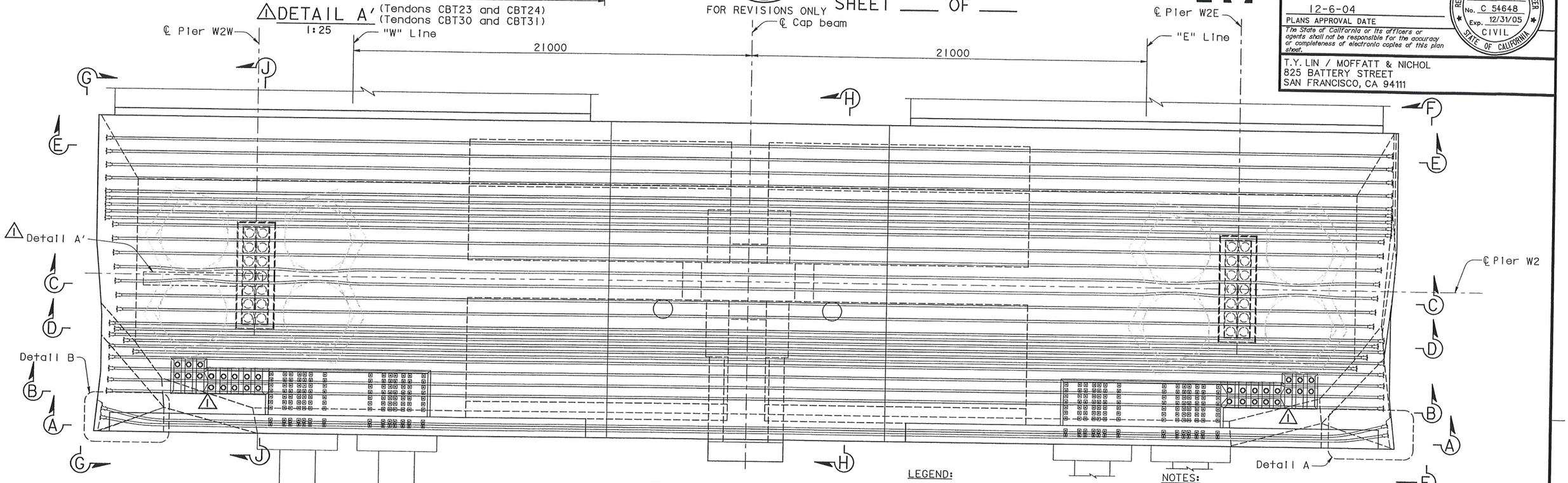

TENDON LAYOUT PLAN
1:100
(W2 Cap Beam Continuity PT Tendons not shown for clarity)

LEGEND:
CBT-Cap Beam Transverse Tendon

NOTES:

1. All W2 cap beam transverse tendons are ASTM A416 Grade 270 (fu=1860 MPa), low relaxation, 27-15 Dia seven wire strand PT, unless specified otherwise. For additional prestressing details, see "Prestressing Notes" sheet.
2. For Section A-A, see "W2 Cap Beam Post-Tensioning Details No.2" sheet.
3. For Sections B-B through E-E, see "W2 Cap Beam Post-Tensioning Details No.3" sheet.
4. For Sections F-F through J-J, see "W2 Cap Beam Post-Tensioning Details No.4" sheet.
5. For bikepath details near cap beam, see "Bikepath Details" sheets.
6. For PT blockout dimensions, see "W2 Cap Beam Blockout Details" sheets.
7. Jacking force in the W2 cap beam transverse tendons (CBT1-CBT36) shall be 5265 kN typical.
8. For general stressing sequence, see "Pier W2 Construction Sequence" sheet.
9. For "W2 Cap Beam Post-Tensioning Details" sheets, the Contractor shall verify all controlling field dimensions before ordering or fabricating any material.
10. W2 cap beam elevations are to top of finished concrete and do not include overlay thickness.

ALL DIMENSIONS ARE IN MILLIMETERS UNLESS OTHERWISE SHOWN

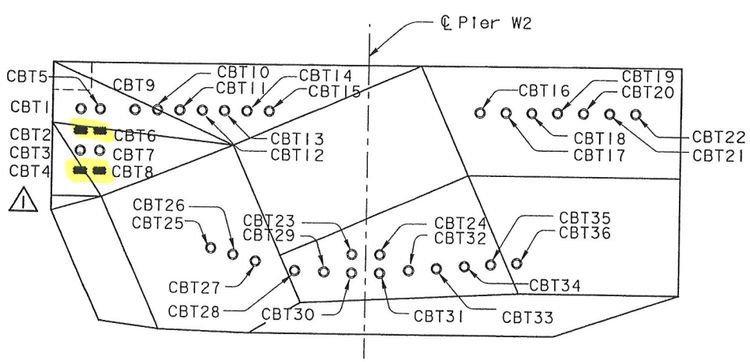

TENDON DESIGNATION
1:80

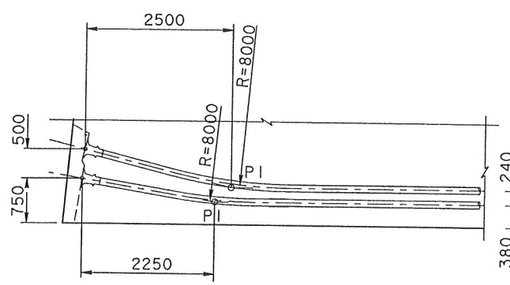

DETAIL B
1:50
(Tendons CBT1 and CBT5)
⚠1 (Tendons CBT2 thru CBT8 similar)

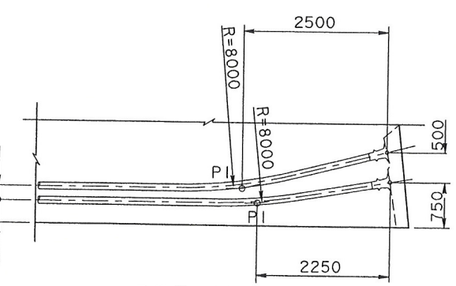

DETAIL A
1:50
(Tendons CBT1 and CBT5)
⚠1 (Tendons CBT2 thru CBT8 similar)

R. Vallzadeh/V. Toan/Y.L./W.L./F.C.
DESIGN OVERSIGHT
SIGN OFF DATE 07/21/06
Rev. Date: 5-18-98

	BY	CHECKED
DESIGN	J. Sun	M. Chen
DETAILS	J. Duxbury	M. Chen
QUANTITIES	S. Shi	D. Harrison

PREPARED FOR THE STATE OF CALIFORNIA DEPARTMENT OF TRANSPORTATION

R. Manzanarez
PROJECT ENGINEER

BRIDGE NO. 34-0006L/R
KILOMETER POST 13.2/13.9

SAN FRANCISCO OAKLAND BAY BRIDGE
EAST SPAN SEISMIC SAFETY PROJECT
SELF-ANCHORED SUSPENSION BRIDGE
(SUPERSTRUCTURE & TOWER)

W2 CAP BEAM POST-TENSIONING DETAILS NO. 1

ORIGINAL SCALE IN MILLIMETERS FOR REDUCED PLANS 0 10 20 30 40 50 60 70 80 90 100

CU 04
EA 0120F1

DISREGARD PRINTS BEARING EARLIER REVISION DATES

REVISION DATES (PRELIMINARY STAGE ONLY): 08/08/99 05/24/01 04/08/02 07/24/02 12/19/02

SHEET 045R1 OF

FILE => p:\bb\04-012001\sas readv august 2005\cco#23\aecpt01.dgn

100 % PS&E

USERNAME => vignatovs DATE PLOTTED => 14 JUL 2006 TIME PLOTTED => 09:41:38

DIST.	COUNTY	ROUTE	KILOMETER POST TOTAL PROJECT	SHEET NO.	TOTAL SHEETS
04	SF	80	13.2/13.9	463R1	1204

REGISTERED ENGINEER - CIVIL

12-6-04
PLANS APPROVAL DATE

REGISTERED PROFESSIONAL ENGINEER John Sun No. C 54648 Exp. 12/31/05 CIVIL STATE OF CALIFORNIA

The State of California or its officers or agents shall not be responsible for the accuracy or completeness of electronic copies of this plan sheet.

T.Y. LIN / MOFFATT & NICHOL
825 BATTERY STREET
SAN FRANCISCO, CA 94111

Caltrans now has a web site! To get to the web site, go to: http://www.dot.ca.gov

Caltrans Metric

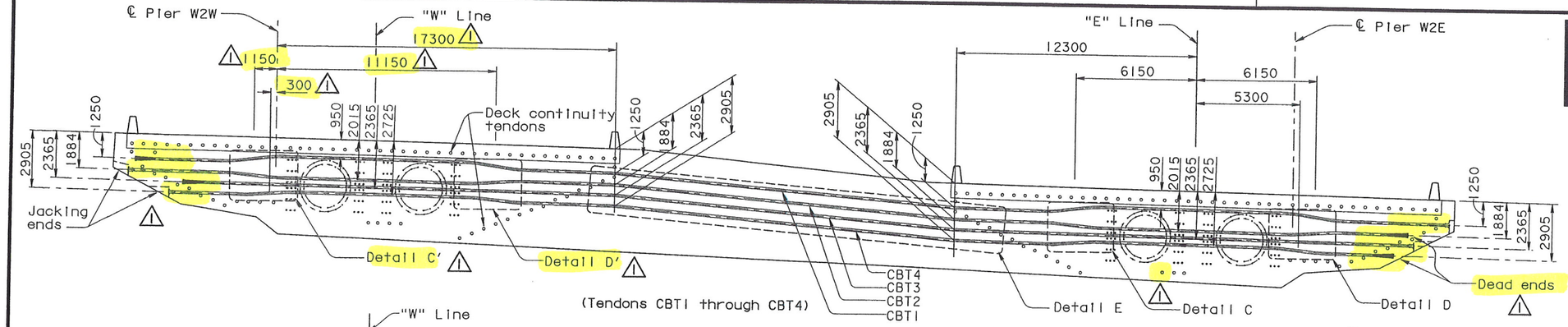

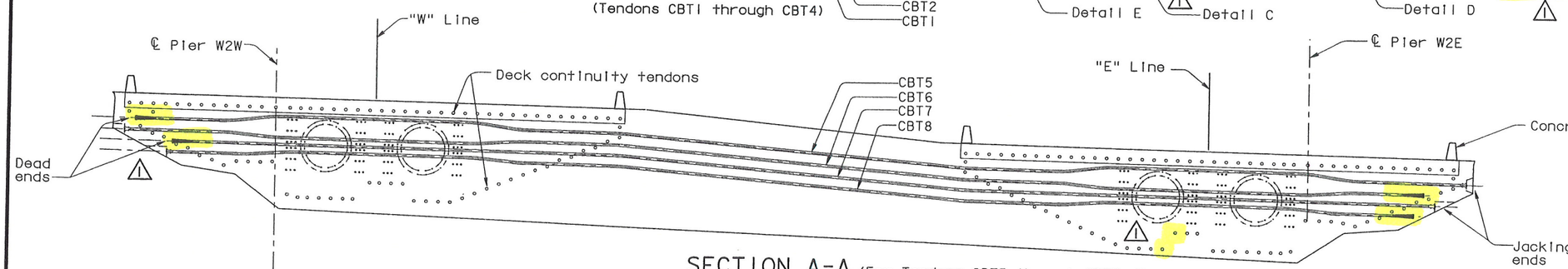

SECTION A-A
1:125

(For Tendons CBT5 through CBT8 dimensions, see Tendon CBT1 through CBT4 dimensions)

REGISTERED PROFESSIONAL ENGINEER Yichen P. Duxbury No. C 64677 Exp. 06/30/07 CIVIL STATE OF CALIFORNIA

FOR REVISIONS ONLY

MARK	DATE	DESCRIPTIONS	BY	CH'D
1	07/21/06	W2 CAP BEAM ISD	JD	NV

REVISIONS

CONTRACT CHANGE ORDER NO. _____
SHEET ___ OF ___

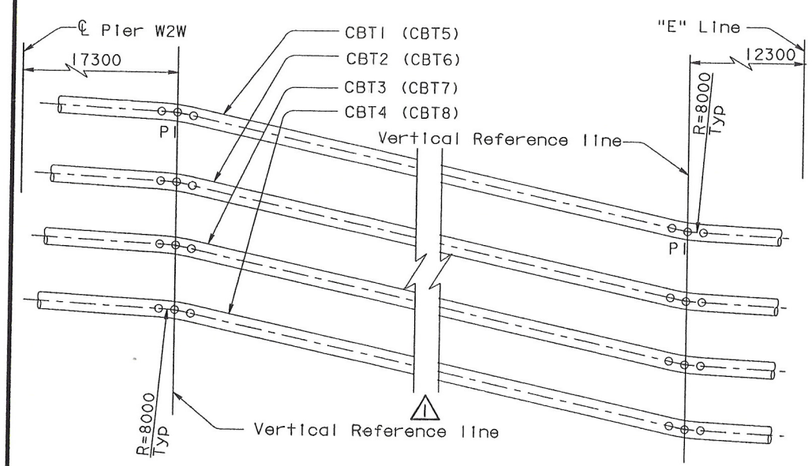

DETAIL E
NTS

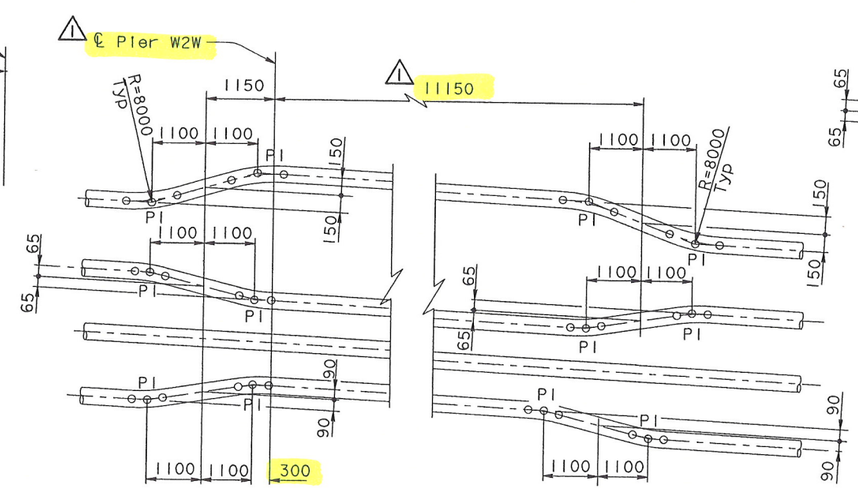

DETAIL C'
NTS

DETAIL D'
NTS

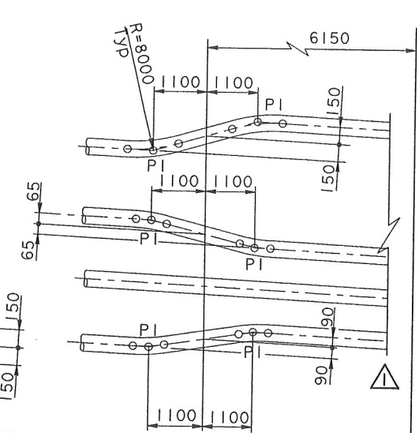

DETAIL C
NTS

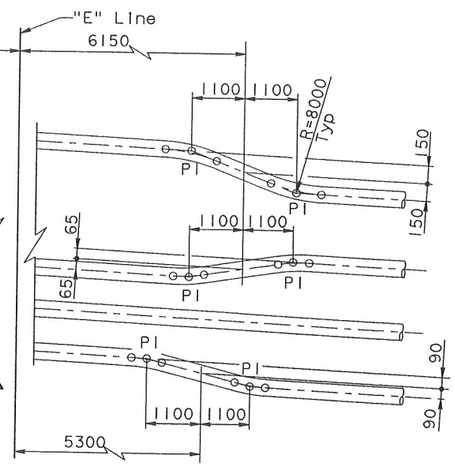

DETAIL D
NTS

NOTES:

1. For additional details, see "W2 Cap Beam Post-Tensioning Details No.1" sheet.
2. For PT blockout details, see "W2 Cap Beam Blockout Details" sheets.
3. For deck continuity tendon details, see "W2 Cap Beam Post-Tensioning Details No.5" through "W2 Cap Beam Post-Tensioning Details No.12" sheets.

100% PS&E

USERNAME => vigmatovsk DATE PLOTTED => 14 JUL 2006 TIME PLOTTED => 09:42:27

R. Valizadeh/V. Toan/Y. L./W. L./F. C.
DESIGN OVERSIGHT
Roger Valizadeh / Vong Toan / Y. Lui
SIGN OFF DATE 07/21/06
Rev. Date: 5-18-98

	BY	CHECKED
DESIGN	J. Sun	M. Chen
DETAILS	J. Duxbury	M. Chen
QUANTITIES	S. Shi	D. Harrison

ORIGINAL SCALE IN MILLIMETERS FOR REDUCED PLANS 0 10 20 30 40 50 60 70 80 90 100

PREPARED FOR THE STATE OF CALIFORNIA DEPARTMENT OF TRANSPORTATION

ALL DIMENSIONS ARE IN MILLIMETERS UNLESS OTHERWISE SHOWN

R. Manzanarez
PROJECT ENGINEER

CU 04
EA 0120F1

BRIDGE NO. 34-0006L/R
KILOMETER POST 13.2/13.9

DISREGARD PRINTS BEARING EARLIER REVISION DATES → 08/07/99 05/31/01 04/08/02 01/04/02 12/19/02

SAN FRANCISCO OAKLAND BAY BRIDGE
EAST SPAN SEISMIC SAFETY PROJECT
SELF-ANCHORED SUSPENSION BRIDGE
(SUPERSTRUCTURE & TOWER)

W2 CAP BEAM POST-TENSIONING DETAILS NO.2

SHEET 046R1 OF

FILE => p:\bb\04-012001\sas readv august 2005\cco#23\aecpt02.dgn

DIST.	COUNTY	ROUTE	KILOMETER POST TOTAL PROJECT	SHEET NO.	TOTAL SHEETS
04	SF	80	13.2/13.9	464R1	1204

REGISTERED ENGINEER - CIVIL

12-6-04
PLANS APPROVAL DATE

REGISTERED PROFESSIONAL ENGINEER — John Sun, No. C 54648, Exp. 12/31/05, CIVIL, STATE OF CALIFORNIA

The State of California or its officers or agents shall not be responsible for the accuracy or completeness of electronic copies of this plan sheet.

T.Y. LIN / MOFFATT & NICHOL
825 BATTERY STREET
SAN FRANCISCO, CA 94111

Caltrans now has a web site! To get to the web site, go to: http://www.dot.ca.gov

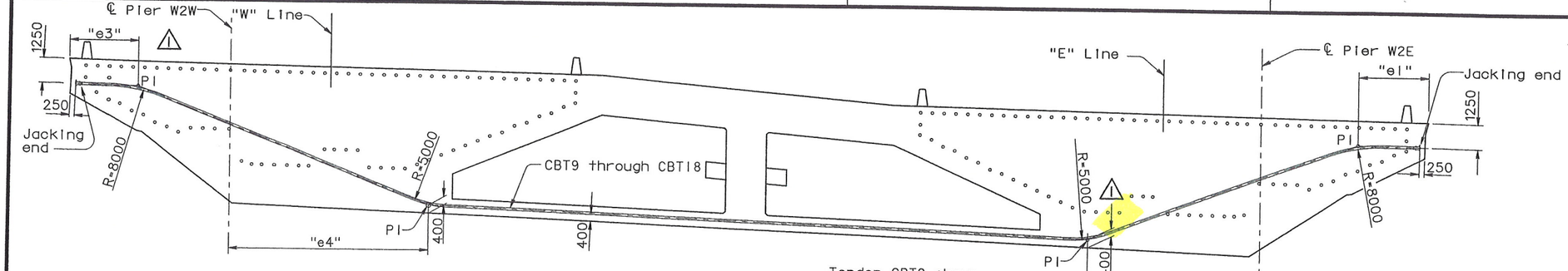

SECTION B-B
1:125

Tendon CBT9 shown for CBT10 through CBT18 see Table

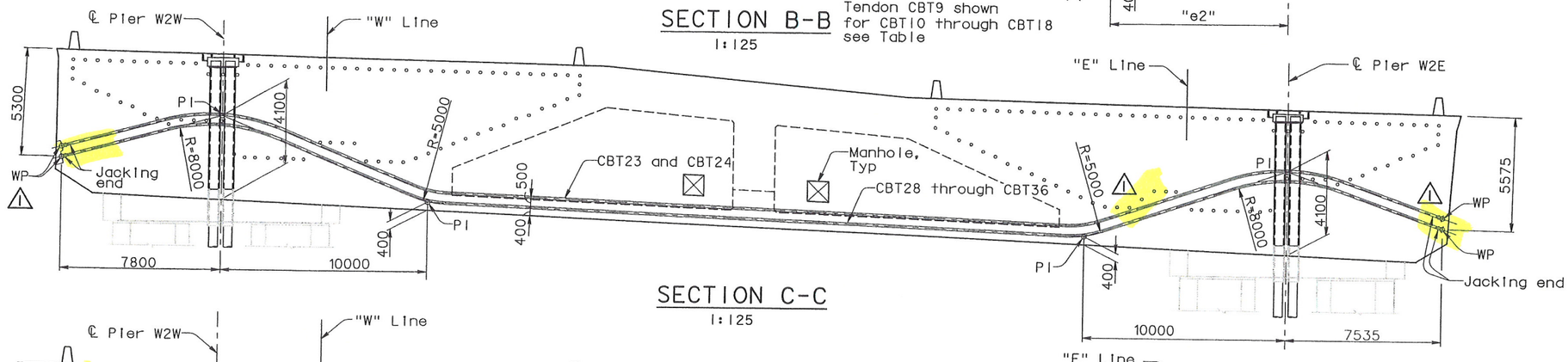

SECTION C-C
1:125

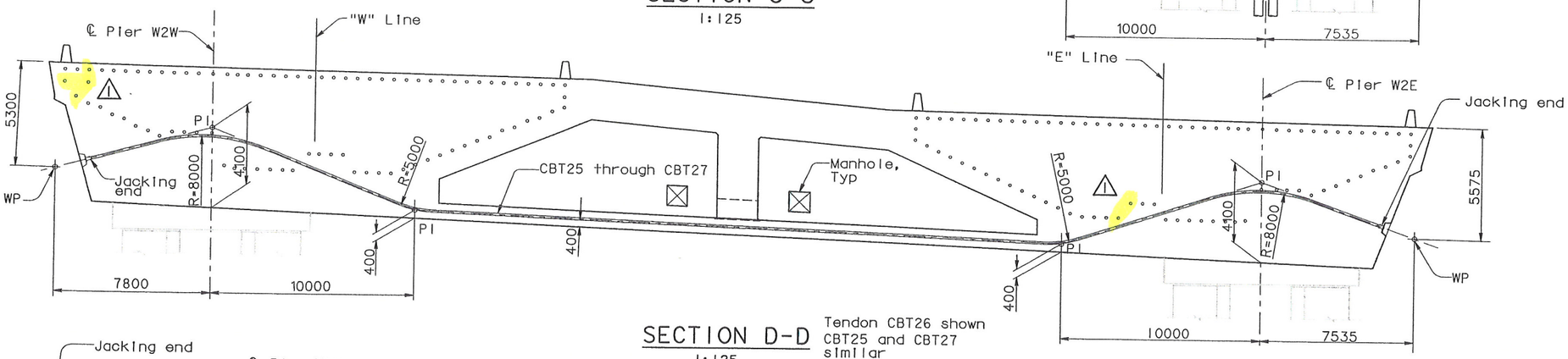

SECTION D-D
1:125

Tendon CBT26 shown CBT25 and CBT27 similar

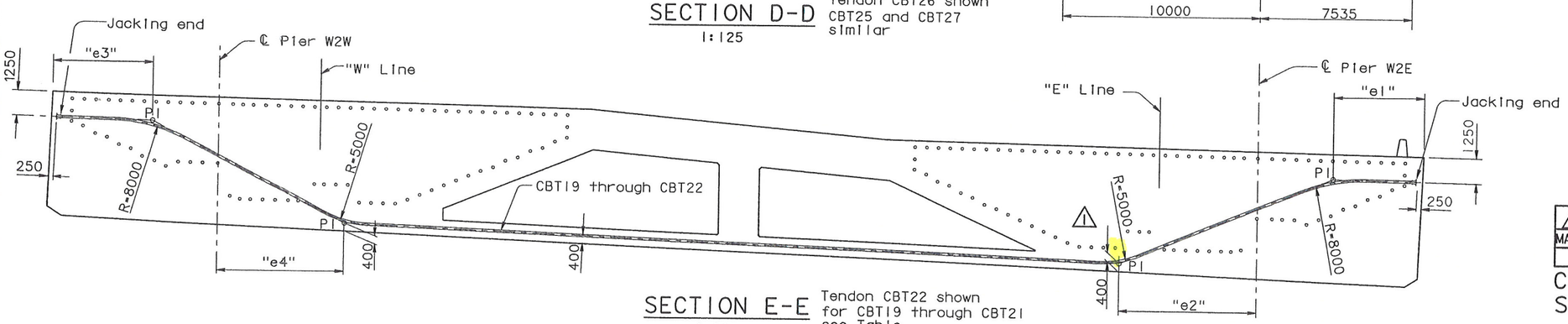

SECTION E-E
1:125

Tendon CBT22 shown for CBT19 through CBT21 see Table

CBT	e1	e2	e3	e4
9-12	3500	9250	3500	10000
13-18	3500	10000	3500	10000
19	3500	10000	3500	10000
20	3500	9000	3500	8750
21	3500	8000	3600	7500
22	4500	7000	5000	6250

NOTES:

1. For additional details, see "W2 Cap Beam Post-Tensioning Details No.1" sheet.
2. For PT blockout details, see "W2 Cap Beam Blockout Details" sheets.

REGISTERED PROFESSIONAL ENGINEER — James P. Duxbury, No. C 64677, Exp. 06/30/07, CIVIL, STATE OF CALIFORNIA

FOR REVISIONS ONLY

MARK	DATE	DESCRIPTIONS	BY	CH'D
1	07/21/06	W2 CAP BEAM ISD	JD	NV

REVISIONS

CONTRACT CHANGE ORDER NO. _____
SHEET ____ OF ____

100% PS&E

ALL DIMENSIONS ARE IN MILLIMETERS UNLESS OTHERWISE SHOWN

R. Vallzadeh/V. Toan/Y. L./W. L./F. C.
DESIGN OVERSIGHT
SIGN OFF DATE 07/21/06
Rev. Date: 5-18-98

DESIGN	BY J. Sun	CHECKED M. Chen	
DETAILS	BY J. Duxbury	CHECKED M. Chen	
QUANTITIES	BY S. Shl	CHECKED D. Harrison	

PREPARED FOR THE STATE OF CALIFORNIA DEPARTMENT OF TRANSPORTATION

R. Manzanarez
PROJECT ENGINEER

BRIDGE NO. 34-0006L/R
KILOMETER POST 13.2/13.9

SAN FRANCISCO OAKLAND BAY BRIDGE
EAST SPAN SEISMIC SAFETY PROJECT
SELF-ANCHORED SUSPENSION BRIDGE
(SUPERSTRUCTURE & TOWER)

W2 CAP BEAM POST-TENSIONING DETAILS NO.3

ORIGINAL SCALE IN MILLIMETERS FOR REDUCED PLANS 0 10 20 30 40 50 60 70 80 90 100

CU 04
EA 0120F1

DISREGARD PRINTS BEARING EARLIER REVISION DATES

REVISION DATES (PRELIMINARY STAGE ONLY): 05/31/01 01/08/02 07/01/02 12/19/02

SHEET 047R1 OF

FILE => p:\bb\04-012001\sas ready august 2005\coo#23\aecpt03.dgn

USERNAME => vignatovsk DATE PLOTTED => 14 JUL 2006 TIME PLOTTED => 09:43:22

DIST.	COUNTY	ROUTE	KILOMETER POST TOTAL PROJECT	SHEET NO.	TOTAL SHEETS
04	SF	80	13.2/13.9	465R1	1204

Caltrans Metric

REGISTERED ENGINEER - CIVIL

12-6-04
PLANS APPROVAL DATE

REGISTERED PROFESSIONAL ENGINEER John Sun No. C 54648 Exp. 12/31/05 CIVIL STATE OF CALIFORNIA

The State of California or its officers or agents shall not be responsible for the accuracy or completeness of electronic copies of this plan sheet.

T.Y. LIN / MOFFATT & NICHOL
825 BATTERY STREET
SAN FRANCISCO, CA 94111

Caltrans now has a web site! To get to the web site, go to: http://www.dot.ca.gov/

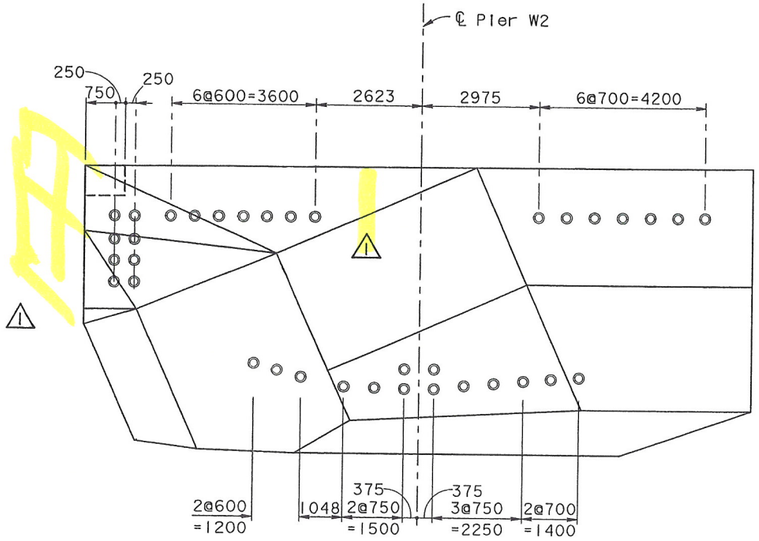

SECTION F-F
1:75

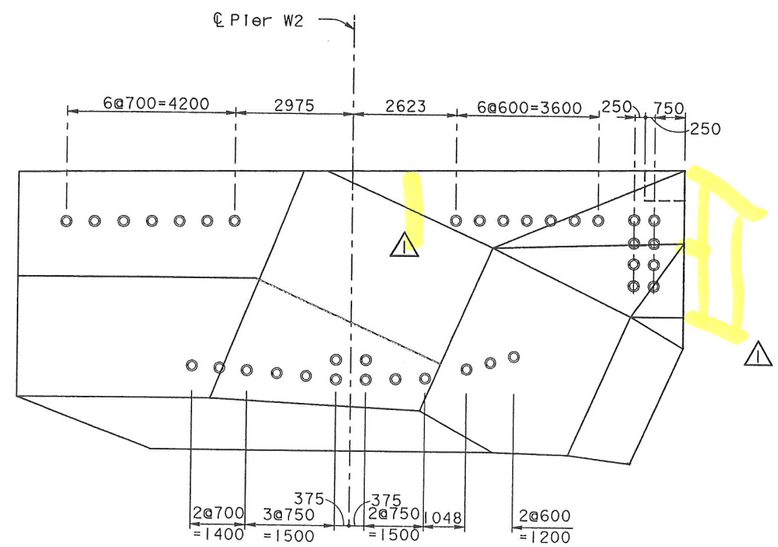

SECTION G-G
1:75

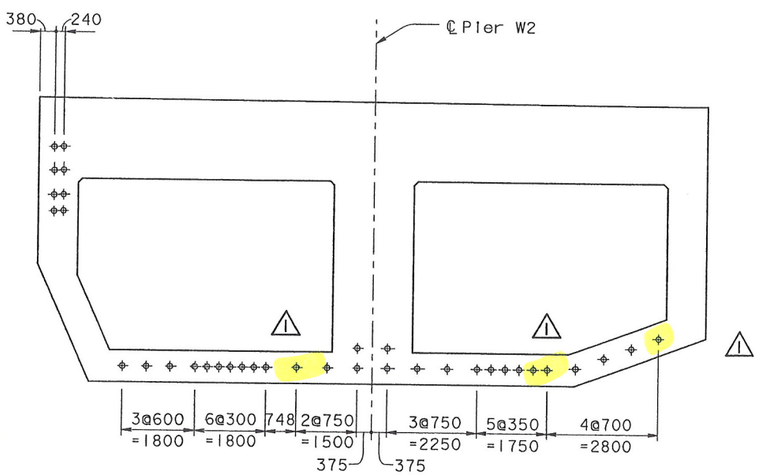

SECTION H-H
1:75

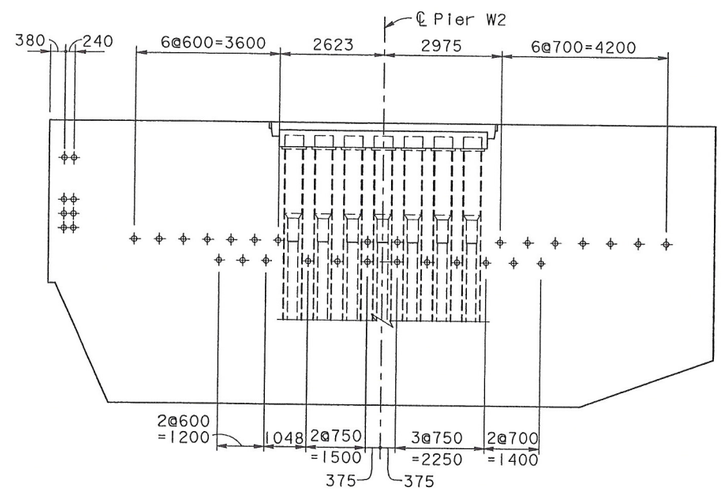

SECTION J-J
1:75

NOTES:

1. For additional details, see "W2 Cap Beam Post-Tensioning Details No.1" sheet.
2. For PT blockout details, see "W2 Cap Beam Blockout Details" sheets.

REGISTERED PROFESSIONAL ENGINEER Jaime P. Duxbury No. C 64677 Exp. 06/30/07 CIVIL STATE OF CALIFORNIA

FOR REVISIONS ONLY

MARK	DATE	DESCRIPTIONS	BY	CH'D
1	07/21/06	W2 CAP BEAM ISD	JD	NV

REVISIONS

CONTRACT CHANGE ORDER NO. _____
SHEET ____ OF ____

100 % PS&E

ALL DIMENSIONS ARE IN MILLIMETERS UNLESS OTHERWISE SHOWN

R. Valizadeh/V. Toan/Y.L./W.L./F.C.
DESIGN OVERSIGHT
SIGN OFF DATE 07/21/06
Rev. Date: 5-18-98

	BY	CHECKED	
DESIGN	J. Sun	M. Chen	
DETAILS	J. Duxbury	M. Chen	
QUANTITIES	S. Shi	D. Harrison	

PREPARED FOR THE STATE OF CALIFORNIA DEPARTMENT OF TRANSPORTATION

R. Manzanarez
PROJECT ENGINEER

BRIDGE NO. 34-0006L/R
KILOMETER POST 13.2/13.9

SAN FRANCISCO OAKLAND BAY BRIDGE
EAST SPAN SEISMIC SAFETY PROJECT
SELF-ANCHORED SUSPENSION BRIDGE
(SUPERSTRUCTURE & TOWER)

W2 CAP BEAM POST-TENSIONING DETAILS NO.4

ORIGINAL SCALE IN MILLIMETERS FOR REDUCED PLANS 0 10 20 30 40 50 60 70 80 90 100

CU 04
EA 0120F1

DISREGARD PRINTS BEARING EARLIER REVISION DATES

REVISION DATES (PRELIMINARY STAGE ONLY): 08/07/99 05/24/01 04/08/02 07/24/02 12/19/02

SHEET 048R1 OF

FILE => p:\bb\04-012001\sas readv august 2005\oco#23\aeopt04.dgn

USERNAME => v\gnatovski DATE PLOTTED => 14 JUL 2006 TIME PLOTTED => 09:44:48

DIST.	COUNTY	ROUTE	KILOMETER POST TOTAL PROJECT	SHEET NO.	TOTAL SHEETS
04	SF	80	13.2/13.9	466R1	1204

REGISTERED ENGINEER - CIVIL

12-6-04
PLANS APPROVAL DATE

REGISTERED PROFESSIONAL ENGINEER John Sun No. C 54648 Exp. 12/31/05 CIVIL STATE OF CALIFORNIA

The State of California or its officers or agents shall not be responsible for the accuracy or completeness of electronic copies of this plan sheet.

T.Y. LIN / MOFFATT & NICHOL
825 BATTERY STREET
SAN FRANCISCO, CA 94111

Caltrans now has a web site! To get to the web site, go to: http://www.dot.ca.gov

Caltrans Metric

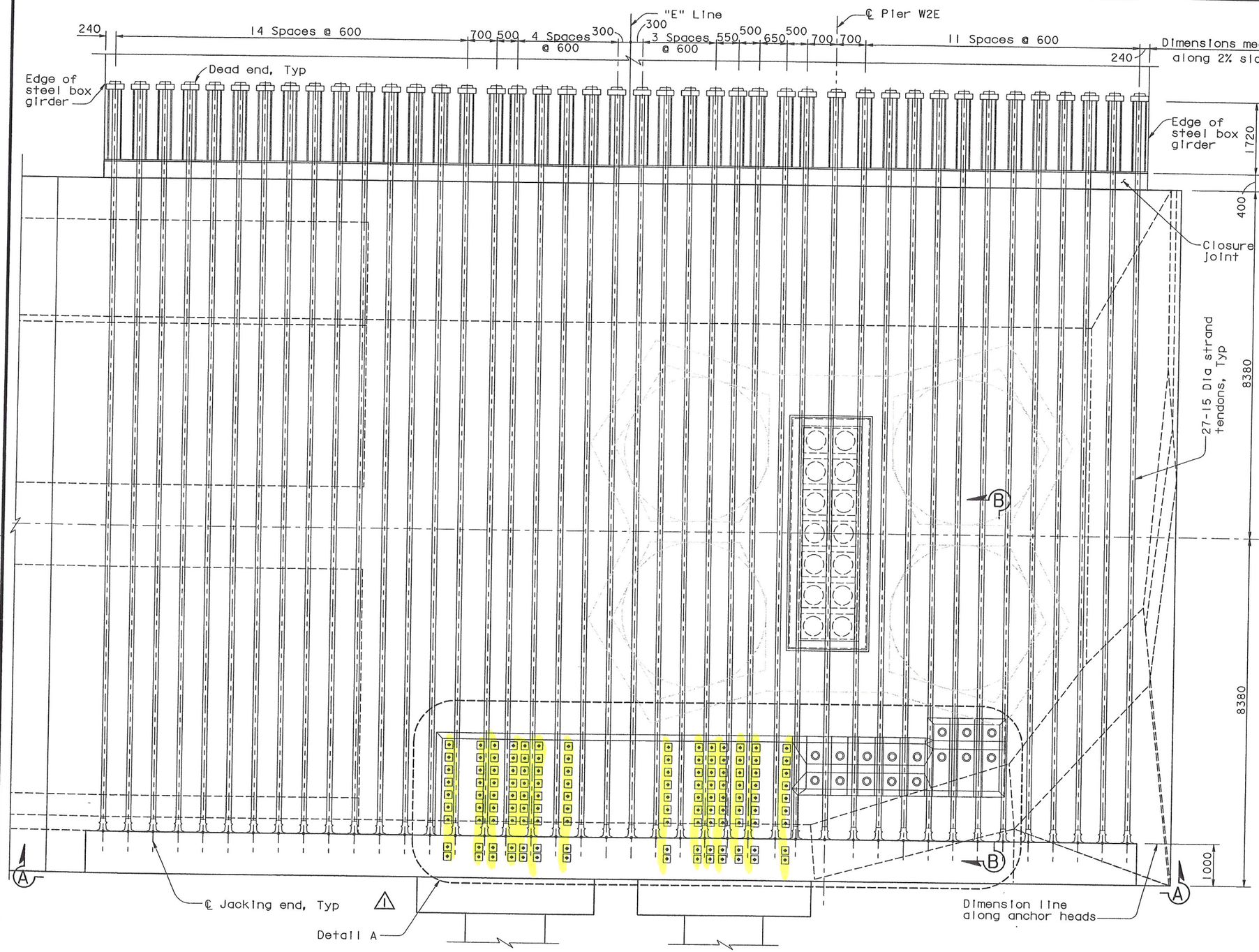

TOP TENDON LAYOUT PLAN ("E" Line)
1:50

REGISTERED PROFESSIONAL ENGINEER James P. Duxbury No. C 64677 Exp. 06/30/07 CIVIL STATE OF CALIFORNIA

FOR REVISIONS ONLY

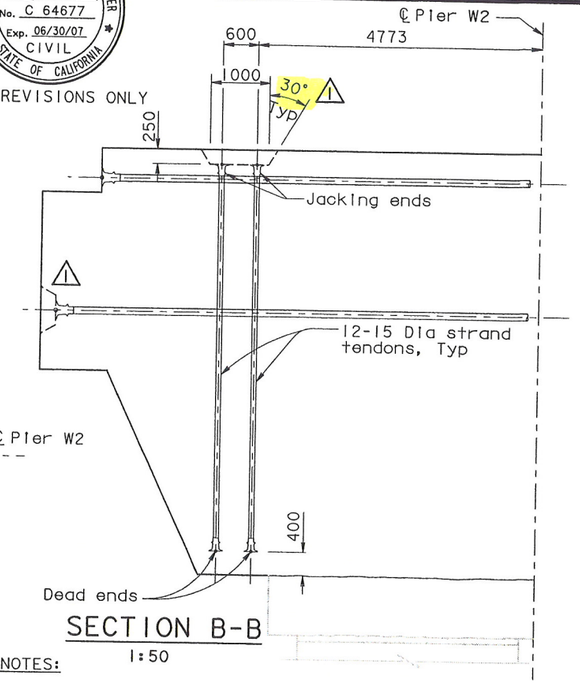

SECTION B-B
1:50

NOTES:

1. For Section A-A, see "W2 Cap Beam Post-Tensioning Details No.9" sheet.
2. For Detail A, see "W2 Cap Beam Post-Tensioning Details No.10" sheet.
3. All W2 cap beam continuity tendons are ASTM A416 Grade 270 (fu=1860 MPa), low relaxation, 27-15 Dia seven wire strand PT, unless specified otherwise. For additional prestressing details, see "Prestressing Notes" sheet.
4. For blockout details, see "W2 Cap Beam Blockout Details" sheets.
5. For dead end anchor bearing steel grillage, see "Girder At Pier W2 No.4" sheet.

MARK	DATE	DESCRIPTIONS	BY	CH'D
1	07/21/06	W2 CAP BEAM ISD	JD	NV

REVISIONS

CONTRACT CHANGE ORDER NO. ____
SHEET ____ OF ____

100 % PS&E

ALL DIMENSIONS ARE IN MILLIMETERS UNLESS OTHERWISE SHOWN

R. Vallzadeh/V. Toan/Y.L./W.L./F.C.
DESIGN OVERSIGHT
SIGN OFF DATE 07/21/06
Rev. Date: 5-18-98

	BY	CHECKED
DESIGN	J. Sun	M. Chen
DETAILS	J. Duxbury	M. Chen
QUANTITIES	S. Shi	D. Harrison

PREPARED FOR THE STATE OF CALIFORNIA DEPARTMENT OF TRANSPORTATION

R. Manzanarez
PROJECT ENGINEER

BRIDGE NO. 34-0006L/R
KILOMETER POST 13.2/13.9

SAN FRANCISCO OAKLAND BAY BRIDGE
EAST SPAN SEISMIC SAFETY PROJECT
SELF-ANCHORED SUSPENSION BRIDGE
(SUPERSTRUCTURE & TOWER)

W2 CAP BEAM POST-TENSIONING DETAILS NO.5

ORIGINAL SCALE IN MILLIMETERS FOR REDUCED PLANS 0 10 20 30 40 50 60 70 80 90 100

CU 04
EA 0120F1

DISREGARD PRINTS BEARING EARLIER REVISION DATES

REVISION DATES (PRELIMINARY STAGE ONLY) 08/08/99 05/24/01 04/08/02 07/09/02 12/19/02

SHEET 049R1 OF

FILE => p:\bb\04-012001\sas ready august 2005\cco#23\aecpt05.dgn

USERNAME => vtignotovs DATE PLOTTED => 14 JUL 2006 TIME PLOTTED => 09:45:47

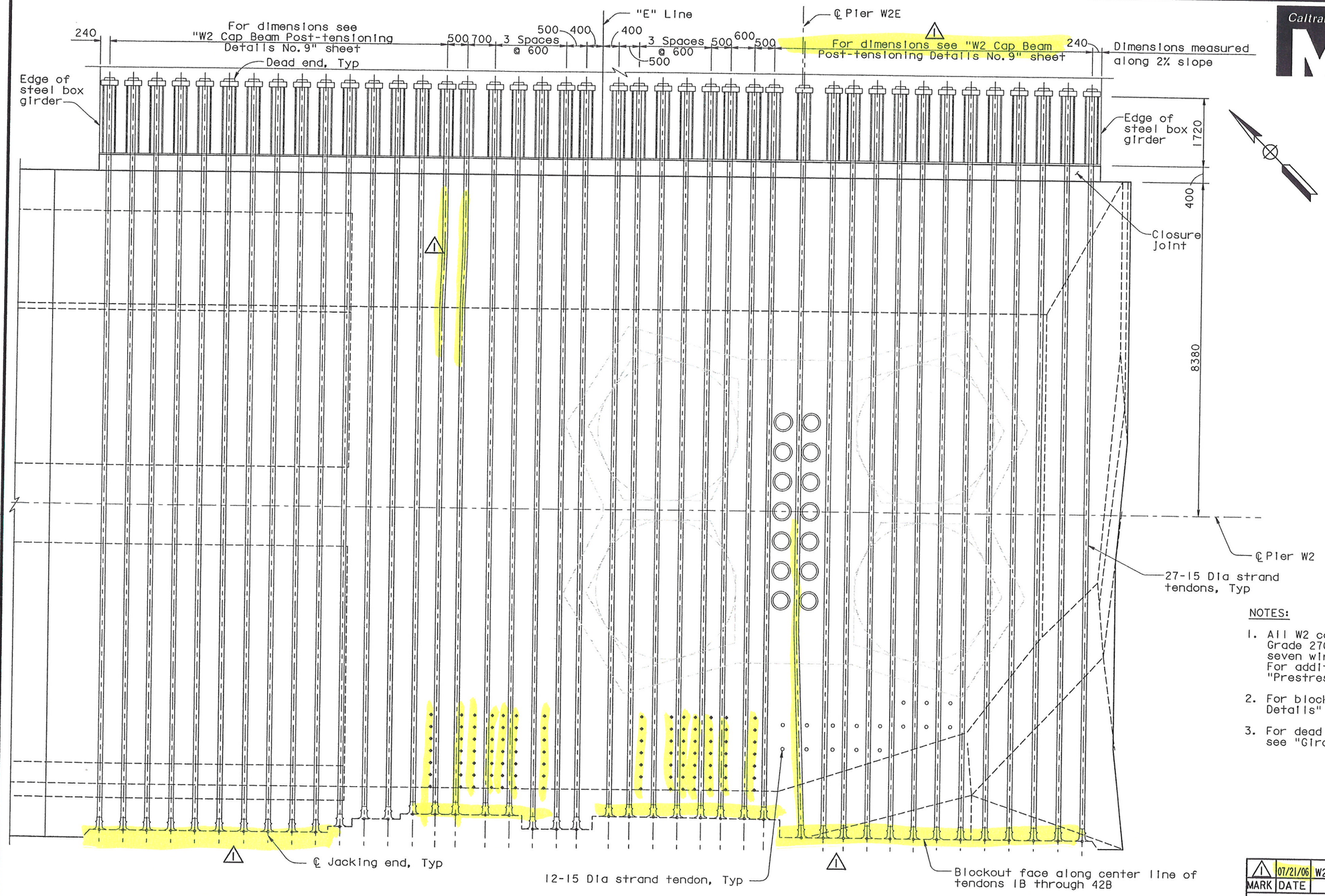

BOTTOM TENDON LAYOUT PLAN

1:50 ("E Line")

NOTES:

1. All W2 cap beam continuity tendons are ASTM A416 Grade 270 (fu=1860 MPa), low relaxation, 27-15 Dia seven wire strand PT, unless specified otherwise. For additional prestressing details, see "Prestressing Notes" sheet.
2. For blockout details, see "W2 Cap Beam Blockout Details" sheets.
3. For dead end anchor bearing steel grillage, see "Girder At Pier W2 No.4" sheet.

DIST.	COUNTY	ROUTE	KILOMETER POST TOTAL PROJECT	SHEET NO.	TOTAL SHEETS
04	SF	80	13.2/13.9	467R1	1204

REGISTERED ENGINEER - CIVIL

12-6-04
PLANS APPROVAL DATE

REGISTERED PROFESSIONAL ENGINEER John Sun No. C 54648 Exp. 12/31/05 CIVIL STATE OF CALIFORNIA

The State of California or its officers or agents shall not be responsible for the accuracy or completeness of electronic copies of this plan sheet.

T.Y. LIN / MOFFATT & NICHOL
825 BATTERY STREET
SAN FRANCISCO, CA 94111

Caltrans now has a web site! To get to the web site, go to: http://www.dot.ca.gov

REGISTERED PROFESSIONAL ENGINEER James P. Duxbury No. C 64677 Exp. 06/30/07 CIVIL STATE OF CALIFORNIA

FOR REVISIONS ONLY

MARK	DATE	DESCRIPTIONS	BY	CH'D
1	07/21/06	W2 CAP BEAM ISD	JD	NV

REVISIONS

CONTRACT CHANGE ORDER NO. _____
SHEET ____ OF ____

100 % PS&E

ALL DIMENSIONS ARE IN MILLIMETERS UNLESS OTHERWISE SHOWN

R. Vallzadeh/V. Toan/Y.L./W.L./F.C.
DESIGN OVERSIGHT
SIGN OFF DATE 07/21/06
Rev. Date: 5-18-98

	BY	CHECKED
DESIGN	J. Sun	M. Chen
DETAILS	J. Duxbury	M. Chen
QUANTITIES	S. Shi	D. Harrison

PREPARED FOR THE STATE OF CALIFORNIA DEPARTMENT OF TRANSPORTATION

R. Manzanarez
PROJECT ENGINEER

BRIDGE NO. 34-0006L/R
KILOMETER POST 13.2/13.9

SAN FRANCISCO OAKLAND BAY BRIDGE
EAST SPAN SEISMIC SAFETY PROJECT
SELF-ANCHORED SUSPENSION BRIDGE
(SUPERSTRUCTURE & TOWER)

W2 CAP BEAM POST-TENSIONING DETAILS NO.6

ORIGINAL SCALE IN MILLIMETERS FOR REDUCED PLANS 0 10 20 30 40 50 60 70 80 90 100

CU 04
EA 0120F1

DISREGARD PRINTS BEARING EARLIER REVISION DATES

REVISION DATES (PRELIMINARY STAGE ONLY) 08/08/99 05/24/01 04/08/02 07/24/02 12/19/02

SHEET 050R1 OF

FILE => p:\bb\04-012001\sas ready august 2005\cco#23\aecpt06.dgn

USERNAME => vignatovsky DATE PLOTTED => 14 JUL 2006 TIME PLOTTED => 09:46:35

DIST.	COUNTY	ROUTE	KILOMETER POST TOTAL PROJECT	SHEET NO.	TOTAL SHEETS
04	SF	80	13.2/13.9	468R1	1204

REGISTERED ENGINEER - CIVIL

12-6-04
PLANS APPROVAL DATE

REGISTERED PROFESSIONAL ENGINEER John Sun No. C 54648 Exp. 12/31/05 CIVIL STATE OF CALIFORNIA

The State of California or its officers or agents shall not be responsible for the accuracy or completeness of electronic copies of this plan sheet.

T.Y. LIN / MOFFATT & NICHOL
825 BATTERY STREET
SAN FRANCISCO, CA 94111

Caltrans now has a web site! To get to the web site, go to: http://www.dot.ca.gov

Caltrans Metric

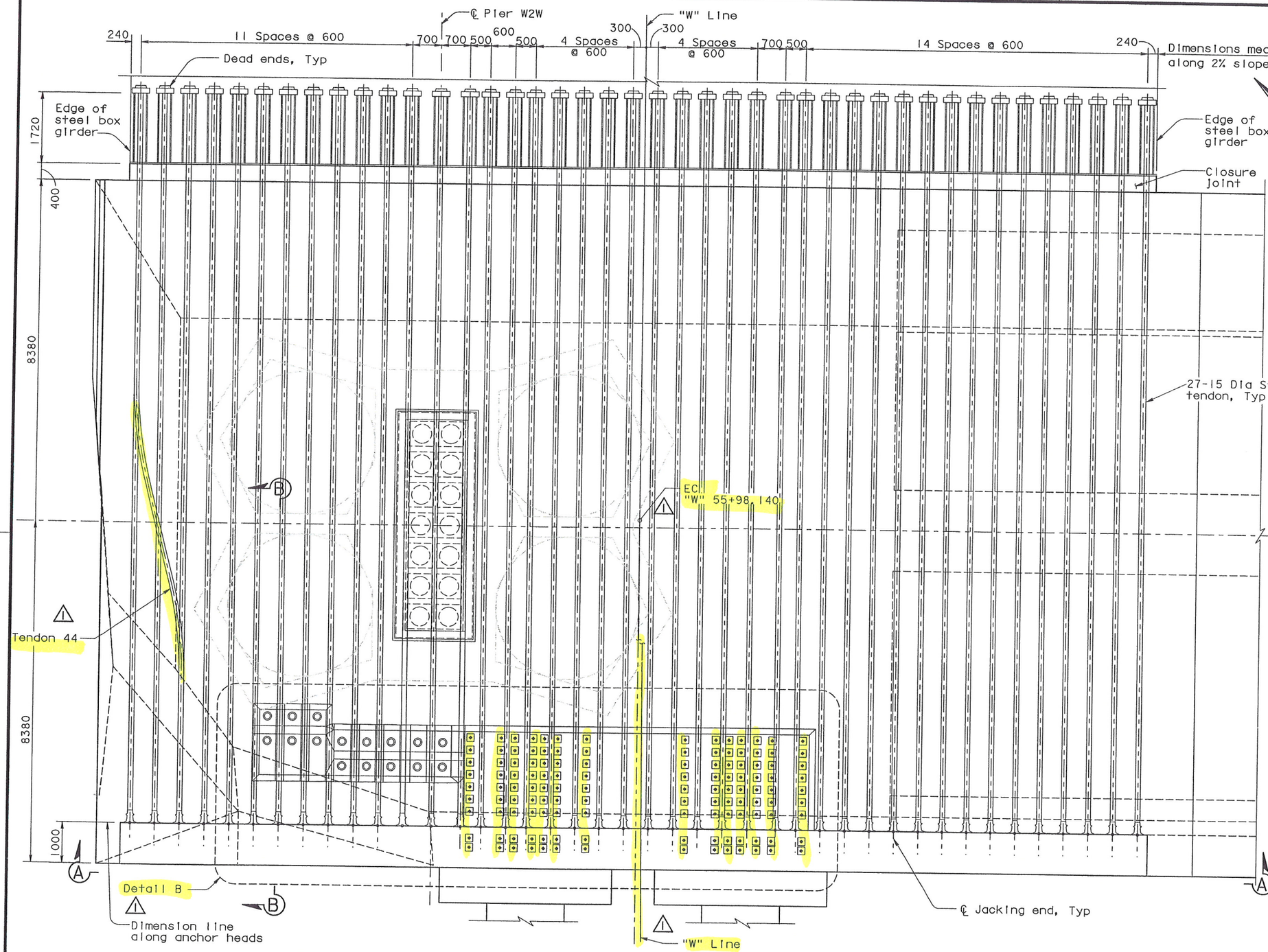

TOP TENDON LAYOUT PLAN ("W" Line)
1:50

FOR REVISIONS ONLY

REGISTERED PROFESSIONAL ENGINEER James P. Duxbury No. C 64677 Exp. 06/30/07 CIVIL STATE OF CALIFORNIA

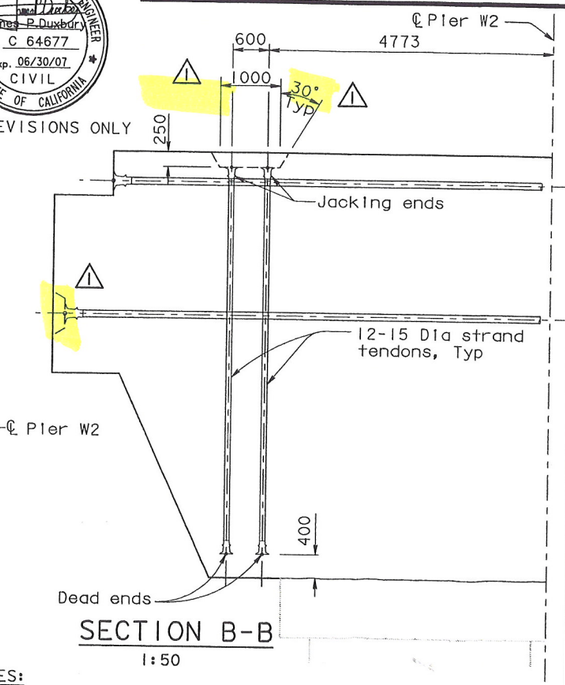

SECTION B-B
1:50

NOTES:

1. For Section A-A, see "W2 Cap Beam Post-Tensioning Details No.9" sheet.
2. For Detail B, see "W2 Cap Beam Post-Tensioning Details No.10" sheet.
3. All W2 cap beam continuity tendons are ASTM A416 Grade 270 (fu=1860 MPa), low relaxation, 27-15 Dia seven wire strand PT, unless specified otherwise. For additional prestressing details, see "Prestressing Notes" sheet.
4. For blockout details, see "W2 Cap Beam Blockout Details" sheets.
5. For dead end anchor bearing steel grillage, see "Girder At Pier W2 No.4" sheet.

MARK	DATE	DESCRIPTIONS	BY	CH'D
1	07/21/06	W2 CAP BEAM ISD	JD	NV

REVISIONS

CONTRACT CHANGE ORDER NO. _____
SHEET ___ OF ___

ALL DIMENSIONS ARE IN MILLIMETERS UNLESS OTHERWISE SHOWN

R. Valizadeh/V. Toan/Y.L./W.L./F.C.
DESIGN OVERSIGHT
SIGN OFF DATE 07/21/06
Rev. Date: 5-18-98

	BY	CHECKED
DESIGN	J. Sun	M. Chen
DETAILS	J. Duxbury	M. Chen
QUANTITIES	S. Shi	D. Harrison

PREPARED FOR THE STATE OF CALIFORNIA DEPARTMENT OF TRANSPORTATION

R. Manzanarez
PROJECT ENGINEER

BRIDGE NO. 34-0006L/R
KILOMETER POST 13.2/13.9

CU 04
EA 0120F1

SAN FRANCISCO OAKLAND BAY BRIDGE
EAST SPAN SEISMIC SAFETY PROJECT
SELF-ANCHORED SUSPENSION BRIDGE
(SUPERSTRUCTURE & TOWER)

W2 CAP BEAM POST-TENSIONING DETAILS NO.7

ORIGINAL SCALE IN MILLIMETERS FOR REDUCED PLANS 0 10 20 30 40 50 60 70 80 90 100

DISREGARD PRINTS BEARING EARLIER REVISION DATES

REVISION DATES (PRELIMINARY STAGE ONLY): 09/28/99 05/24/01 09/28/02 01/28/02 12/19/02

SHEET 051R1 OF

FILE => p:\bb\04-012001\sas readv august 2005\cco#23\aecpt07.dgn

USERNAME => vignatovsk DATE PLOTTED => 14 JUL 2006 TIME PLOTTED => 09:47:30

100% PS&E

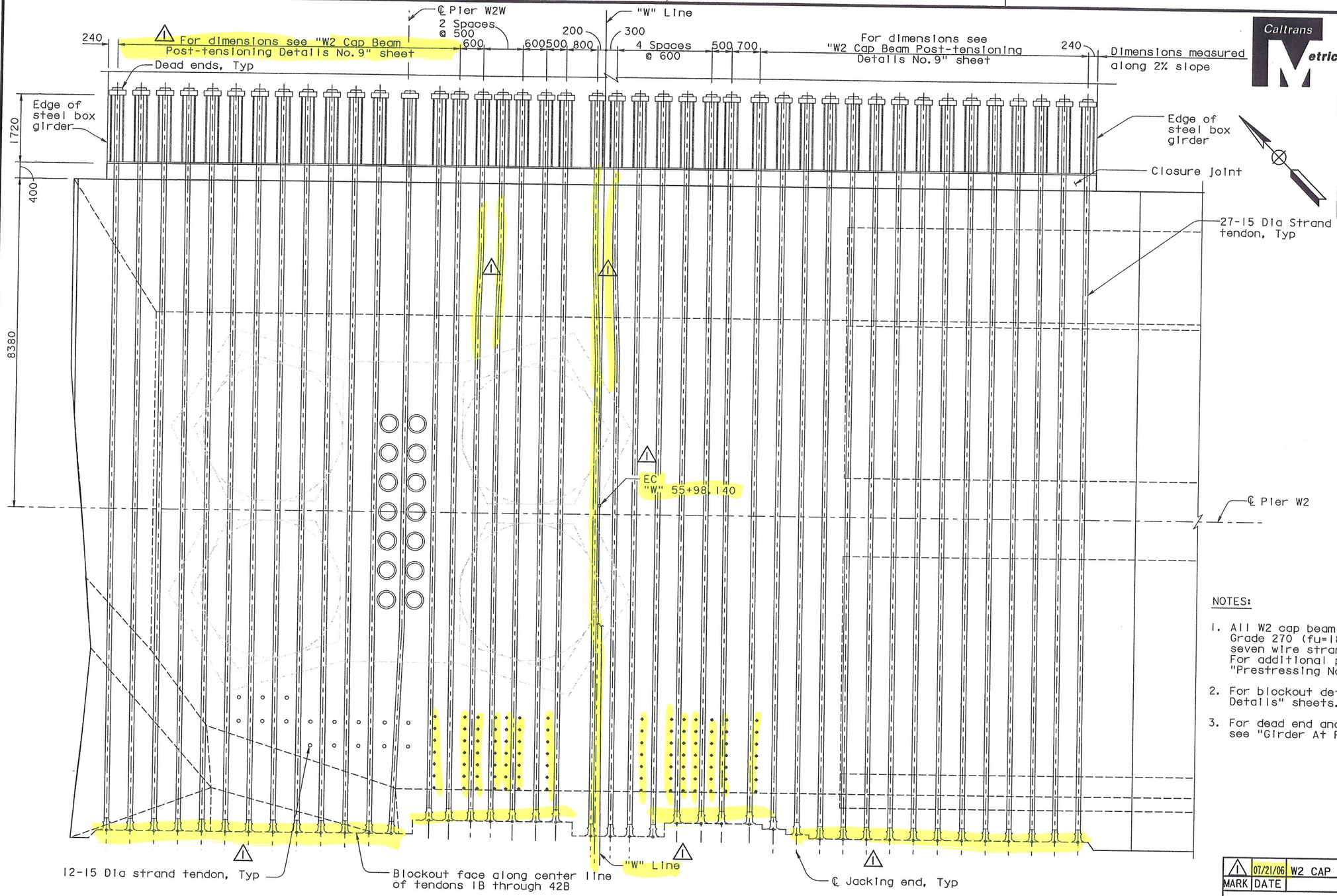

NOTES:

1. All W2 cap beam continuity tendons are ASTM A416 Grade 270 (fu=1860 MPa), low relaxation, 27-15 Dia seven wire strand PT, unless specified otherwise. For additional prestressing details, see "Prestressing Notes" sheet.
2. For blockout details, see "W2 Cap Beam Blockout Details" sheets.
3. For dead end anchor bearing steel grillage, see "Girder At Pier W2 No.4" sheet.

BOTTOM TENDON LAYOUT PLAN ("W" Line)

1:50

ALL DIMENSIONS ARE IN MILLIMETERS UNLESS OTHERWISE SHOWN

DIST.	COUNTY	ROUTE	KILOMETER POST TOTAL PROJECT	SHEET NO.	TOTAL SHEETS
04	SF	80	13.2/13.9	469R1	1204

Caltrans Metric

REGISTERED ENGINEER - CIVIL

12-6-04
PLANS APPROVAL DATE

REGISTERED PROFESSIONAL ENGINEER John Sun No. C 54648 Exp. 12/31/05 CIVIL STATE OF CALIFORNIA

The State of California or its officers or agents shall not be responsible for the accuracy or completeness of electronic copies of this plan sheet.

T.Y. LIN / MOFFATT & NICHOL
825 BATTERY STREET
SAN FRANCISCO, CA 94111

Caltrans now has a web site! To get to the web site, go to: http://www.dot.ca.gov

REGISTERED PROFESSIONAL ENGINEER James P. Duxbury No. C 64677 Exp. 06/30/07 CIVIL STATE OF CALIFORNIA

FOR REVISIONS ONLY

MARK	DATE	DESCRIPTIONS	BY	CH'D
1	07/21/06	W2 CAP BEAM ISD	JD	NV

REVISIONS

CONTRACT CHANGE ORDER NO. _____
SHEET ____ OF ____

100% PS&E

R. Vallizadeh/V. Toan/Y.L./W.L./F.C.
DESIGN OVERSIGHT
SIGN OFF DATE 07/21/06
Rev. Date: 5-18-98

	BY	CHECKED
DESIGN	J. Sun	M. Chen
DETAILS	J. Duxbury	M. Chen
QUANTITIES	S. Shi	D. Harrison

PREPARED FOR THE STATE OF CALIFORNIA DEPARTMENT OF TRANSPORTATION

R. Manzanarez
PROJECT ENGINEER

BRIDGE NO. 34-0006L/R
KILOMETER POST 13.2/13.9

SAN FRANCISCO OAKLAND BAY BRIDGE
EAST SPAN SEISMIC SAFETY PROJECT
SELF-ANCHORED SUSPENSION BRIDGE
(SUPERSTRUCTURE & TOWER)

W2 CAP BEAM POST-TENSIONING DETAILS NO.8

ORIGINAL SCALE IN MILLIMETERS FOR REDUCED PLANS 0 10 20 30 40 50 60 70 80 90 100

CU 04
EA 0120F1

DISREGARD PRINTS BEARING EARLIER REVISION DATES

REVISION DATES (PRELIMINARY STAGE ONLY) 08/08/99 05/24/01 04/08/02 07/09/02 12/19/02

SHEET 052R1 OF

FILE => p:\bb\04-012001\sas readv august 2005\coo*23\aecpt08.dgn

USERNAME => vignatovski DATE PLOTTED => 14 JUL 2006 TIME PLOTTED => 09:48:17

DIST.	COUNTY	ROUTE	KILOMETER POST TOTAL PROJECT	SHEET NO.	TOTAL SHEETS
04	SF	80	13.2/13.9	470R1	1204

REGISTERED ENGINEER - CIVIL

12-6-04
PLANS APPROVAL DATE

REGISTERED PROFESSIONAL ENGINEER John Sun No. C 54648 Exp. 12/31/05 CIVIL STATE OF CALIFORNIA

The State of California or its officers or agents shall not be responsible for the accuracy or completeness of electronic copies of this plan sheet.

T.Y. LIN / MOFFATT & NICHOL
825 BATTERY STREET
SAN FRANCISCO, CA 94111

Caltrans now has a web site! To get to the web site, go to: http://www.dot.ca.gov

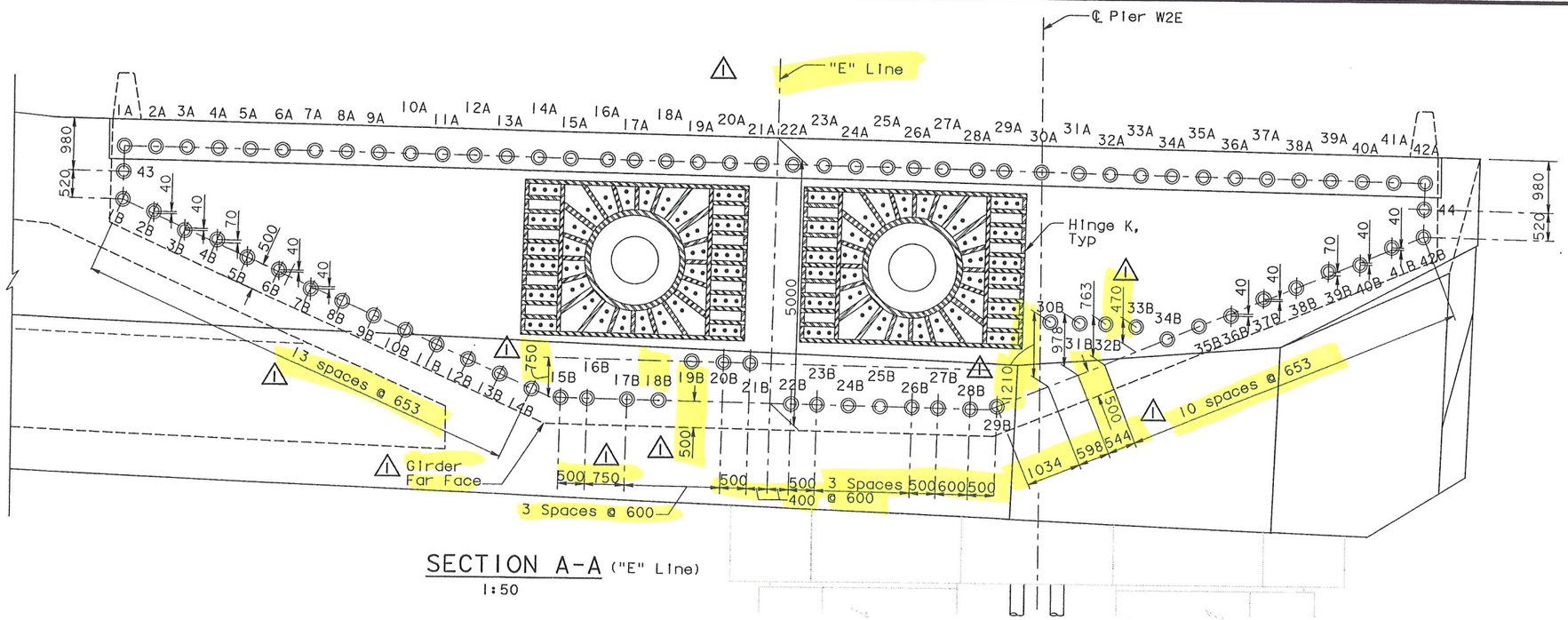

SECTION A-A ("E" Line)
1:50

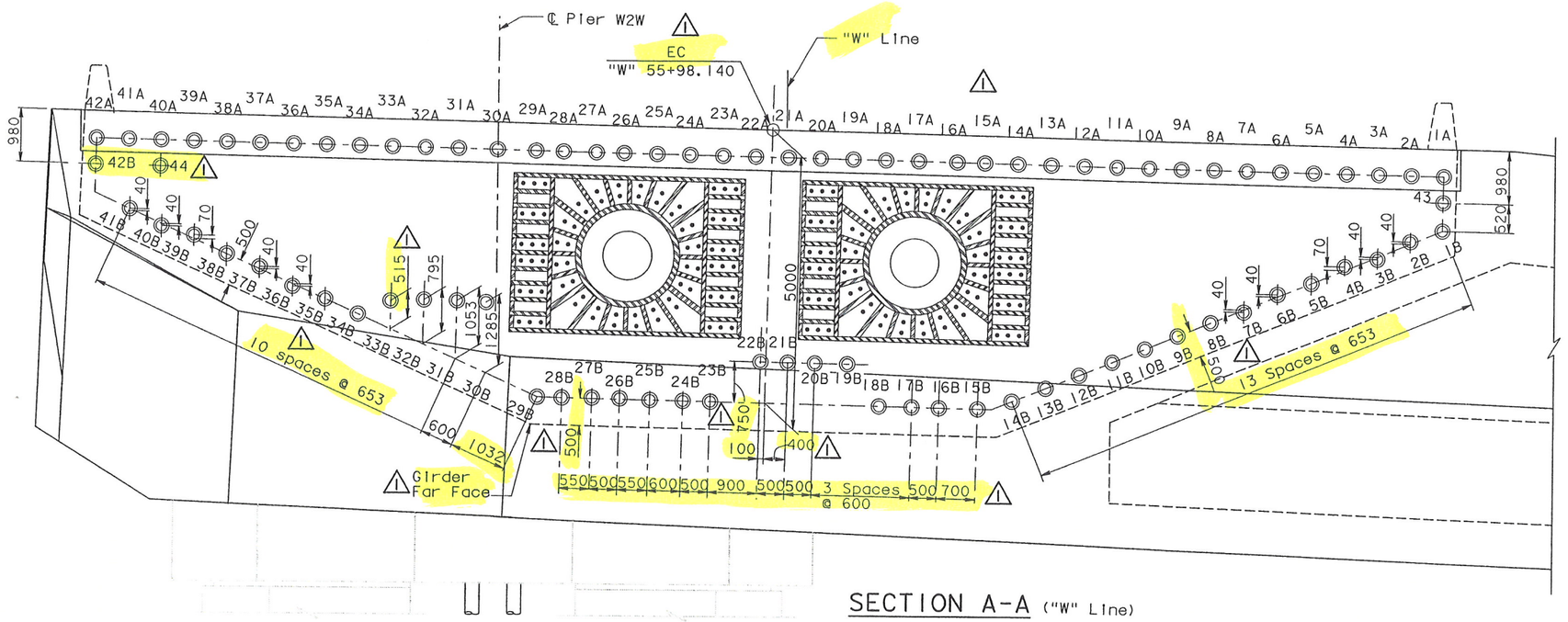

SECTION A-A ("W" Line)
1:50

NOTES:

1. For additional details, see "W2 Cap Beam Post-Tensioning Details No.5" and "W2 Cap Beam Post-Tensioning Details No.7" sheets.
2. Jacking force in the W2 cap beam continuity tendons (1A-42A, 1B-42B, 43 & 44) shall be 5265 kN typical.

REGISTERED PROFESSIONAL ENGINEER Jason P. Duxbury No. C 64677 Exp. 06/30/07 CIVIL STATE OF CALIFORNIA

FOR REVISIONS ONLY

MARK	DATE	DESCRIPTIONS	BY	CH'D
1	07/21/06	W2 CAP BEAM ISD	JD	NV

REVISIONS

CONTRACT CHANGE ORDER NO. _____
SHEET ____ OF ____

100 % PS&E

ALL DIMENSIONS ARE IN MILLIMETERS UNLESS OTHERWISE SHOWN

R. Vallzadeh/V. Toan/Y.L./W.L./F.C.
DESIGN OVERSIGHT
SIGN OFF DATE 07/21/06

	BY	CHECKED
DESIGN	J. Sun	M. Chen
DETAILS	J. Duxbury	M. Chen
QUANTITIES	S. Shi	D. Harrison

PREPARED FOR THE STATE OF CALIFORNIA DEPARTMENT OF TRANSPORTATION

R. Manzanarez
PROJECT ENGINEER

BRIDGE NO. 34-0006L/R
KILOMETER POST 13.2/13.9

SAN FRANCISCO OAKLAND BAY BRIDGE
EAST SPAN SEISMIC SAFETY PROJECT
SELF-ANCHORED SUSPENSION BRIDGE
(SUPERSTRUCTURE & TOWER)

W2 CAP BEAM POST-TENSIONING DETAILS NO.9

Rev. Date: 5-18-98

ORIGINAL SCALE IN MILLIMETERS FOR REDUCED PLANS 0 10 20 30 40 50 60 70 80 90 100

CU 04
EA 0120F1

DISREGARD PRINTS BEARING EARLIER REVISION DATES

REVISION DATES (PRELIMINARY STAGE ONLY) 08/08/99 05/31/01 04/08/02 07/08/02 12/19/02

SHEET 053R1 OF

FILE => p:\bb\04-012001\sas ready august 2005\cco#23\aecpt09.dgn

USERNAME => vignatovs DATE PLOTTED => 14 JUL 2006 TIME PLOTTED => 09:49:11

To get to the web site, go to: http://www.dot.ca.gov

MARK	DATE	DESCRIPTIONS	BY	CH'D
1	07/21/06	W2 CAP BEAM ISD	JD	NV

REVISIONS

CONTRACT CHANGE ORDER NO. ____
SHEET ___ OF ___

Caltrans Metric

DIST.	COUNTY	ROUTE	KILOMETER POST TOTAL PROJECT	SHEET NO.	TOTAL SHEETS
04	SF	80	13.2/13.9	471R1	1204

REGISTERED ENGINEER - CIVIL

12-6-04
PLANS APPROVAL DATE

REGISTERED PROFESSIONAL ENGINEER John Sun No. C 54648 Exp. 12/31/05 CIVIL STATE OF CALIFORNIA

The State of California or its officers or agents shall not be responsible for the accuracy or completeness of electronic copies of this plan sheet.

T.Y. LIN / MOFFATT & NICHOL
825 BATTERY STREET
SAN FRANCISCO, CA 94111

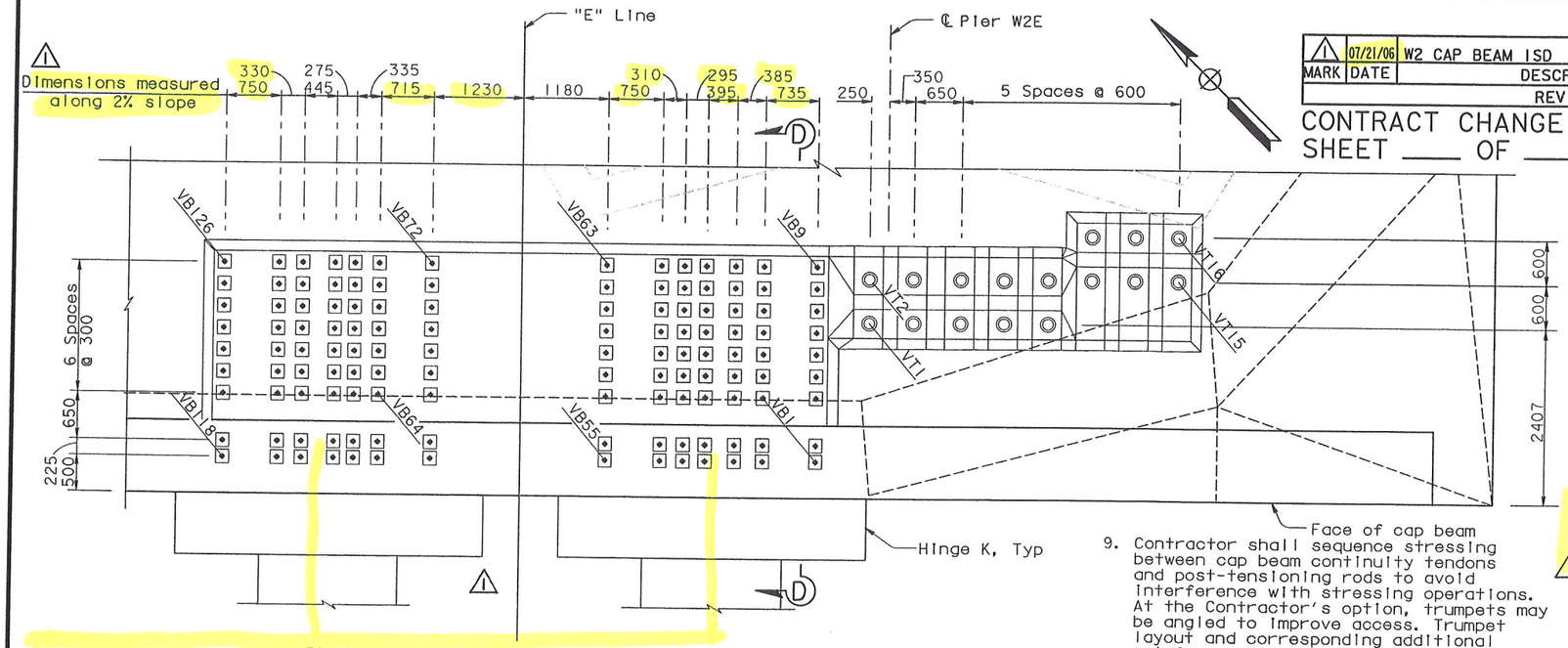

PLAN-VERTICAL STRAND TENDON AND POST-TENSION ROD ARRANGEMENT
DETAIL A
1:40

9. Contractor shall sequence stressing between cap beam continuity tendons and post-tensioning rods to avoid interference with stressing operations. At the Contractor's option, trumpets may be angled to improve access. Trumpet layout and corresponding additional reinforcement shall be submitted to the Engineer for review and approval.

3 10. Blockouts at the dead end are not required. At the Contractor's option, blockouts can be provided, subject to the Engineers review and approval of the blockout and reinforcement details.

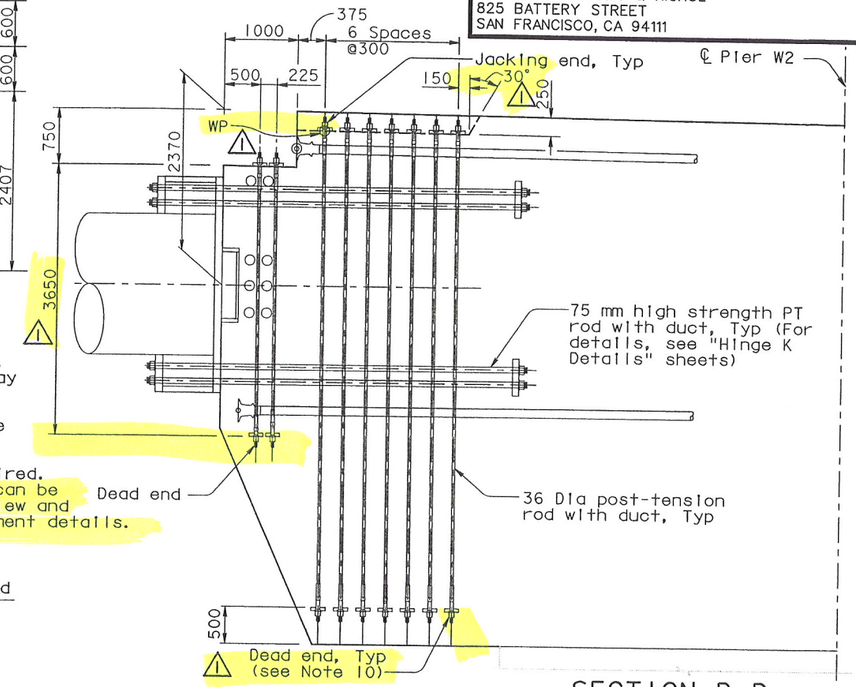

SECTION D-D
1:20 (see Note 9)

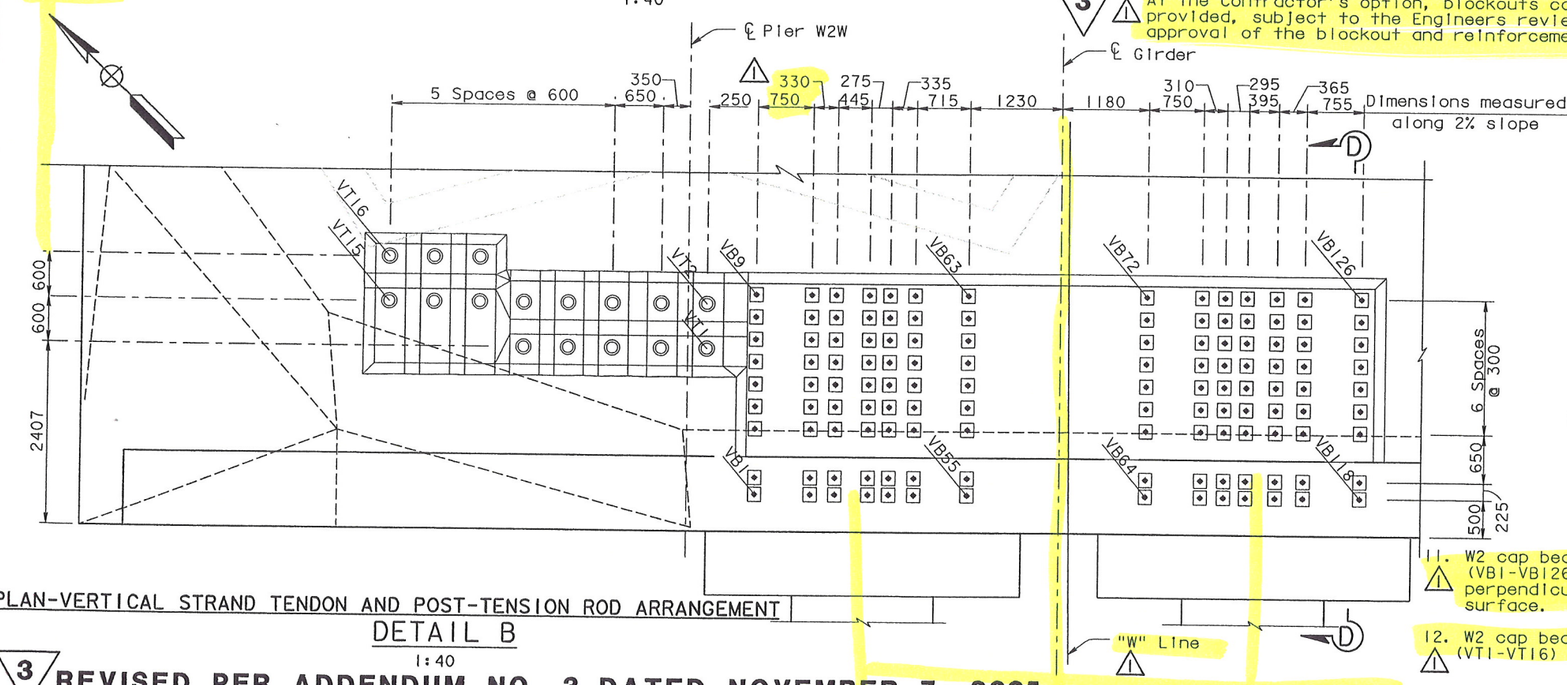

PLAN-VERTICAL STRAND TENDON AND POST-TENSION ROD ARRANGEMENT
DETAIL B
1:40

11. W2 cap beam vertical PT rods (VB1-VB126) shall be placed perpendicular to the top concrete surface.

12. W2 cap beam vertical tendons (VT1-VT16) shall be placed vertical.

REGISTERED PROFESSIONAL ENGINEER James P. Duxbury No. C 64677 Exp. 06/30/07 CIVIL STATE OF CALIFORNIA

FOR REVISIONS ONLY

NOTES:

1. For additional details, see "W2 Cap Beam Post-Tensioning Details No.5" and "W2 Cap Beam Post-Tensioning Details No.7" sheets.
2. Jacking force in the W2 cap beam vertical tendons (VT1-VT16) shall be 2350 kN typical.
3. Jacking force in the W2 cap beam vertical PT rods (VB1-VB126) shall be 734 kN typical.
4. For hinge K details, see "Hinge K Details" sheets.
5. W2 cap beam vertical PT rods are ASTM A722 high strength 36 Dia rods (fu=1030 MPa), with standard galvanized steel ducts, unless specified otherwise.
6. W2 cap beam vertical tendons are ASTM A416 Grade 270 (fu=1860 MPa), low relaxation, 12-15 Dia seven wire strand PT, unless specified otherwise.
7. For additional prestressing details, see "Prestressing Notes" sheet.
8. For general stressing sequence, see "Pier W2 Construction Sequence" sheet.

3 REVISED PER ADDENDUM NO. 3 DATED NOVEMBER 7, 2005

ALL DIMENSIONS ARE IN MILLIMETERS UNLESS OTHERWISE SHOWN

R. Valizadeh/V. Toan/Y.L./W.L./F.C.
DESIGN OVERSIGHT
Reza Valizadeh / Vang Toan / Y. Liu
SIGN OFF DATE 07/21/06

	BY	CHECKED
DESIGN	J. Sun	M. Chen
DETAILS	J. Duxbury	M. Chen
QUANTITIES	S. Shi	D. Harrison

PREPARED FOR THE STATE OF CALIFORNIA DEPARTMENT OF TRANSPORTATION

R. Manzanarez
PROJECT ENGINEER

BRIDGE NO. 34-0006L/R
KILOMETER POST 13.2/13.9

SAN FRANCISCO OAKLAND BAY BRIDGE
EAST SPAN SEISMIC SAFETY PROJECT
SELF-ANCHORED SUSPENSION BRIDGE
(SUPERSTRUCTURE & TOWER)

W2 CAP BEAM POST-TENSIONING DETAILS NO.10

Rev. Date: 5-18-98

ORIGINAL SCALE IN MILLIMETERS FOR REDUCED PLANS 0 10 20 30 40 50 60 70 80 90 100

CU 04
EA 0120F1

DISREGARD PRINTS BEARING EARLIER REVISION DATES

REVISION DATES (PRELIMINARY STAGE ONLY): 08/08/99 05/28/01 04/08/02 07/24/02 12/18/02 10/13/05

SHEET 054R1 OF

FILE => p:\bb\04-012001\sas ready august 2005\cco#23\aeopt10.dgn

100% PS&E

USERNAME => vignatova DATE PLOTTED => 14 JUL 2006 TIME PLOTTED => 09:50:58

DIST.	COUNTY	ROUTE	KILOMETER POST TOTAL PROJECT	SHEET NO.	TOTAL SHEETS
04	SF	80	13.2/13.9	472R1	1204

REGISTERED ENGINEER - CIVIL

12-6-04
PLANS APPROVAL DATE

REGISTERED PROFESSIONAL ENGINEER John Sun No. C 54648 Exp. 12/31/05 CIVIL STATE OF CALIFORNIA

The State of California or its officers or agents shall not be responsible for the accuracy or completeness of electronic copies of this plan sheet.

T.Y. LIN / MOFFATT & NICHOL
825 BATTERY STREET
SAN FRANCISCO, CA 94111

To get to the web site, go to: http://www.dot.ca.gov

Caltrans Metric

REGISTERED PROFESSIONAL ENGINEER James P. Duxbury No. C 64677 Exp. 06/30/07 CIVIL STATE OF CALIFORNIA

FOR REVISIONS ONLY

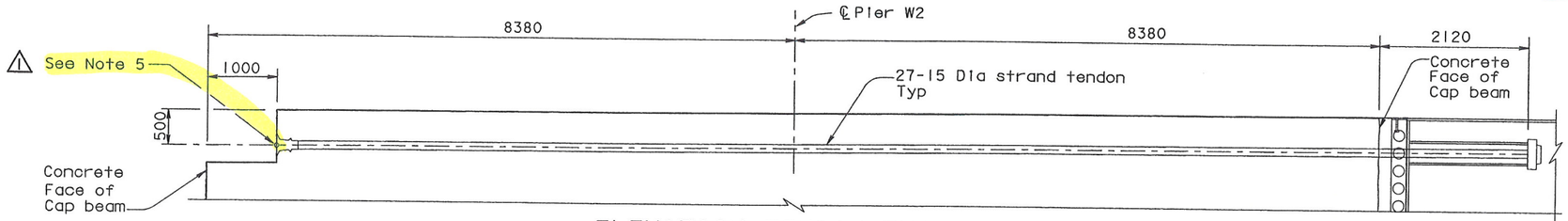

ELEVATION-TENDON TYPE 1

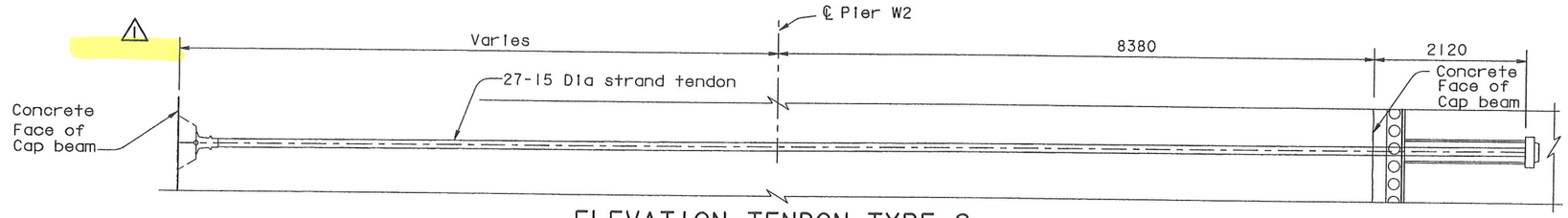

ELEVATION-TENDON TYPE 2

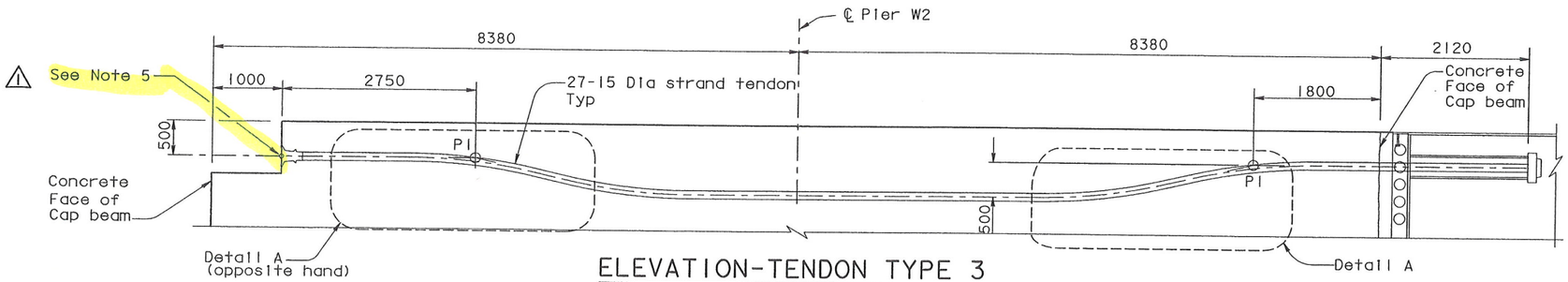

ELEVATION-TENDON TYPE 3

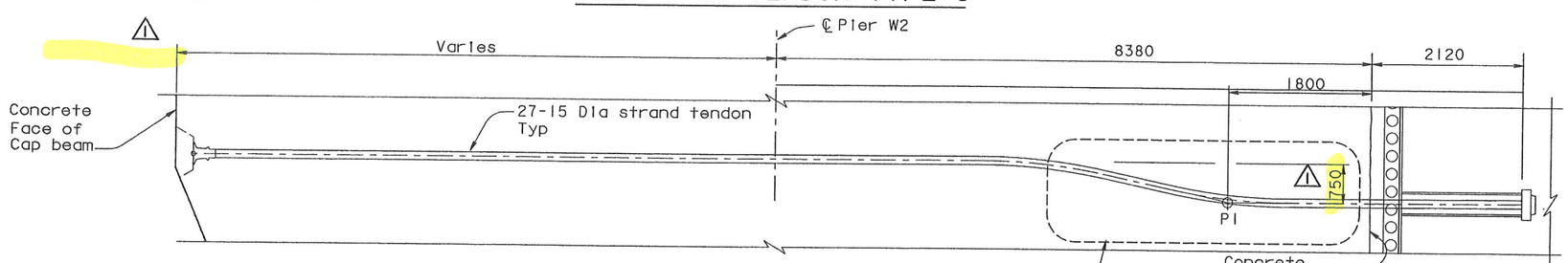

ELEVATION-TENDON TYPE 4

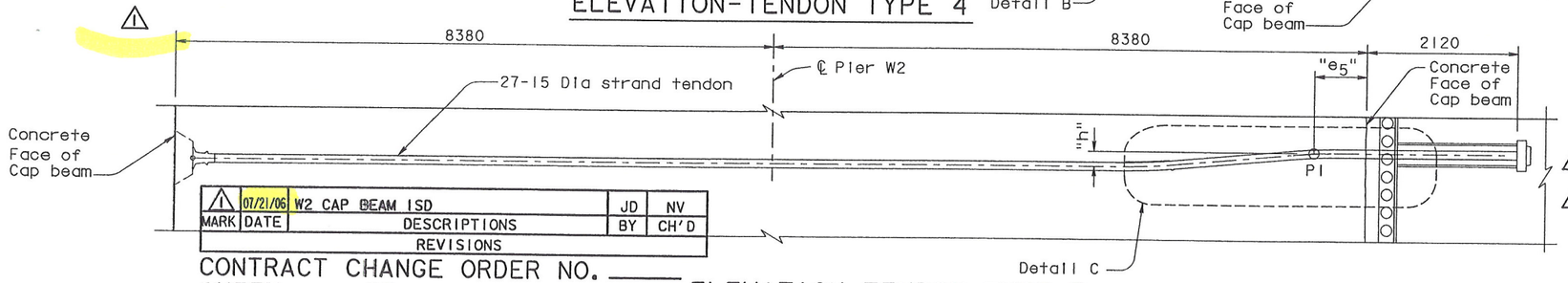

ELEVATION-TENDON TYPE 5

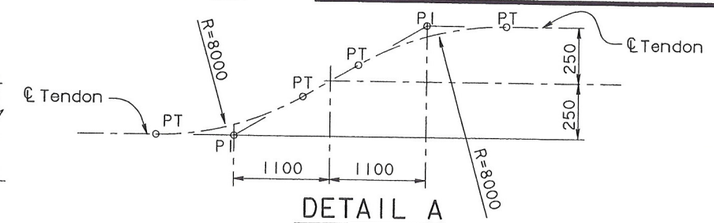

DETAIL A
NTS

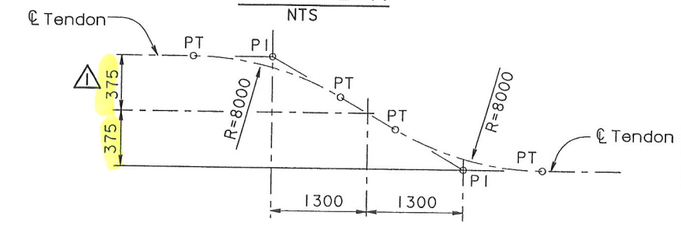

DETAIL B
NTS

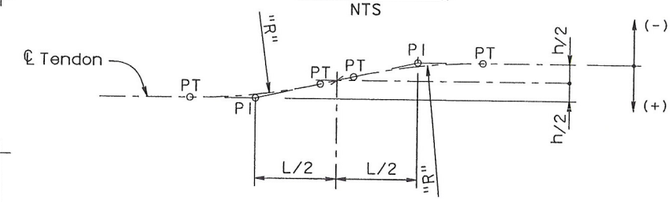

DETAIL C
NTS

NOTES:

1. For additional details, see "W2 Cap Beam Post-Tensioning Details No.5" through "W2 Cap Beam Post-Tensioning Details No.10" sheets.
2. For tendon type designation, see "W2 Cap Beam Post-Tensioning Details No.12" sheet.
3. For PT blockout dimensions, see "W2 Cap Beam Blockout Details" sheets.
4. For dimension "h", "L", "e5" and "R", see "W2 Cap Beam Post-Tensioning Details No.12" sheet.
5. Adjust vertical face to be normal to the axis of the tendon.
6. Jacking of continuity tendons shall not crush the ducts of the CBT transverse tendons. Where necessary, extra strong steel pipes (ASTM A53 Type S, Grade B, f_y =240 MPa) shall be provided together with necessary hardware connecting the steel pipes to galvanized corrugated steel duct.

MARK	DATE	DESCRIPTIONS	BY	CH'D
1	07/21/06	W2 CAP BEAM ISD	JD	NV

REVISIONS

CONTRACT CHANGE ORDER NO. ____
SHEET ___ OF ___

ALL DIMENSIONS ARE IN MILLIMETERS UNLESS OTHERWISE SHOWN

R. Valizadeh/V. Toan/Y.L./W.L./F.C.
DESIGN OVERSIGHT
SIGN OFF DATE 07/21/06
Rev. Date: 5-18-98

	BY	CHECKED	
DESIGN	J. Sun	M. Chen	
DETAILS	J. Duxbury	M. Chen	
QUANTITIES	S. Shi	D. Harrison	

PREPARED FOR THE STATE OF CALIFORNIA DEPARTMENT OF TRANSPORTATION

CHECKED R. Manzanarez
PROJECT ENGINEER

BRIDGE NO. 34-0006L/R
KILOMETER POST 13.2/13.9

SAN FRANCISCO OAKLAND BAY BRIDGE
EAST SPAN SEISMIC SAFETY PROJECT
SELF-ANCHORED SUSPENSION BRIDGE
(SUPERSTRUCTURE & TOWER)

W2 CAP BEAM POST-TENSIONING DETAILS NO.11

ORIGINAL SCALE IN MILLIMETERS FOR REDUCED PLANS 0 10 20 30 40 50 60 70 80 90 100

CU 04
EA 0120F1

DISREGARD PRINTS BEARING EARLIER REVISION DATES

REVISION DATES (PRELIMINARY STAGE ONLY) 09/28/99 05/31/01 04/08/02 07/09/02 12/19/02

SHEET 055R1 OF

FILE => p:\bb\04-012001\sas readv august 2005\cco#23\aeoptll.dgn

USERNAME => vignatovsk DATE PLOTTED => 14 JUL 2006 TIME PLOTTED => 09:51:50

100 % PS&E

DIST.	COUNTY	ROUTE	KILOMETER POST TOTAL PROJECT	SHEET NO.	TOTAL SHEETS
04	SF	80	13.2/13.9	473R1	1204

REGISTERED ENGINEER - CIVIL

12-6-04
PLANS APPROVAL DATE

REGISTERED PROFESSIONAL ENGINEER John Sun No. C 54648 Exp. 12/31/05 CIVIL STATE OF CALIFORNIA

The State of California or its officers or agents shall not be responsible for the accuracy or completeness of electronic copies of this plan sheet.

T.Y. LIN / MOFFATT & NICHOL
825 BATTERY STREET
SAN FRANCISCO, CA 94111

To get to the web site, go to: http://www.dot.ca.gov

W2 CAP BEAM CONTINUITY TENDON TABLE-1 FOR "E" LINE

Tendon No.	Type	Tendon No.	Type
1A	1	24A	1
1B	2	24B	2
2A	1	25A	1
2B	5	25B	2
3A	1	26A	1
3B	5	26B	2
4A	1	27A	1
4B	5	27B	2
5A	1	28A	1
5B	2	28B	2
6A	1	29A	3
6B	5	29B	2
7A	1	30A	3
7B	5	30B	5,9
8A	1	31A	3
8B	2	31B	5
9A	1	32A	1
9B	2	32B	5
10A	1	33A	1
10B	2	33B	5
11A	1	34A	1
11B	2	34B	2
12A	1	35A	1
12B	2	35B	2
13A	1	36A	1
13B	2	36B	5
14A	1	37A	1
14B	2	37B	5
15A	1	38A	1
15B	8	38B	2
16A	1	39A	1
16B	8	39B	5
17A	1	40A	1
17B	2	40B	5
18A	1	41A	1
18B	10	41B	5
19A	1	42A	1
19B	4	42B	2
20A	1	43	2
20B	4	44	2
21A	1		
21B	4		
22A	1		
22B	2		
23A	1		
23B	2		

W2 CAP BEAM CONTINUITY TENDON TABLE-1 FOR "W" LINE

Tendon No.	Type	Tendon No.	Type
1A	1	24A	1
1B	2	24B	2
2A	1	25A	1
2B	5	25B	2
3A	1	26A	1
3B	5	26B	8
4A	1	27A	1
4B	5	27B	8
5A	1	28A	1
5B	2	28B	2
6A	1	29A	3
6B	5	29B	2
7A	1	30A	3
7B	5	30B	5,9
8A	1	31A	3
8B	2	31B	5
9A	1	32A	1
9B	2	32B	5
10A	1	33A	1
10B	2	33B	5
11A	1	34A	1
11B	2	34B	2
12A	1	35A	1
12B	2	35B	2
13A	1	36A	1
13B	2	36B	5
14A	1	37A	1
14B	2	37B	5
15A	1	38A	1
15B	2	38B	2
16A	1	39A	1
16B	2	39B	5
17A	1	40A	1
17B	2	40B	5
18A	1	41A	1
18B	2	41B	5
19A	1	42A	1
19B	4	42B	6
20A	1	43	2
20B	4	44	7
21A	1		
21B	4,8		
22A	1		
22B	4,8		
23A	1		
23B	2		

W2 CAP BEAM CONTINUITY TENDON TABLE-2 FOR "E" LINE

Tendon No.	h	L	e_5	R
2B	-40	2200	500	8000
3B	+40	2200	500	8000
4B	-70	2200	500	8000
6B	-40	2200	500	8000
7B	+40	2200	500	8000
30B	-1210	2400	1200	4000
31B	-978	2400	1200	5000
32B	-763	2400	1200	4000
33B	-470	2400	1200	8000
36B	+40	2200	500	8000
37B	-40	2200	500	8000
39B	-70	2200	500	8000
40B	+40	2200	500	8000
41B	-40	2200	500	8000

Tendon No.	p
15B	-50
16B	-50
30B	+200

W2 CAP BEAM CONTINUITY TENDON TABLE-2 FOR "W" LINE

Tendon No.	h	L	e_5	R
2B	-40	2200	500	8000
3B	+40	2200	500	8000
4B	-70	2200	500	8000
6B	-40	2200	500	8000
7B	+40	2200	500	8000
30B	-1285	-1285	1200	4000
31B	-1053	2400	1200	5000
32B	-795	2400	1200	5000
33B	-515	2400	1200	8000
36B	+40	2200	500	8000
37B	-40	2200	500	8000
39B	-70	2200	500	8000
40B	+40	2200	500	8000
41B	-40	2200	500	8000

Tendon No.	p
21B	+100
22B	+100
26B	-50
27B	-50
30B	-200
44	+1200

NOTES:

1. For Type 1 through Type 5 tendon geometry, see "W2 Cap Beam Post-Tensioning Details No. 11" sheet.
2. For general stressing sequence, see "Pier W2 Construction Sequence" sheet.
3. For additional prestressing details, see "Prestressing Notes" sheet.

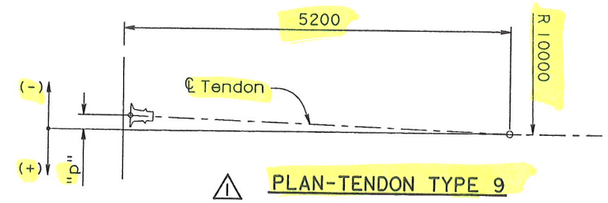

PLAN-TENDON TYPE 9

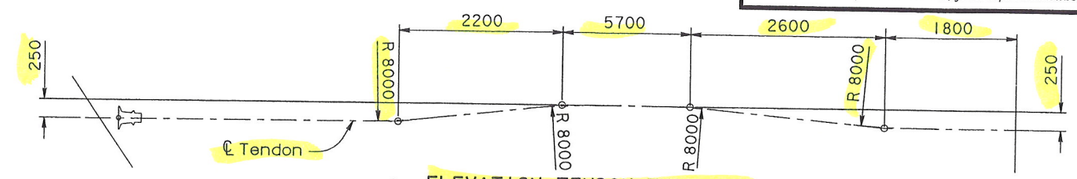

ELEVATION-TENDON TYPE 10

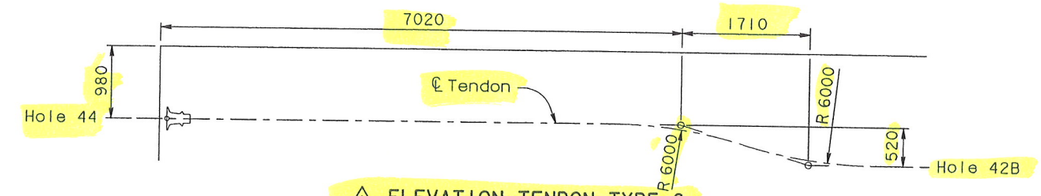

ELEVATION-TENDON TYPE 6

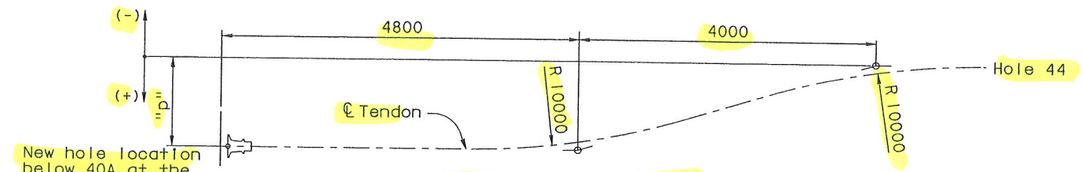

PLAN-TENDON TYPE 7

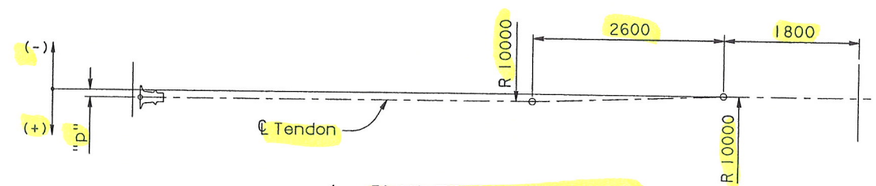

PLAN-TENDON TYPE 8

REGISTERED PROFESSIONAL ENGINEER James P. Duxbury No. C 64677 Exp. 06/30/07 CIVIL STATE OF CALIFORNIA

FOR REVISIONS ONLY

MARK	DATE	DESCRIPTIONS	BY	CH'D
1	07/21/06	W2 CAP BEAM ISD	JD	NV

REVISIONS

CONTRACT CHANGE ORDER NO. _____
SHEET ____ OF ____

100% PS&E

ALL DIMENSIONS ARE IN MILLIMETERS UNLESS OTHERWISE SHOWN

R. Valizadeh/V. Toan/Y.L./W.L./F.C.
DESIGN OVERSIGHT
SIGN OFF DATE 07/21/06
Rev. Date: 5-18-98

	BY	CHECKED
DESIGN	J. Sun	M. Chen
DETAILS	J. Duxbury	M. Chen
QUANTITIES	S. Shi	D. Harrison

PREPARED FOR THE STATE OF CALIFORNIA DEPARTMENT OF TRANSPORTATION

R. Manzanarez
PROJECT ENGINEER

BRIDGE NO. 34-0006L/R
KILOMETER POST 13.2/13.9

SAN FRANCISCO OAKLAND BAY BRIDGE
EAST SPAN SEISMIC SAFETY PROJECT
SELF-ANCHORED SUSPENSION BRIDGE
(SUPERSTRUCTURE & TOWER)

W2 CAP BEAM POST-TENSIONING DETAILS NO. 12

ORIGINAL SCALE IN MILLIMETERS FOR REDUCED PLANS 0 10 20 30 40 50 60 70 80 90 100

CU 04
EA 0120F1

DISREGARD PRINTS BEARING EARLIER REVISION DATES

REVISION DATES (PRELIMINARY STAGE ONLY): 05/24/01 04/08/02 07/24/02 12/19/02

SHEET 056R1 OF

FILE => p:\bb\04-012001\sas readv august 2005\oco#23\aecpt12.dgn

USERNAME => vignatovs RATE PLOTTED => 14 JUL 2006 TIME PLOTTED => 09:53:09

Caltrans now has a web site! To get to the web site, go to: http://www.dot.ca.gov

DIST.	COUNTY	ROUTE	KILOMETER POST TOTAL PROJECT	SHEET NO.	TOTAL SHEETS
04	SF	80	13.2/13.9	498R1	1204

Caltrans Metric

REGISTERED ENGINEER - CIVIL

12-6-04
PLANS APPROVAL DATE

REGISTERED PROFESSIONAL ENGINEER John Sun No. C 54648 Exp. 12/31/05 CIVIL STATE OF CALIFORNIA

The State of California or its officers or agents shall not be responsible for the accuracy or completeness of electronic copies of this plan sheet.

T.Y. LIN / MOFFATT & NICHOL
825 BATTERY STREET
SAN FRANCISCO, CA 94111

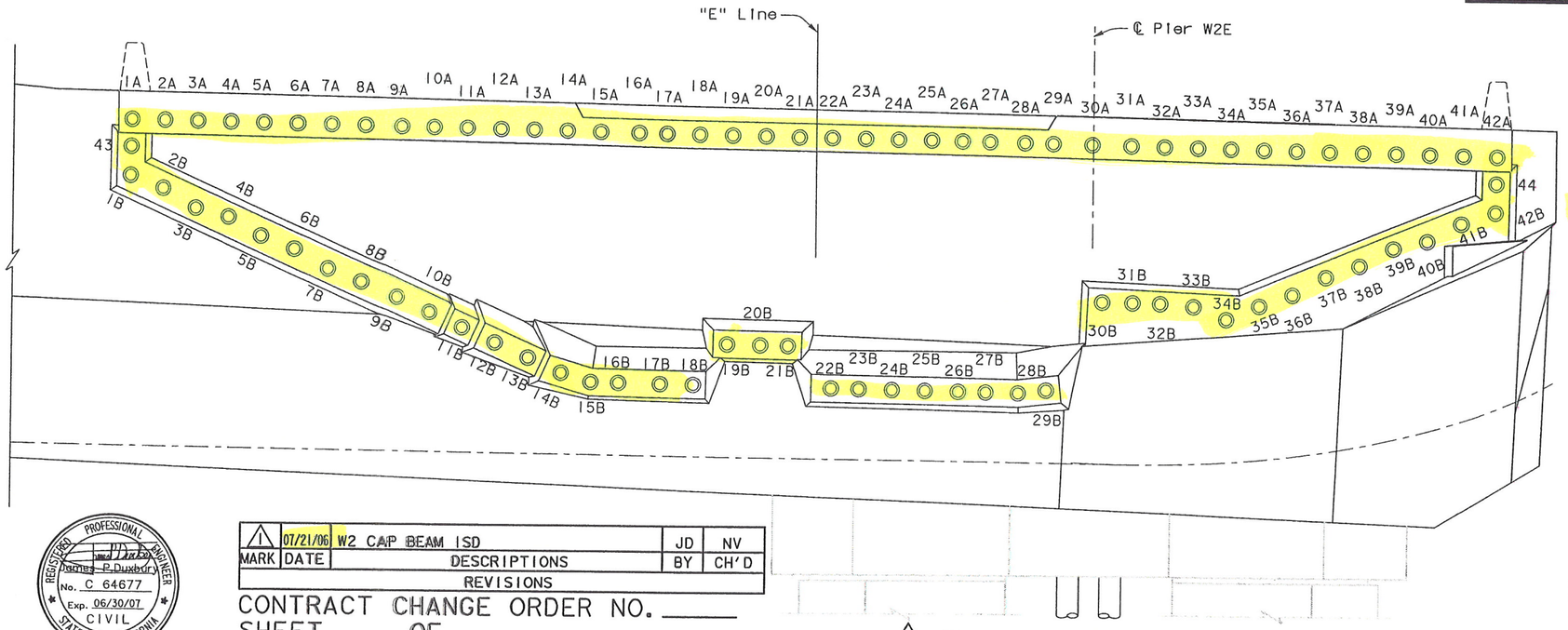

(Distance from west face to blockout)

BLOCKOUT DEPTH
NTS

MARK	DATE	DESCRIPTIONS	BY	CH'D
1	07/21/06	W2 CAP BEAM ISD	JD	NV

REVISIONS

REGISTERED PROFESSIONAL ENGINEER James P. Duxbury No. C 64677 Exp. 06/30/07 CIVIL STATE OF CALIFORNIA

FOR REVISIONS ONLY

CONTRACT CHANGE ORDER NO. _____
SHEET ____ OF ____

1 ELEVATION (W2 cap beam continuity PT tendons)
1:50 (Hinge K not shown for clarity)

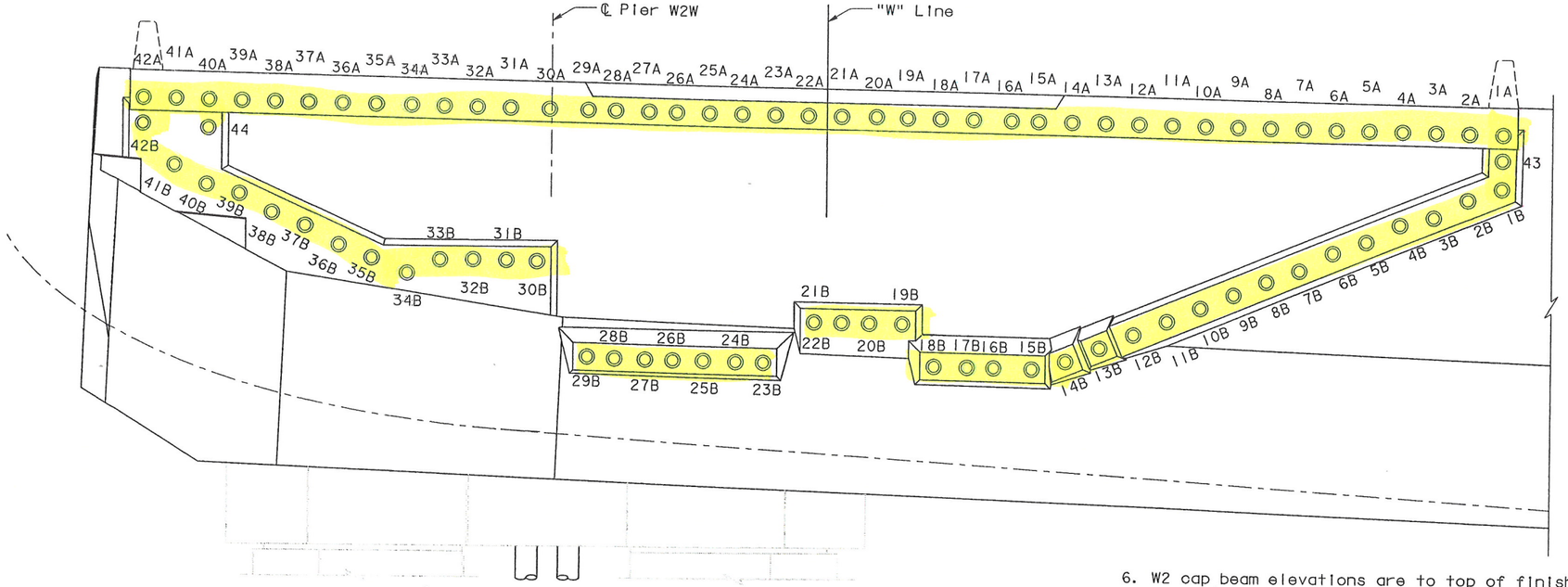

1 ELEVATION (W2 cap beam continuity PT tendons)
1:50 (Hinge K not shown for clarity)

6. W2 cap beam elevations are to top of finished concrete and do not include overlay thickness.

ALL DIMENSIONS ARE IN MILLIMETERS UNLESS OTHERWISE SHOWN

W2 CAP BEAM CONTINUITY PT TENDON BLOCKOUT TABLE 1

"E" Line						"W" Line					
PT	Detail	X	PT	Detail	X	PT	Detail	X	PT	Detail	X
1A	A		1B	A		1A	A		1B	A	
2A	C		2B	B		2A	C		2B	B	
3A	C		3B	B		3A	C		3B	B	
4A	C		4B	B		4A	C		4B	B	
5A	C		5B	B	200	5A	C		5B	B	200
6A	C		6B	B		6A	C		6B	B	
7A	C		7B	B		7A	C		7B	B	
8A	C		8B	B		8A	C		8B	B	
9A	C		9B	B		9A	C		9B	B	
10A	C		10B	B		10A	C		10B	B	
11A	C		11B	D	350	11A	C		11B	B	
12A	C		12B	D	550	12A	C		12B	B	
13A	C		13B	D		13A	C		13B	D	300
14A	C		14B	E		14A	C		14B	D	425
15A	C		15B	E		15A	C		15B	E	
16A	C		16B	E	680	16A	C		16B	E	550
17A	C		17B	E		17A	C		17B	E	
18A	C		18B	E		18A	C		18B	E	
19A	C	1000	19B	F		19A	C		19B	H	
20A	C		20B	F	350	20A	C	1000	20B	H	200
21A	C		21B	F		21A	C		21B	H	
22A	C		22B	E		22A	C		22B	H	
23A	C		23B	E		23A	C		23B	E	
24A	C		24B	E		24A	C		24B	E	
25A	C		25B	E	680	25A	C		25B	E	
26A	C		26B	E		26A	C		26B	E	550
27A	C		27B	E		27A	C		27B	E	
28A	C		28B	E		28A	C		28B	E	
29A	C		29B	E		29A	C		29B	E	
30A	C		30B	G		30A	C		30B	G	
31A	C		31B	G		31A	C		31B	G	
32A	C		32B	G		32A	C		32B	G	
33A	C		33B	G		33A	C		33B	G	
34A	C		34B	G		34A	C		34B	G	
35A	C		35B	G	200	35A	C		35B	G	200
36A	C		36B	G		36A	C		36B	G	
37A	C		37B	G		37A	C		37B	G	
38A	C		38B	G		38A	C		38B	G	
39A	C		39B	G		39A	C		39B	G	
40A	C		40B	G		40A	C		40B	G	
41A	C		41B	G		41A	C		41B	G	
42A	A		42B	A		42A	A		42B	T	
43	A	200				43	A	200			
44	A					44	T				

NOTES:

1. For blockout Details A through D, see "W2 Cap Beam Blockout Details No. 3" sheet.
2. For blockout Details E through G, see "W2 Cap Beam Blockout Details No. 4" sheet.
3. 1 For blockout Details H and T, see "W2 Cap Beam Blockout Details No. 5" sheet.
4. For hinge K details, see "Hinge K Details" sheets.
5. For additional prestressing details, see "Prestressing Notes" sheet.

100% PS&E

USERNAME => vignatovs DATE PLOTTED => 14 JUL 2006 TIME PLOTTED => 09:54:06

R. Vallizadeh/V. Toan/Y.L./W.L./F.C.
DESIGN OVERSIGHT
Ryan Vallizadeh / Vang Toan / Y Liu
SIGN OFF DATE 07/21/06

Rev. Date: 5-18-98

DESIGN	BY J. Sun	CHECKED M. Chen	
DETAILS	BY J. Duxbury	CHECKED M. Chen	
QUANTITIES	BY S. Shi	CHECKED D. Harrison	

PREPARED FOR THE STATE OF CALIFORNIA DEPARTMENT OF TRANSPORTATION

R. Manzanarez
PROJECT ENGINEER

BRIDGE NO. 34-0006L/R
KILOMETER POST 13.2/13.9

SAN FRANCISCO OAKLAND BAY BRIDGE
EAST SPAN SEISMIC SAFETY PROJECT
SELF-ANCHORED SUSPENSION BRIDGE
(SUPERSTRUCTURE & TOWER)

W2 CAP BEAM BLOCKOUT DETAILS NO. 1

ORIGINAL SCALE IN MILLIMETERS FOR REDUCED PLANS 0 10 20 30 40 50 60 70 80 90 100

CU 04
EA 0120F1

DISREGARD PRINTS BEARING EARLIER REVISION DATES

REVISION DATES (PRELIMINARY STAGE ONLY) 08/08/99 05/31/01 01/08/02 07/01/02 12/19/02

SHEET 8 OF 1R1

FILE => p:\bb\04-012001\sas readv august 2005\cco#23\aecbb01.dgn

DIST.	COUNTY	ROUTE	KILOMETER POST TOTAL PROJECT	SHEET NO.	TOTAL SHEETS
04	SF	80	13.2/13.9	499R1	1204

REGISTERED ENGINEER - CIVIL

12-6-04

PLANS APPROVAL DATE

REGISTERED PROFESSIONAL ENGINEER John Sun No. C 54648 Exp. 12/31/05 CIVIL STATE OF CALIFORNIA

The State of California or its officers or agents shall not be responsible for the accuracy or completeness of electronic copies of this plan sheet.

T.Y. LIN / MOFFATT & NICHOL
825 BATTERY STREET
SAN FRANCISCO, CA 94111

Caltrans now has a web site! To get to the web site, go to: http://www.dot.ca.gov

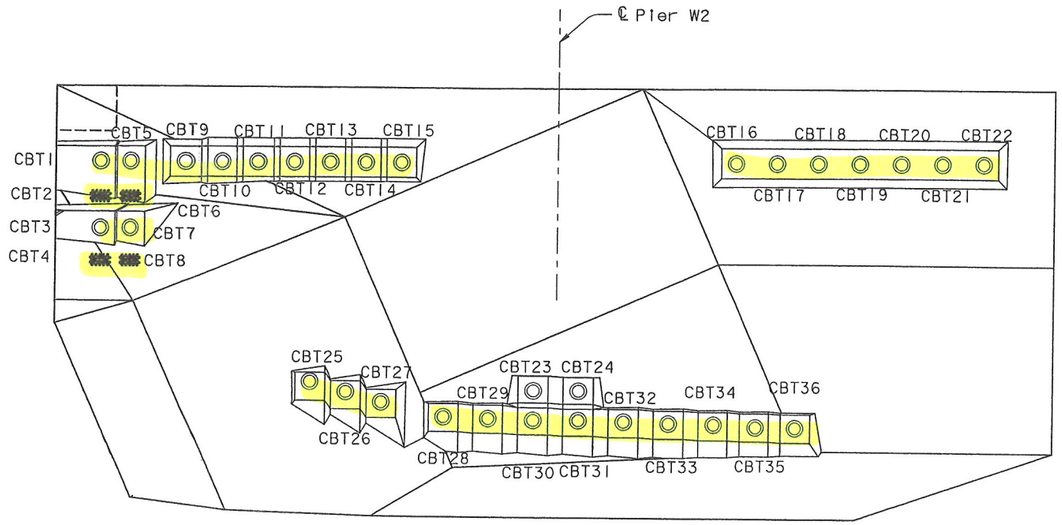

⚠1 ELEVATION (Cap beam transverse PT tendons)
1:50

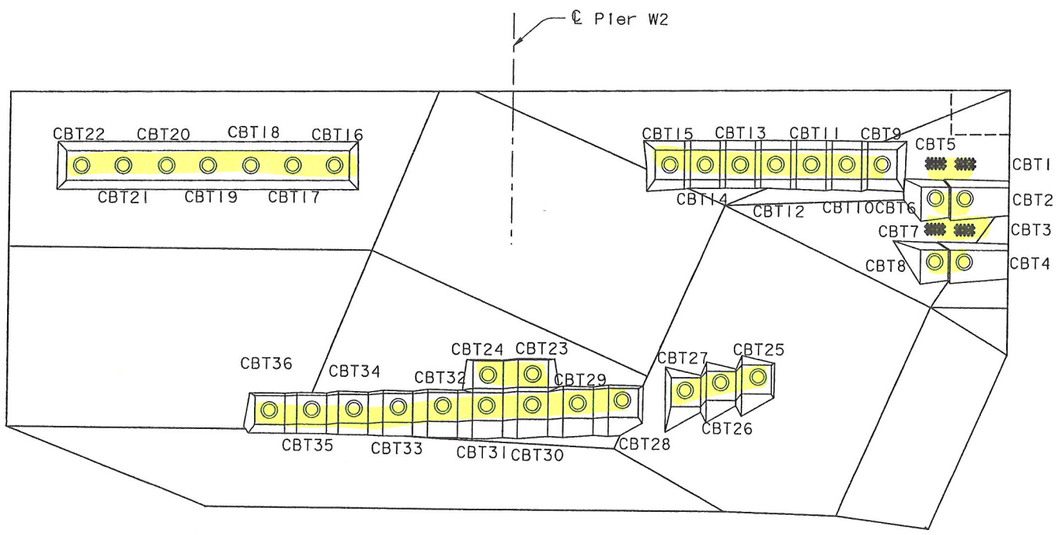

⚠1 ELEVATION (Cap beam transverse PT tendons)
1:50

CAP BEAM TRANSVERSE PT TENDON BLOCKOUT TABLE

South face		North face	
Tendon	Blockout Detail	Tendon	Blockout Detail
CBT1	R	CBT1	S
CBT2	R	CBT2	S
CBT3	R	CBT3	S
CBT4	R	CBT4	S
CBT5	R	CBT5	S
CBT6	R	CBT6	S
CBT7	R	CBT7	S
CBT8	R	CBT8	S
CBT9	J	CBT9	J
CBT10	J	CBT10	J
CBT11	K	CBT11	K
CBT12	K	CBT12	K
CBT13	K	CBT13	K
CBT14	K	CBT14	K
CBT15	K	CBT15	K
CBT16	L	CBT16	L
CBT17	L	CBT17	L
CBT18	L	CBT18	L
CBT19	L	CBT19	L
CBT20	L	CBT20	L
CBT21	L	CBT21	L
CBT22	L	CBT22	L
CBT23	P	CBT23	P
CBT24	P	CBT24	P
CBT25	M	CBT25	M
CBT26	M	CBT26	M
CBT27	M	CBT27	M
CBT28	N	CBT28	N
CBT29	N	CBT29	N
CBT30	P	CBT30	P
CBT31	P	CBT31	P
CBT32	N	CBT32	N
CBT33	N	CBT33	N
CBT34	N	CBT34	N
CBT35	N	CBT35	N
CBT36	Q	CBT36	Q

REGISTERED PROFESSIONAL ENGINEER James P. Duxbury No. C 64677 Exp. 06/30/07 CIVIL STATE OF CALIFORNIA

FOR REVISIONS ONLY

MARK	DATE	DESCRIPTIONS	BY	CH'D
⚠1	07/21/06	W2 CAP BEAM ISD	JD	NV

REVISIONS

CONTRACT CHANGE ORDER NO. _____
SHEET ____ OF ____

NOTES:

1. For Details J through L, see "W2 Cap Beam Blockout Details No.6" sheet.
2. For Details M and N, see "W2 Cap Beam Blockout Details No.7" sheet.
3. For Details P and Q, see "W2 Cap Beam Blockout Details No.8" sheet.
4. For Detail R, see "W2 Cap Beam Blockout Details No.9" sheet.
5. For Detail S, see "W2 Cap Beam Blockout Details No.10" sheet.
6. For additional prestressing details, see "Prestressing Notes" sheet.

100% PS&E

ALL DIMENSIONS ARE IN MILLIMETERS UNLESS OTHERWISE SHOWN

R. Vallizadeh/V. Toan/Y.L./W.L./F.C.
DESIGN OVERSIGHT
SIGN OFF DATE 07/21/06

Rev. Date: 5-18-98

	BY	CHECKED
DESIGN	J. Sun	M. Chen
DETAILS	J. Duxbury	M. Chen
QUANTITIES	S. Shi	D. Harrison

PREPARED FOR THE STATE OF CALIFORNIA DEPARTMENT OF TRANSPORTATION

R. Manzanarez
PROJECT ENGINEER

BRIDGE NO. 34-0006L/R
KILOMETER POST 13.2/13.9

SAN FRANCISCO OAKLAND BAY BRIDGE
EAST SPAN SEISMIC SAFETY PROJECT
SELF-ANCHORED SUSPENSION BRIDGE
(SUPERSTRUCTURE & TOWER)

W2 CAP BEAM BLOCKOUT DETAILS NO.2

ORIGINAL SCALE IN MILLIMETERS FOR REDUCED PLANS 0 10 20 30 40 50 60 70 80 90 100

CU 04
EA 0120F1

DISREGARD PRINTS BEARING EARLIER REVISION DATES

REVISION DATES (PRELIMINARY STAGE ONLY): 08/28/99 05/24/01 04/08/02 07/24/02 12/19/02

SHEET 82R1 OF

FILE => p:\bb\04-012001\sas ready august 2005\cco#23\aecbb02.dgn

USERNAME => vignatovsk DATE PLOTTED => 14 JUL 2006 TIME PLOTTED => 09:58:36

DIST.	COUNTY	ROUTE	KILOMETER POST TOTAL PROJECT	SHEET NO.	TOTAL SHEETS
04	SF	80	13.2/13.9	500R1	1204

REGISTERED ENGINEER - CIVIL

12-6-04

PLANS APPROVAL DATE

PROFESSIONAL ENGINEER — REGISTERED — John Sun — No. C 54648 — Exp. 12/31/05 — CIVIL — STATE OF CALIFORNIA

The State of California or its officers or agents shall not be responsible for the accuracy or completeness of electronic copies of this plan sheet.

T.Y. LIN / MOFFATT & NICHOL
825 BATTERY STREET
SAN FRANCISCO, CA 94111

Caltrans now has a web site! To get to the web site, go to: http://www.dot.ca.gov

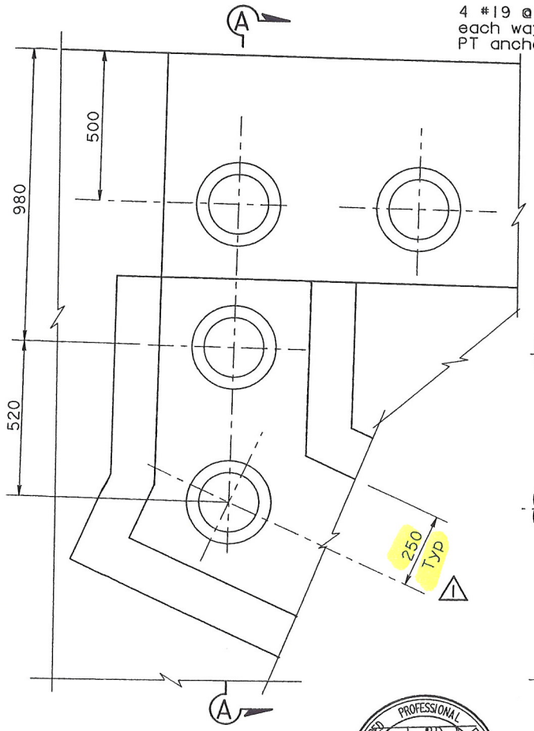

DETAIL A
1:10

PROFESSIONAL ENGINEER — REGISTERED — James P. Duxbury — No. C 64677 — Exp. 06/30/07 — CIVIL — STATE OF CALIFORNIA

FOR REVISIONS ONLY

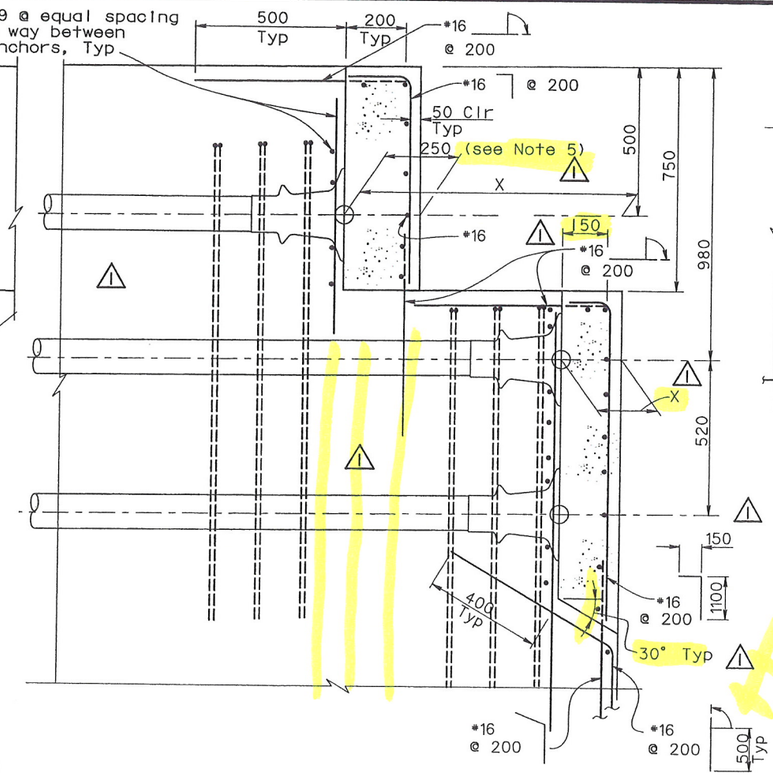

SECTION A-A
1:10

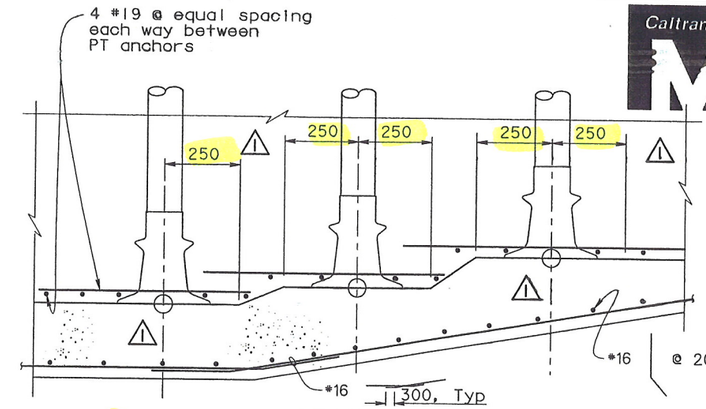

SECTION D-D
1:10

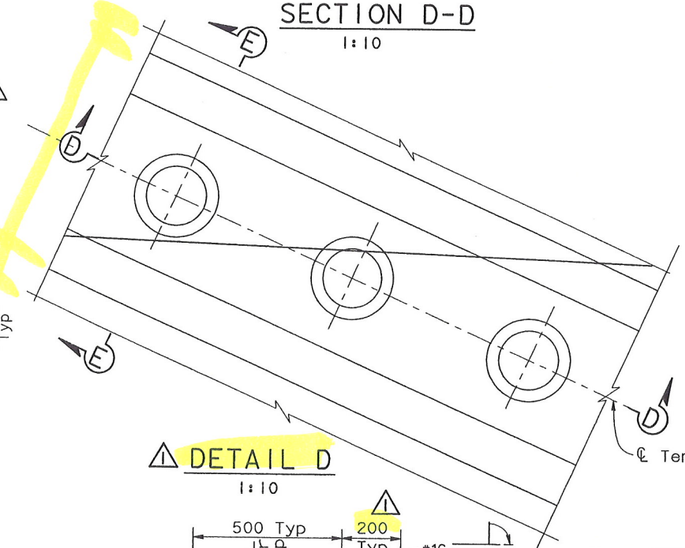

DETAIL D
1:10

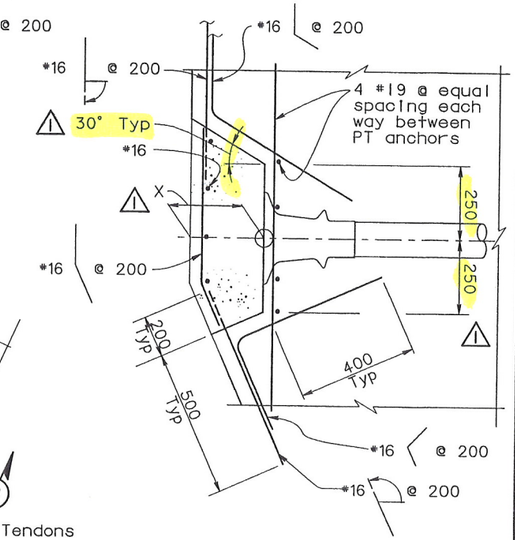

SECTION E-E
1:10

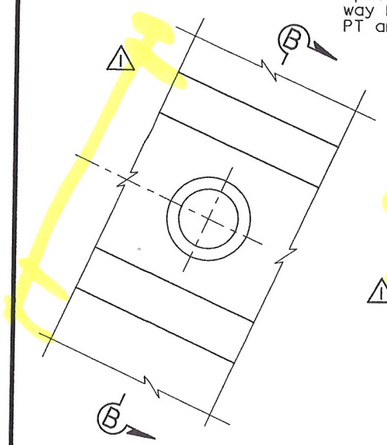

DETAIL B
1:10

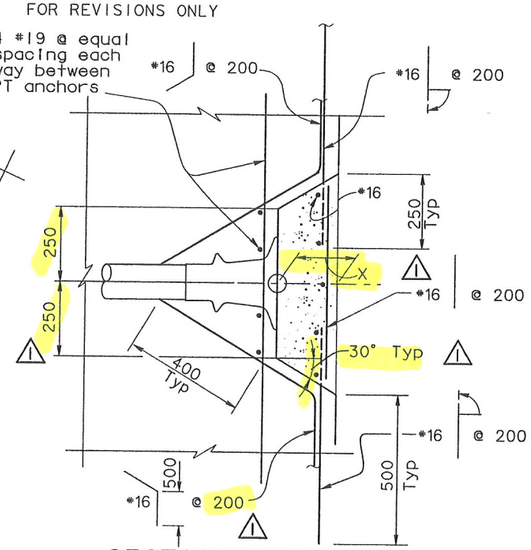

SECTION B-B
1:10

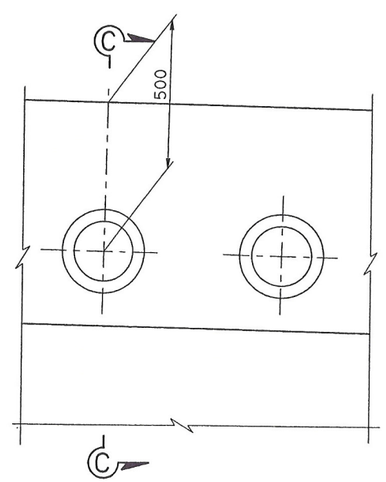

DETAIL C
1:10

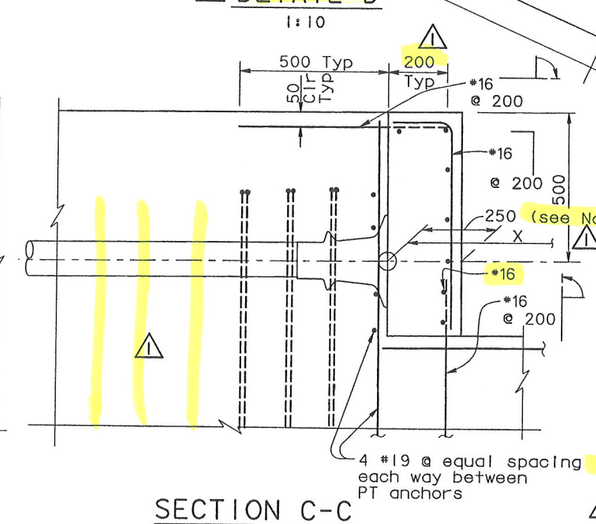

SECTION C-C
1:10

MARK	DATE	DESCRIPTIONS	BY	CH'D
1	07/21/06	W2 CAP BEAM ISD	JD	NV

REVISIONS

CONTRACT CHANGE ORDER NO. _____
SHEET ____ OF ____

NOTES:

1. For additional details, see "W2 Cap Beam Blockout Details No.1" sheet.
2. Cap beam reinforcement not shown for clarity.
3. Local confining spiral reinforcement per tendon anchors shall be provided by PT tendon hardware supplier.
4. Blockouts on the cap beam south face shown, blockouts on the cap beam north face similar.
5. At Contractor's option, concrete blockouts can be placed at the same time as the Hinge K Expansion Joint consolidated concrete.

ALL DIMENSIONS ARE IN MILLIMETERS UNLESS OTHERWISE SHOWN

R. Vallzadeh/V. Toan/Y.L./W.L./F.C.
DESIGN OVERSIGHT
SIGN OFF DATE 07/21/06

Rev. Date: 5-18-98

	BY	CHECKED
DESIGN	J. Sun	M. Chen
DETAILS	J. Duxbury	M. Chen
QUANTITIES	S. Shi	D. Harrison

PREPARED FOR THE STATE OF CALIFORNIA DEPARTMENT OF TRANSPORTATION

R. Manzanarez
PROJECT ENGINEER

BRIDGE NO. 34-0006L/R
KILOMETER POST 13.2/13.9

SAN FRANCISCO OAKLAND BAY BRIDGE
EAST SPAN SEISMIC SAFETY PROJECT
SELF-ANCHORED SUSPENSION BRIDGE
(SUPERSTRUCTURE & TOWER)

W2 CAP BEAM BLOCKOUT DETAILS NO. 3

ORIGINAL SCALE IN MILLIMETERS FOR REDUCED PLANS 0 10 20 30 40 50 60 70 80 90 100

CU 04
EA 0120F1

DISREGARD PRINTS BEARING EARLIER REVISION DATES

REVISION DATES (PRELIMINARY STAGE ONLY) 08/08/99 05/24/01 04/08/02 07/24/02 12/19/02

SHEET 83R1 OF

FILE => p:\bb\04-012001\sas ready august 2005\oco#23\aecbb03.dgn

USERNAME => vlignatovsk DATE PLOTTED => 14 JUL 2006 TIME PLOTTED => 09:59:25

100 % PS&E

DIST.	COUNTY	ROUTE	KILOMETER POST TOTAL PROJECT	SHEET NO.	TOTAL SHEETS
04	SF	80	13.2/13.9	501R11	204

REGISTERED ENGINEER - CIVIL

12-6-04
PLANS APPROVAL DATE

REGISTERED PROFESSIONAL ENGINEER John Sun No. C 54648 Exp. 12/31/05 CIVIL STATE OF CALIFORNIA

The State of California or its officers or agents shall not be responsible for the accuracy or completeness of electronic copies of this plan sheet.

T.Y. LIN / MOFFATT & NICHOL
825 BATTERY STREET
SAN FRANCISCO, CA 94111

Caltrans now has a web site! To get to the web site, go to: http://www.dot.ca.gov

REGISTERED PROFESSIONAL ENGINEER James P. Duxbury No. C 64677 Exp. 06/30/07 CIVIL STATE OF CALIFORNIA

FOR REVISIONS ONLY

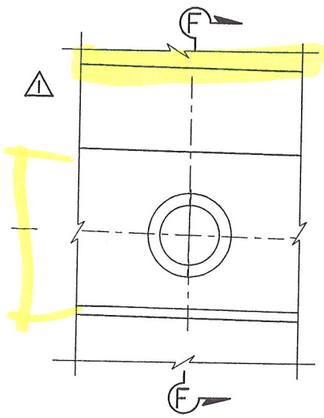

DETAIL E
1:10

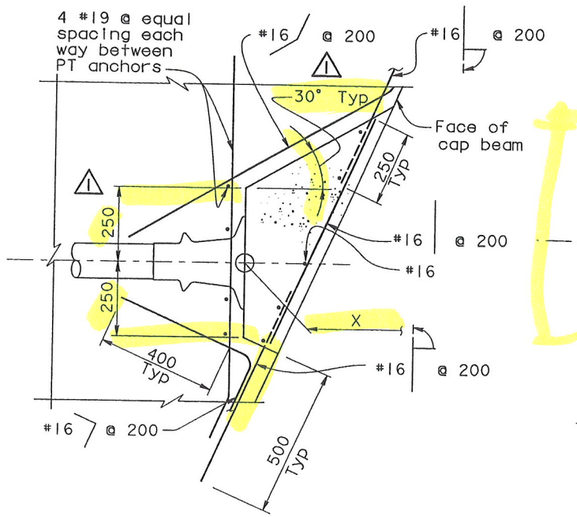

SECTION F-F
1:10

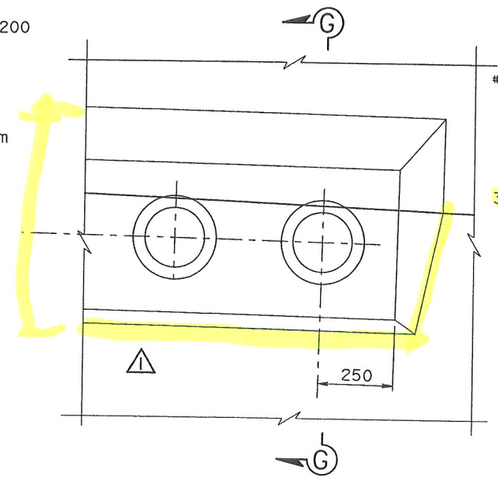

DETAIL F
1:10

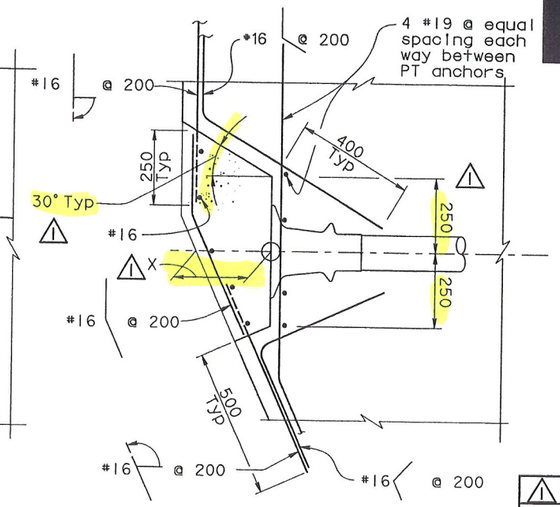

SECTION G-G
1:10

MARK	DATE	DESCRIPTIONS	BY	CH'D
1	07/21/06	W2 CAP BEAM ISD	JD	NV

REVISIONS

CONTRACT CHANGE ORDER NO. _____
SHEET ____ OF ____

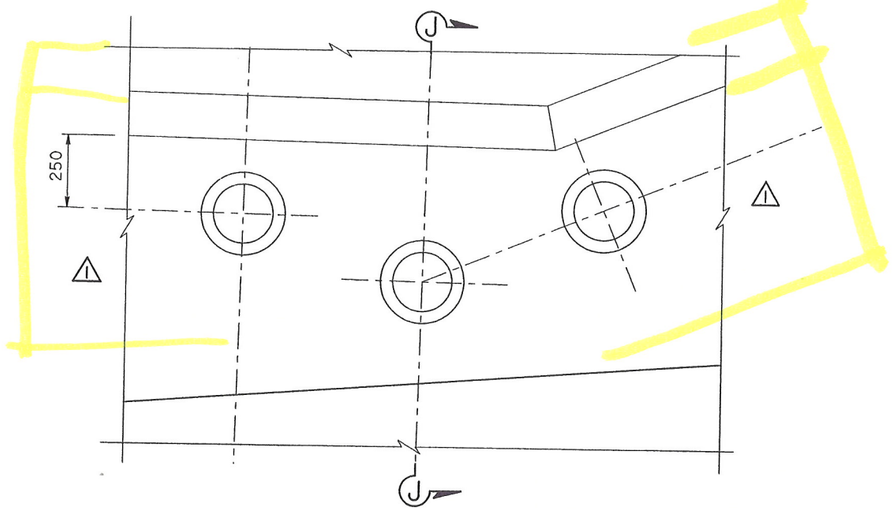

DETAIL G
1:10

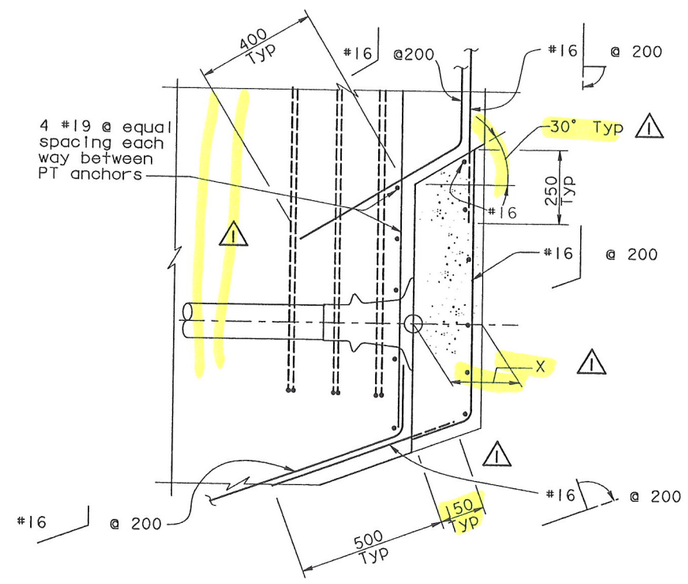

SECTION J-J
1:10

NOTES:

1. For additional details, see "W2 Cap Beam Blockout Details No.1" sheet.
2. Cap beam reinforcement not shown for clarity.
3. Local confining spiral reinforcement per tendon anchors shall be provided by PT tendon hardware supplier.
4. Blockouts on the cap beam south face shown, blockouts on the cap beam north face similar.

ALL DIMENSIONS ARE IN MILLIMETERS UNLESS OTHERWISE SHOWN

R. Vallzadeh/V. Toan/Y.L./W.L./F.C.
DESIGN OVERSIGHT
Roger Vallzadeh / Vong Toan / Y. Lin
SIGN OFF DATE 07/21/06
Rev. Date: 5-18-98

	BY	CHECKED
DESIGN	J. Sun	M. Chen
DETAILS	J. Duxbury	M. Chen
QUANTITIES	S. Shi	D. Harrison

PREPARED FOR THE STATE OF CALIFORNIA DEPARTMENT OF TRANSPORTATION

R. Manzanarez
PROJECT ENGINEER

BRIDGE NO. 34-0006L/R
KILOMETER POST 13.2/13.9

SAN FRANCISCO OAKLAND BAY BRIDGE
EAST SPAN SEISMIC SAFETY PROJECT
SELF-ANCHORED SUSPENSION BRIDGE
(SUPERSTRUCTURE & TOWER)

W2 CAP BEAM BLOCKOUT DETAILS NO. 4

ORIGINAL SCALE IN MILLIMETERS FOR REDUCED PLANS 0 10 20 30 40 50 60 70 80 90 100

CU 04
EA 0120F1

DISREGARD PRINTS BEARING EARLIER REVISION DATES → 05/24/01 04/08/02 07/01/02 12/19/02

REVISION DATES (PRELIMINARY STAGE ONLY)

SHEET 84R1 OF

FILE => p:\bb\04-012001\sas readv august 2005\cco#23\aecbb04.dgn

100 % PS&E

USERNAME => vignatovs DATE PLOTTED => 14 JUL 2006 TIME PLOTTED => 10:00:18

DIST.	COUNTY	ROUTE	KILOMETER POST TOTAL PROJECT	SHEET NO.	TOTAL SHEETS
04	SF	80	13.2/13.9	502R1	1204

Caltrans Metric

REGISTERED ENGINEER - CIVIL

12-6-04
PLANS APPROVAL DATE

REGISTERED PROFESSIONAL ENGINEER
John Sun
No. C 54648
Exp. 12/31/05
CIVIL
STATE OF CALIFORNIA

The State of California or its officers or agents shall not be responsible for the accuracy or completeness of electronic copies of this plan sheet.

T.Y. LIN / MOFFATT & NICHOL
825 BATTERY STREET
SAN FRANCISCO, CA 94111

Caltrans now has a web site! To get to the web site, go to: http://www.dot.ca.gov

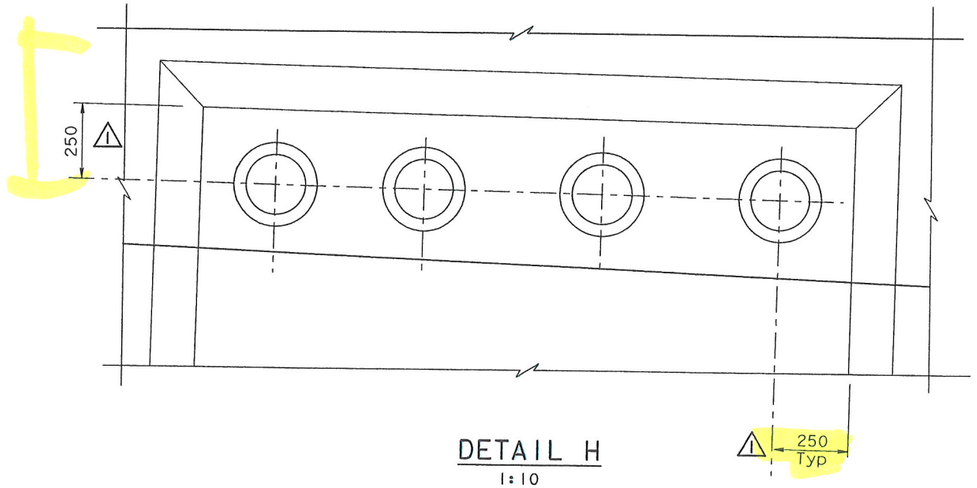

DETAIL H
1:10

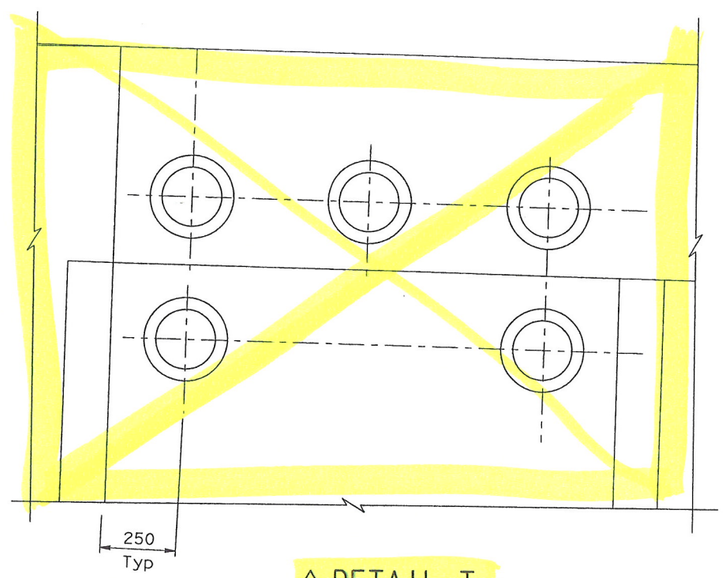

1 DETAIL T
1:10

REGISTERED PROFESSIONAL ENGINEER
Jaclyn P. Duxbury
No. C 64677
Exp. 06/30/07
CIVIL
STATE OF CALIFORNIA

FOR REVISIONS ONLY

MARK	DATE	DESCRIPTIONS	BY	CH'D
1	07/21/06	W2 CAP BEAM ISD	JD	NV
		REVISIONS		

CONTRACT CHANGE ORDER NO. _____
SHEET ____ OF ____

NOTES:

1. For additional details, see "W2 Cap Beam Blockout Details No. 1" sheet.
2. Cap beam reinforcement not shown for clarity.
3. Local confining spiral reinforcement per tendon anchors shall be provided by PT tendon hardware supplier.
4. Blockouts on the cap beam south face shown, blockouts on the cap beam north face similar.

100 % PS&E

ALL DIMENSIONS ARE IN MILLIMETERS UNLESS OTHERWISE SHOWN

R. Valizadeh/V. Toan/Y.L./W.L./F.C.
DESIGN OVERSIGHT
SIGN OFF DATE 07/21/06
Rev. Date: 5-18-98

	BY	CHECKED	
DESIGN	J. Sun	M. Chen	
DETAILS	J. Duxbury	M. Chen	
QUANTITIES	S. Shi	D. Harrison	

PREPARED FOR THE STATE OF CALIFORNIA DEPARTMENT OF TRANSPORTATION

R. Manzanarez
PROJECT ENGINEER

BRIDGE NO. 34-0006L/R
KILOMETER POST 13.2/13.9

SAN FRANCISCO OAKLAND BAY BRIDGE
EAST SPAN SEISMIC SAFETY PROJECT
SELF-ANCHORED SUSPENSION BRIDGE
(SUPERSTRUCTURE & TOWER)

W2 CAP BEAM BLOCKOUT DETAILS NO. 5

ORIGINAL SCALE IN MILLIMETERS FOR REDUCED PLANS 0 10 20 30 40 50 60 70 80 90 100

CU 04
EA 0120F1

DISREGARD PRINTS BEARING EARLIER REVISION DATES → 05/31/01 01/08/02 01/09/02 12/19/02

REVISION DATES (PRELIMINARY STAGE ONLY)

SHEET 85R1 OF

FILE => p:\bb\04-012001\sas readv august 2005\cco#23\aecbb05.dgn

USERNAME => v1gndtovsik DATE PLOTTED => 14 JUL 2006 TIME PLOTTED => 10:01:09

DIST.	COUNTY	ROUTE	KILOMETER POST TOTAL PROJECT	SHEET NO.	TOTAL SHEETS
04	SF	80	13.2/13.9	503R1	1204

Caltrans Metric

REGISTERED ENGINEER - CIVIL

12-6-04
PLANS APPROVAL DATE

REGISTERED PROFESSIONAL ENGINEER John Sun No. C 54648 Exp. 12/31/05 CIVIL STATE OF CALIFORNIA

The State of California or its officers or agents shall not be responsible for the accuracy or completeness of electronic copies of this plan sheet.

T.Y. LIN / MOFFATT & NICHOL
825 BATTERY STREET
SAN FRANCISCO, CA 94111

Caltrans now has a web site! To get to the web site, go to: http://www.dot.ca.gov

REGISTERED PROFESSIONAL ENGINEER James P. Duxbury No. C 64677 Exp. 06/30/07 CIVIL STATE OF CALIFORNIA

FOR REVISIONS ONLY

MARK	DATE	DESCRIPTIONS	BY	CH'D
1	07/21/06	W2 CAP BEAM ISD	JD	NV
		REVISIONS		

CONTRACT CHANGE ORDER NO. ____
SHEET ____ OF ____

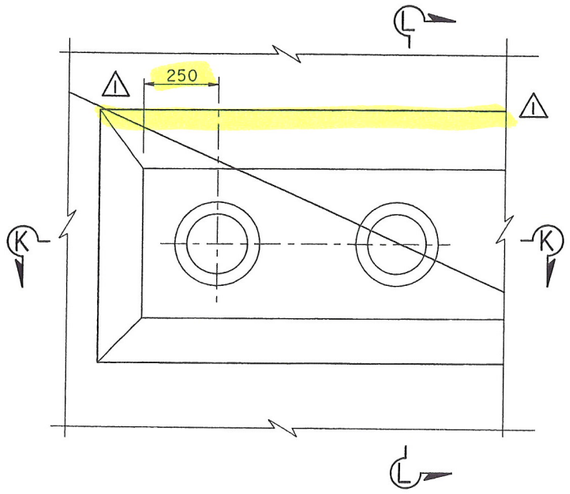

DETAIL J
1:10

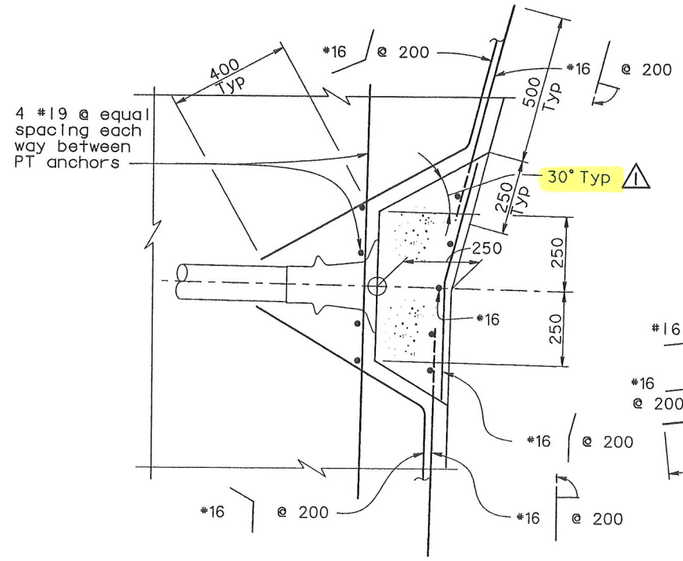

SECTION L-L
1:10

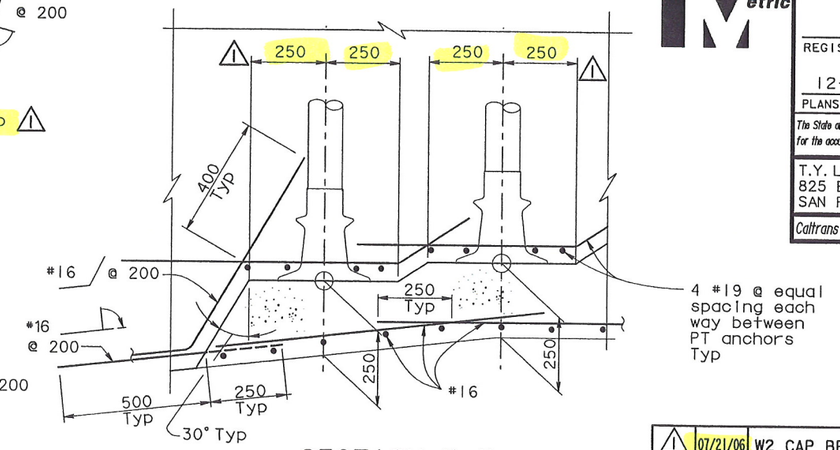

SECTION K-K
1:10

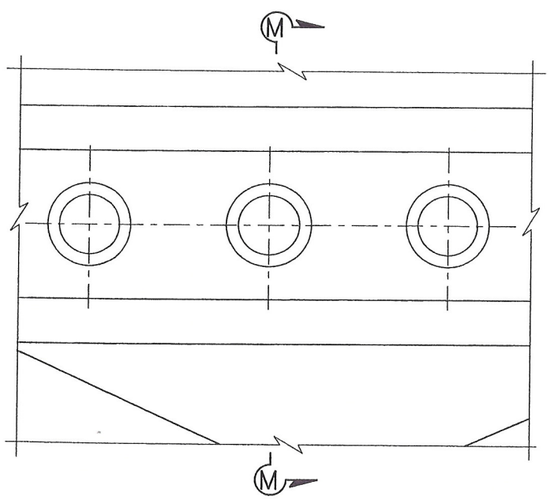

DETAIL K
1:10

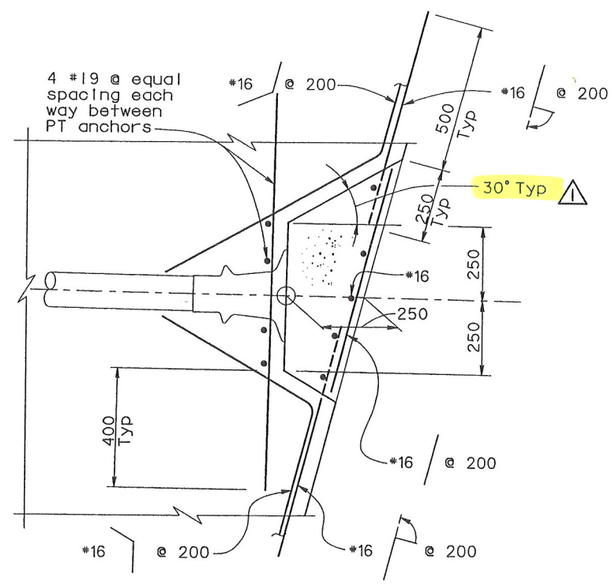

SECTION M-M
1:10

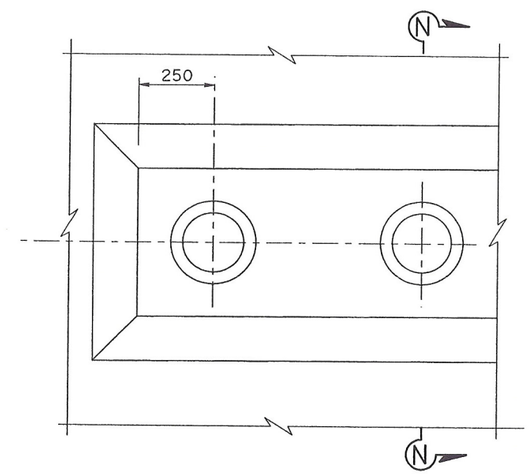

DETAIL L
1:10

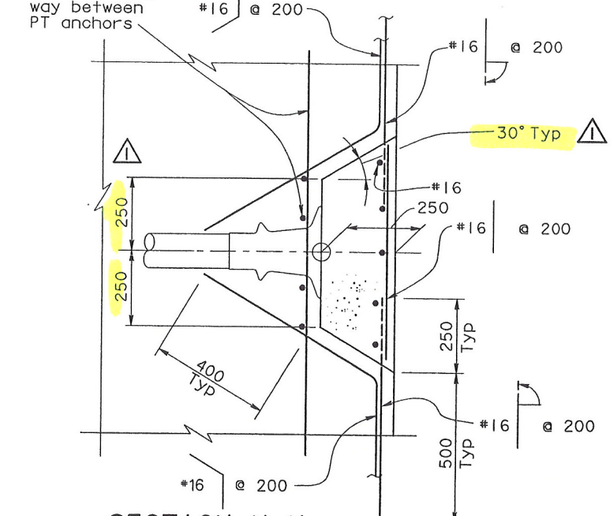

SECTION N-N
1:10

NOTES:

1. For additional details, see "W2 Cap Beam Blockout Details No.2" sheet.
2. Cap beam reinforcement not shown for clarity.
3. Local confining spiral reinforcement per tendon anchors shall be provided by PT tendon hardware supplier.
4. Blockouts on the cap beam south face shown, blockouts on the cap beam north face similar.

ALL DIMENSIONS ARE IN MILLIMETERS UNLESS OTHERWISE SHOWN

R. Vallizadeh/V. Toan/Y. L./W. L./F. C.
DESIGN OVERSIGHT
SIGN OFF DATE 07/21/06
Rev. Date: 5-18-98

	BY	CHECKED
DESIGN	J. Sun	M. Chen
DETAILS	J. Duxbury	M. Chen
QUANTITIES	S. Shi	D. Harrison

PREPARED FOR THE STATE OF CALIFORNIA DEPARTMENT OF TRANSPORTATION

R. Manzanarez
PROJECT ENGINEER

BRIDGE NO. 34-0006L/R
KILOMETER POST 13.2/13.9

SAN FRANCISCO OAKLAND BAY BRIDGE
EAST SPAN SEISMIC SAFETY PROJECT
SELF-ANCHORED SUSPENSION BRIDGE
(SUPERSTRUCTURE & TOWER)

W2 CAP BEAM BLOCKOUT DETAILS NO. 6

ORIGINAL SCALE IN MILLIMETERS FOR REDUCED PLANS 0 10 20 30 40 50 60 70 80 90 100

CU 04
EA 0120F1

DISREGARD PRINTS BEARING EARLIER REVISION DATES

REVISION DATES (PRELIMINARY STAGE ONLY) 05/31/01 01/07/02 01/21/02 12/19/02

SHEET 86R1 OF

FILE => p:\bb\04-012001\sas readv august 2005\cco#23\decbb06.dgn

USERNAME => vignatovs DATE PLOTTED => 14 JUL 2006 TIME PLOTTED => 10:02:05

100 % PS&E

DIST.	COUNTY	ROUTE	KILOMETER POST TOTAL PROJECT	SHEET NO.	TOTAL SHEETS
04	SF	80	13.2/13.9	504R1	1204

REGISTERED ENGINEER - CIVIL

12-6-04

PLANS APPROVAL DATE

REGISTERED PROFESSIONAL ENGINEER John Sun No. C 54648 Exp. 12/31/05 CIVIL STATE OF CALIFORNIA

The State of California or its officers or agents shall not be responsible for the accuracy or completeness of electronic copies of this plan sheet.

T.Y. LIN / MOFFATT & NICHOL
825 BATTERY STREET
SAN FRANCISCO, CA 94111

Caltrans now has a web site! To get to the web site, go to: http://www.dot.ca.gov

REGISTERED PROFESSIONAL ENGINEER James P. Duxbury No. C 64677 Exp. 06/30/07 CIVIL STATE OF CALIFORNIA

FOR REVISIONS ONLY

MARK	DATE	DESCRIPTIONS	BY	CH'D
1	07/21/06	W2 CAP BEAM ISD	JD	NV

REVISIONS

CONTRACT CHANGE ORDER NO. _____
SHEET ____ OF ____

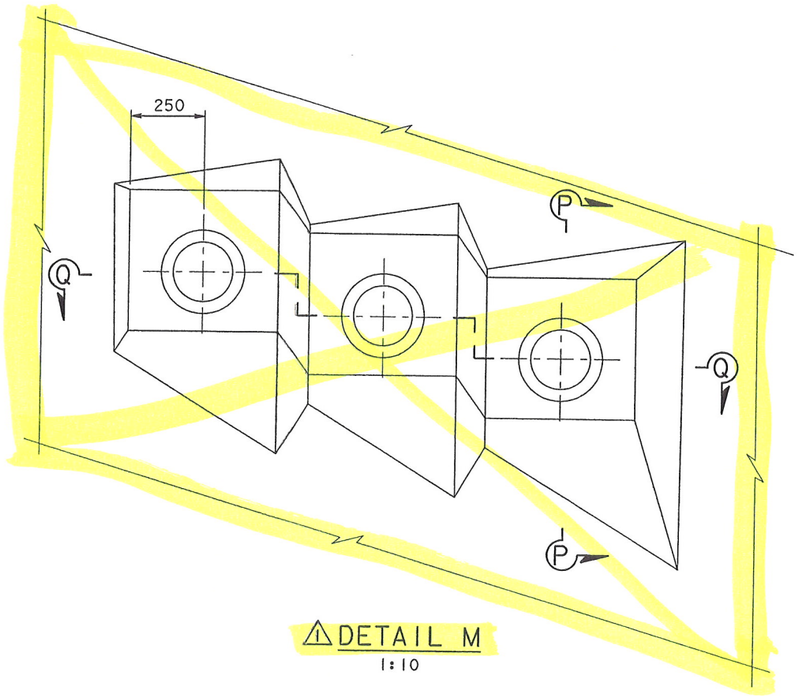

1 DETAIL M
1:10

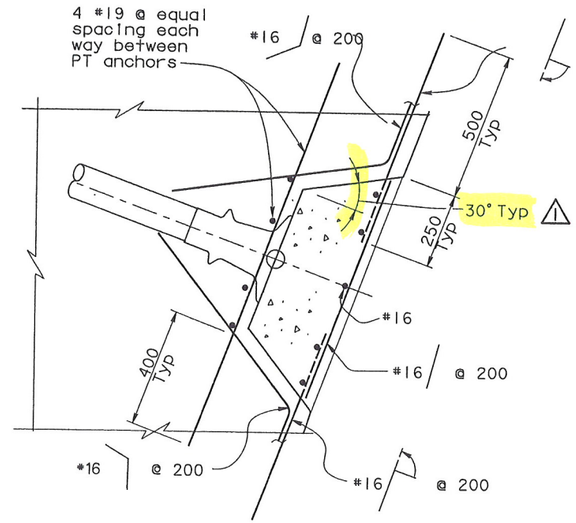

SECTION P-P
1:10

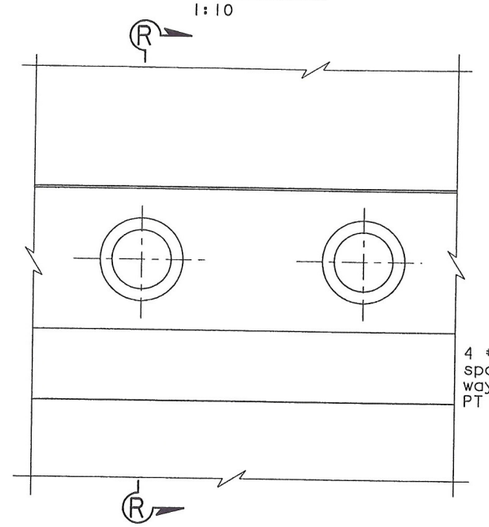

DETAIL N
1:10

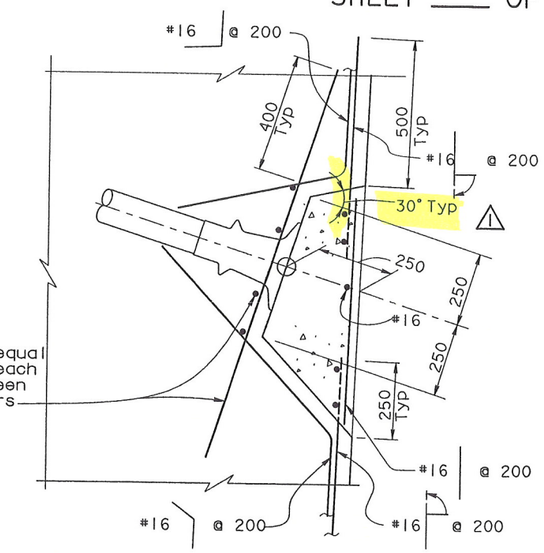

SECTION R-R
1:10

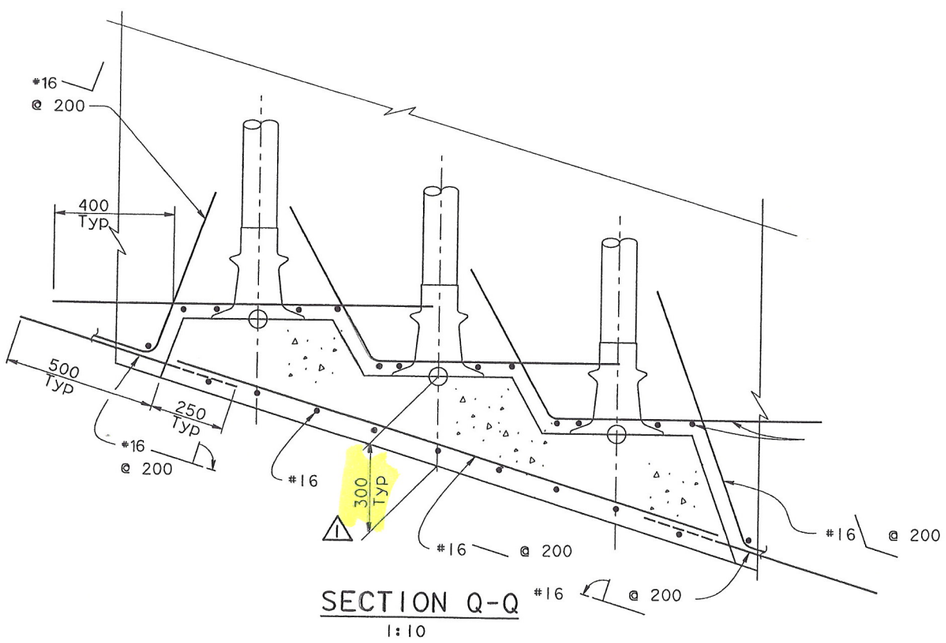

SECTION Q-Q
1:10

NOTES:

1. For additional details, see "W2 Cap Beam Blockout Details No.2" sheet.
2. Cap beam reinforcement not shown for clarity.
3. Local confining spiral reinforcement per tendon anchors shall be provided by PT tendon hardware supplier.
4. Blockouts on the cap beam south face shown, blockouts on the cap beam north face similar.

ALL DIMENSIONS ARE IN MILLIMETERS UNLESS OTHERWISE SHOWN

R. Valizadeh/V. Toan/Y. L./W. L./F. C.
DESIGN OVERSIGHT
SIGN OFF DATE 07/21/06
Rev. Date: 5-18-98

	BY	CHECKED
DESIGN	J. Sun	M. Chen
DETAILS	J. Duxbury	M. Chen
QUANTITIES	S. Shi	D. Harrison

PREPARED FOR THE STATE OF CALIFORNIA DEPARTMENT OF TRANSPORTATION

R. Manzanarez
PROJECT ENGINEER

BRIDGE NO. 34-0006L/R
KILOMETER POST 13.2/13.9

SAN FRANCISCO OAKLAND BAY BRIDGE
EAST SPAN SEISMIC SAFETY PROJECT
SELF-ANCHORED SUSPENSION BRIDGE
(SUPERSTRUCTURE & TOWER)

W2 CAP BEAM BLOCKOUT DETAILS NO. 7

ORIGINAL SCALE IN MILLIMETERS FOR REDUCED PLANS 0 10 20 30 40 50 60 70 80 90 100

CU 04
EA 0120F1

DISREGARD PRINTS BEARING EARLIER REVISION DATES

REVISION DATES (PRELIMINARY STAGE ONLY) 05/31/01 04/08/02 07/01/02

SHEET 087R1 OF

FILE => p:\bb\04-012001\sas readv august 2005\cco#23\aecbb07.dgn

USERNAME => vignatovsk DATE PLOTTED => 14 JUL 2006 TIME PLOTTED => 10:02:53

100 % PS&E

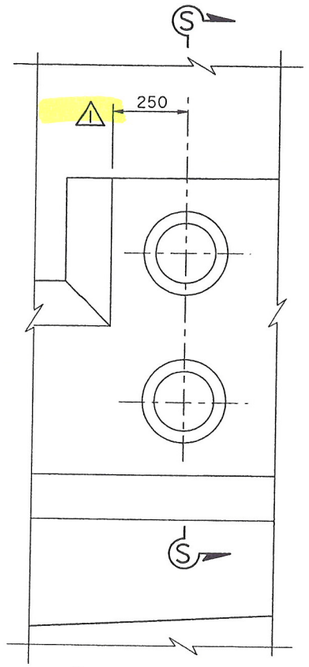

DETAIL P
1:10

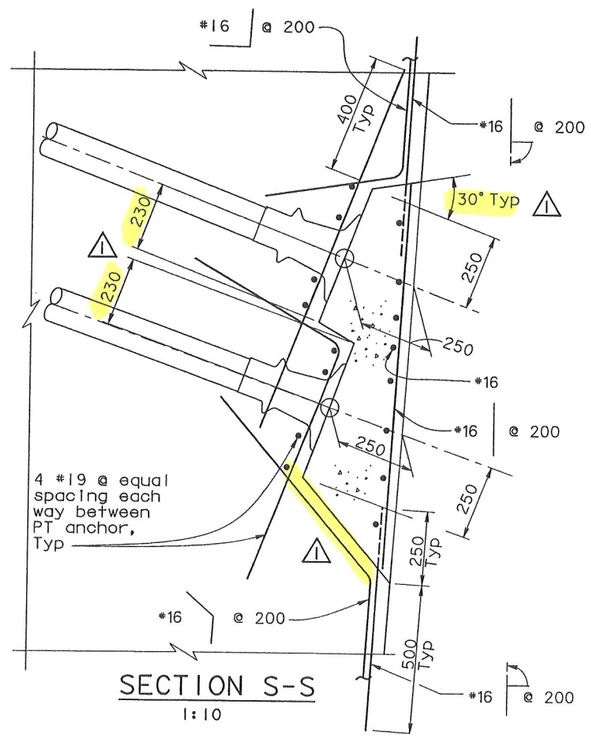

SECTION S-S
1:10

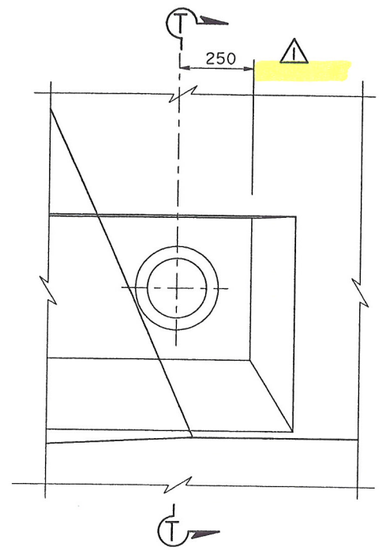

DETAIL Q
1:10

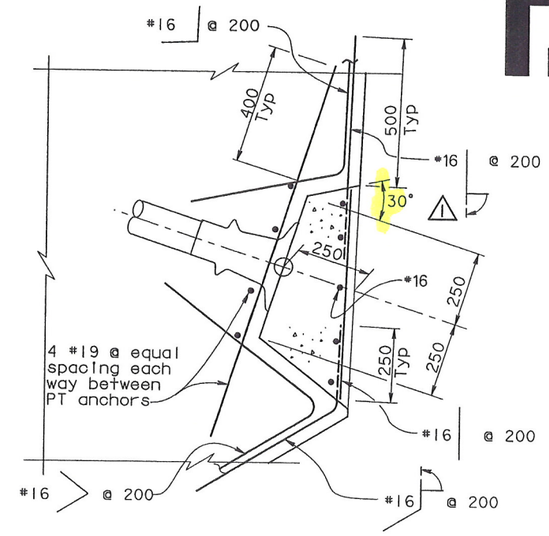

SECTION T-T
1:10

Caltrans Metric

DIST.	COUNTY	ROUTE	KILOMETER POST TOTAL PROJECT	SHEET NO.	TOTAL SHEETS
04	SF	80	13.2/13.9	505R1	1204

REGISTERED ENGINEER - CIVIL

12-6-04
PLANS APPROVAL DATE

REGISTERED PROFESSIONAL ENGINEER John Sun No. C 54648 Exp. 12/31/05 CIVIL STATE OF CALIFORNIA

The State of California or its officers or agents shall not be responsible for the accuracy or completeness of electronic copies of this plan sheet.

T.Y. LIN / MOFFATT & NICHOL
825 BATTERY STREET
SAN FRANCISCO, CA 94111

Caltrans now has a web site! To get to the web site, go to: http://www.dot.ca.gov

REGISTERED PROFESSIONAL ENGINEER James P. Duxbury No. C 64677 Exp. 06/30/07 CIVIL STATE OF CALIFORNIA

FOR REVISIONS ONLY

MARK	DATE	DESCRIPTIONS	BY	CH'D
1	07/21/06	W2 CAP BEAM ISD	JD	NV

REVISIONS

CONTRACT CHANGE ORDER NO. _____
SHEET ____ OF ____

NOTES:

1. For additional details, see "W2 Cap Beam Blockout Details No. 2" sheet.
2. Cap beam reinforcement not shown for clarity.
3. Local confining spiral reinforcement per tendon anchors shall be provided by PT tendon hardware supplier.
4. Blockouts on the cap beam south face shown, blockouts on the cap beam north face similar.

100 % PS&E

TIME PLOTTED => 10:03:47
DATE PLOTTED => 14 JUL 2006
USERNAME => vignatovsk

ALL DIMENSIONS ARE IN MILLIMETERS UNLESS OTHERWISE SHOWN

R. Valizadeh/V. Toan/Y. L./W. L./F. C.
DESIGN OVERSIGHT
SIGN OFF DATE 07/21/06
Rev. Date: 5-18-98

	BY	CHECKED
DESIGN	J. Sun	M. Chen
DETAILS	J. Duxbury	M. Chen
QUANTITIES	S. Shi	D. Harrison

PREPARED FOR THE STATE OF CALIFORNIA DEPARTMENT OF TRANSPORTATION

R. Manzanarez
PROJECT ENGINEER

BRIDGE NO. 34-0006L/R
KILOMETER POST 13.2/13.9

SAN FRANCISCO OAKLAND BAY BRIDGE
EAST SPAN SEISMIC SAFETY PROJECT
SELF-ANCHORED SUSPENSION BRIDGE
(SUPERSTRUCTURE & TOWER)

W2 CAP BEAM BLOCKOUT DETAILS NO. 8

ORIGINAL SCALE IN MILLIMETERS FOR REDUCED PLANS 0 10 20 30 40 50 60 70 80 90 100

CU 04
EA 0120F1

DISREGARD PRINTS BEARING EARLIER REVISION DATES → 05/31/01 04/08/02 07/01/02 12/19/02

SHEET 88R1 OF

FILE => p:\bb\04-0120f1\sas ready august 2005\cco#23\decbb08.dgn

DIST.	COUNTY	ROUTE	KILOMETER POST TOTAL PROJECT	SHEET NO.	TOTAL SHEETS
04	SF	80	13.2/13.9	506R1	1204

REGISTERED ENGINEER - CIVIL

12-6-04
PLANS APPROVAL DATE

REGISTERED PROFESSIONAL ENGINEER John Sun No. C 54648 Exp. 12/31/05 CIVIL STATE OF CALIFORNIA

The State of California or its officers or agents shall not be responsible for the accuracy or completeness of electronic copies of this plan sheet.

T.Y. LIN / MOFFATT & NICHOL
825 BATTERY STREET
SAN FRANCISCO, CA 94111

Caltrans now has a web site! To get to the web site, go to: http://www.dot.ca.gov

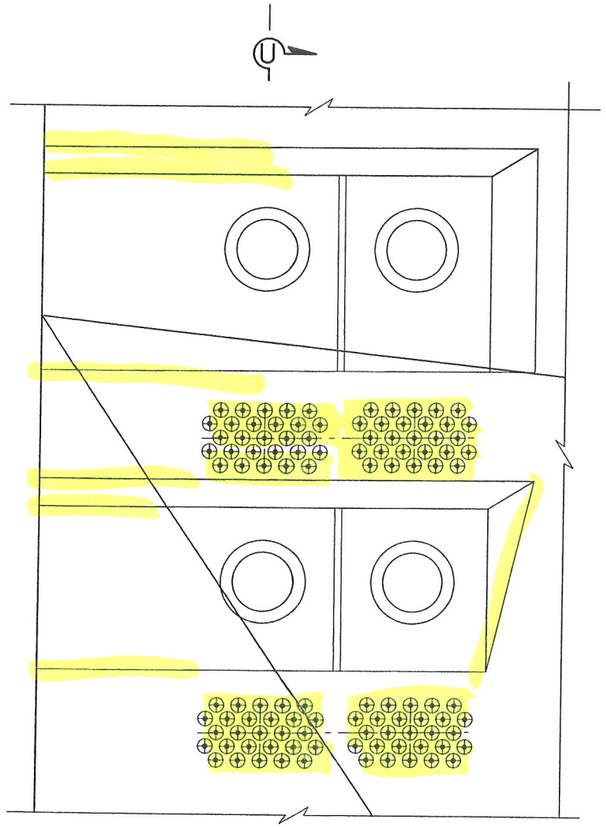

DETAIL R
1:10

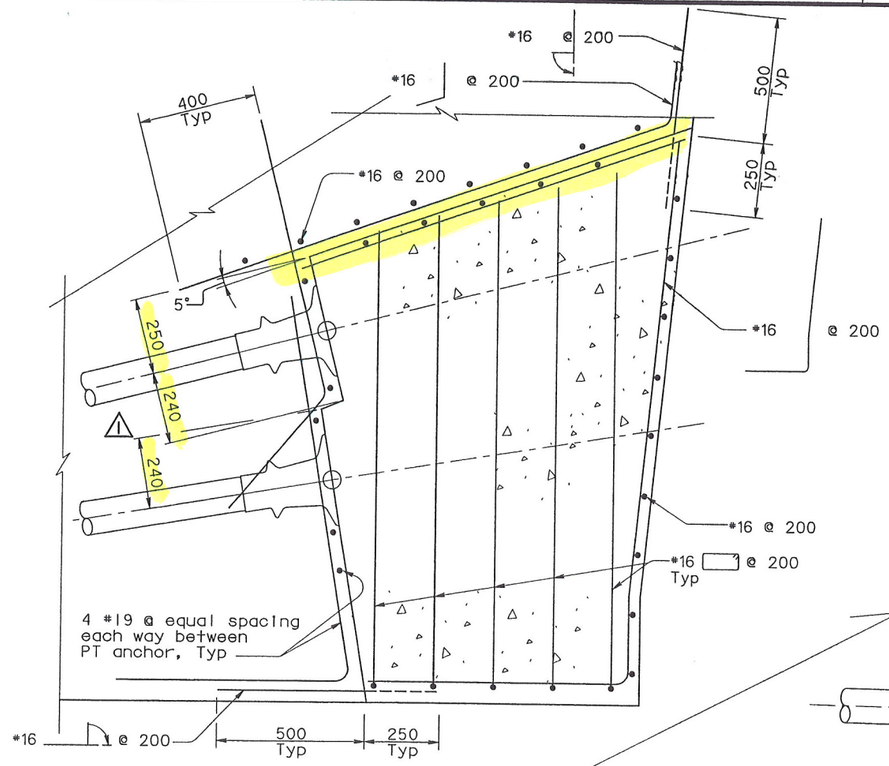

SECTION V-V
1:10

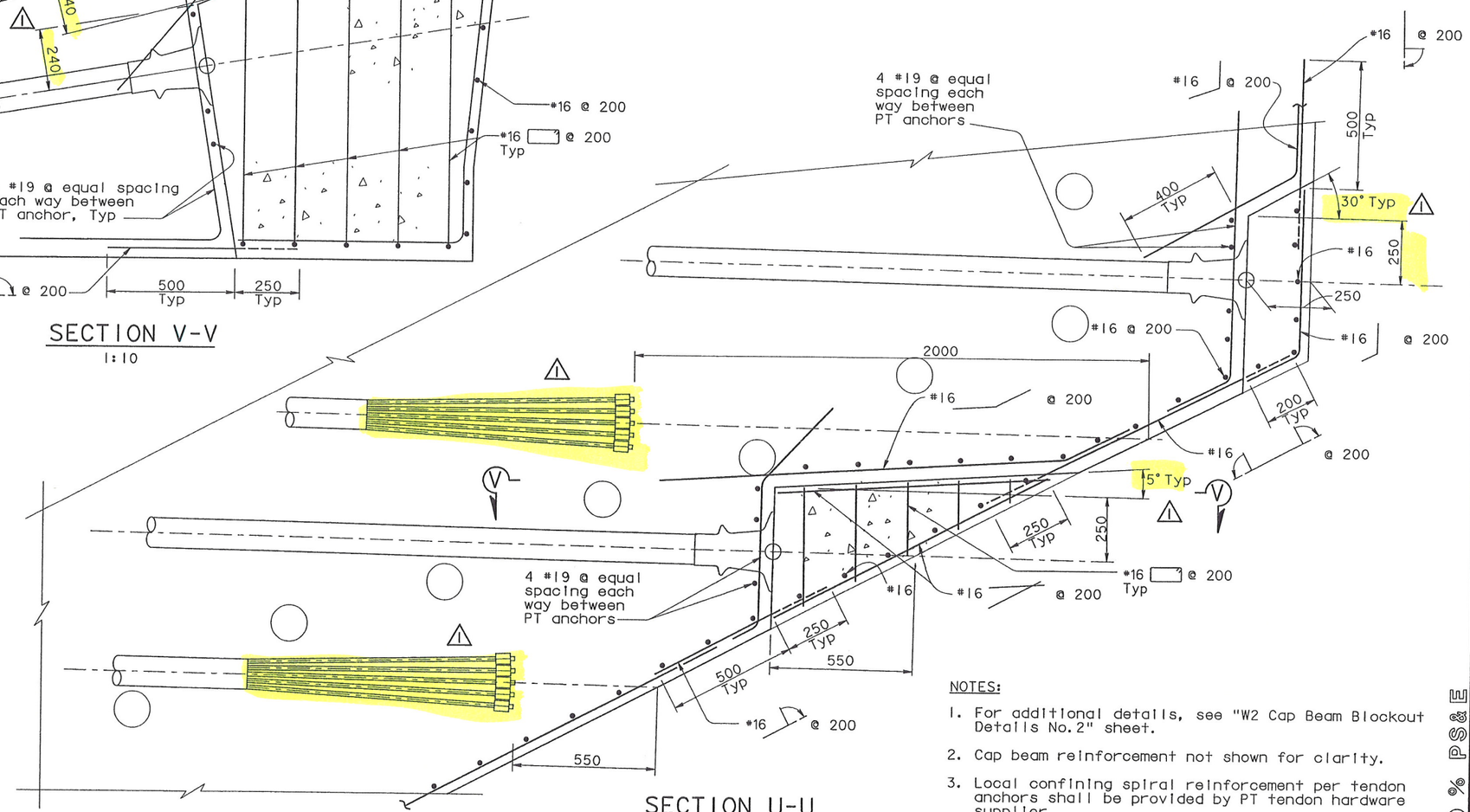

SECTION U-U
1:10

NOTES:

1. For additional details, see "W2 Cap Beam Blockout Details No.2" sheet.
2. Cap beam reinforcement not shown for clarity.
3. Local confining spiral reinforcement per tendon anchors shall be provided by PT tendon hardware supplier.

REGISTERED PROFESSIONAL ENGINEER Designed P. Duxbury No. C 64677 Exp. 06/30/07 CIVIL STATE OF CALIFORNIA

FOR REVISIONS ONLY

MARK	DATE	DESCRIPTIONS	BY	CH'D
1	07/21/06	W2 CAP BEAM ISD	JD	NV
		REVISIONS		

CONTRACT CHANGE ORDER NO. _____
SHEET ____ OF ____

ALL DIMENSIONS ARE IN MILLIMETERS UNLESS OTHERWISE SHOWN

R. Vallzadeh/V. Toan/Y.L./W.L./F.C.
DESIGN OVERSIGHT
SIGN OFF DATE 07/21/06

	BY	CHECKED
DESIGN	J. Sun	M. Chen
DETAILS	J. Duxbury	M. Chen
QUANTITIES	S. Shi	D. Harrison

PREPARED FOR THE STATE OF CALIFORNIA DEPARTMENT OF TRANSPORTATION

R. Manzanarez
PROJECT ENGINEER

BRIDGE NO. 34-0006L/R
KILOMETER POST 13.2/13.9

SAN FRANCISCO OAKLAND BAY BRIDGE
EAST SPAN SEISMIC SAFETY PROJECT
SELF-ANCHORED SUSPENSION BRIDGE
(SUPERSTRUCTURE & TOWER)

W2 CAP BEAM BLOCKOUT DETAILS NO. 9

Rev. Date: 5-18-98

ORIGINAL SCALE IN MILLIMETERS FOR REDUCED PLANS 0 10 20 30 40 50 60 70 80 90 100

CU 04
EA 0120F1

DISREGARD PRINTS BEARING EARLIER REVISION DATES

REVISION DATES (PRELIMINARY STAGE ONLY) 05/31/01 01/07/02 07/29/02 12/19/02

SHEET 89R1 OF

FILE => p:\bb\04-012001\sas readv august 2005\cco#23\aecbb09.dgn

100 % PS&E

USERNAME => vlgnctovs DATE PLOTTED => 14 JUL 2006 TIME PLOTTED => 10:04:35

DIST.	COUNTY	ROUTE	KILOMETER POST TOTAL PROJECT	SHEET NO.	TOTAL SHEETS
04	SF	80	13.2/13.9	507R1	1204

Caltrans Metric

REGISTERED ENGINEER - CIVIL

12-6-04
PLANS APPROVAL DATE

REGISTERED PROFESSIONAL ENGINEER John Sun No. C 54648 Exp. 12/31/05 CIVIL STATE OF CALIFORNIA

The State of California or its officers or agents shall not be responsible for the accuracy or completeness of electronic copies of this plan sheet.

T.Y. LIN / MOFFATT & NICHOL
825 BATTERY STREET
SAN FRANCISCO, CA 94111

Caltrans now has a web site! To get to the web site, go to: http://www.dot.ca.gov

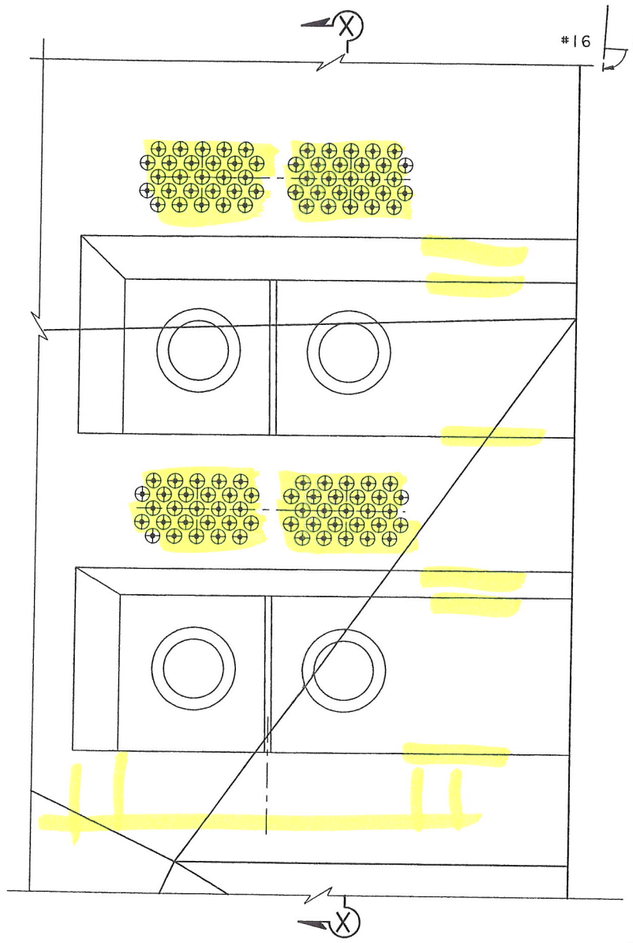

DETAIL S
1:10

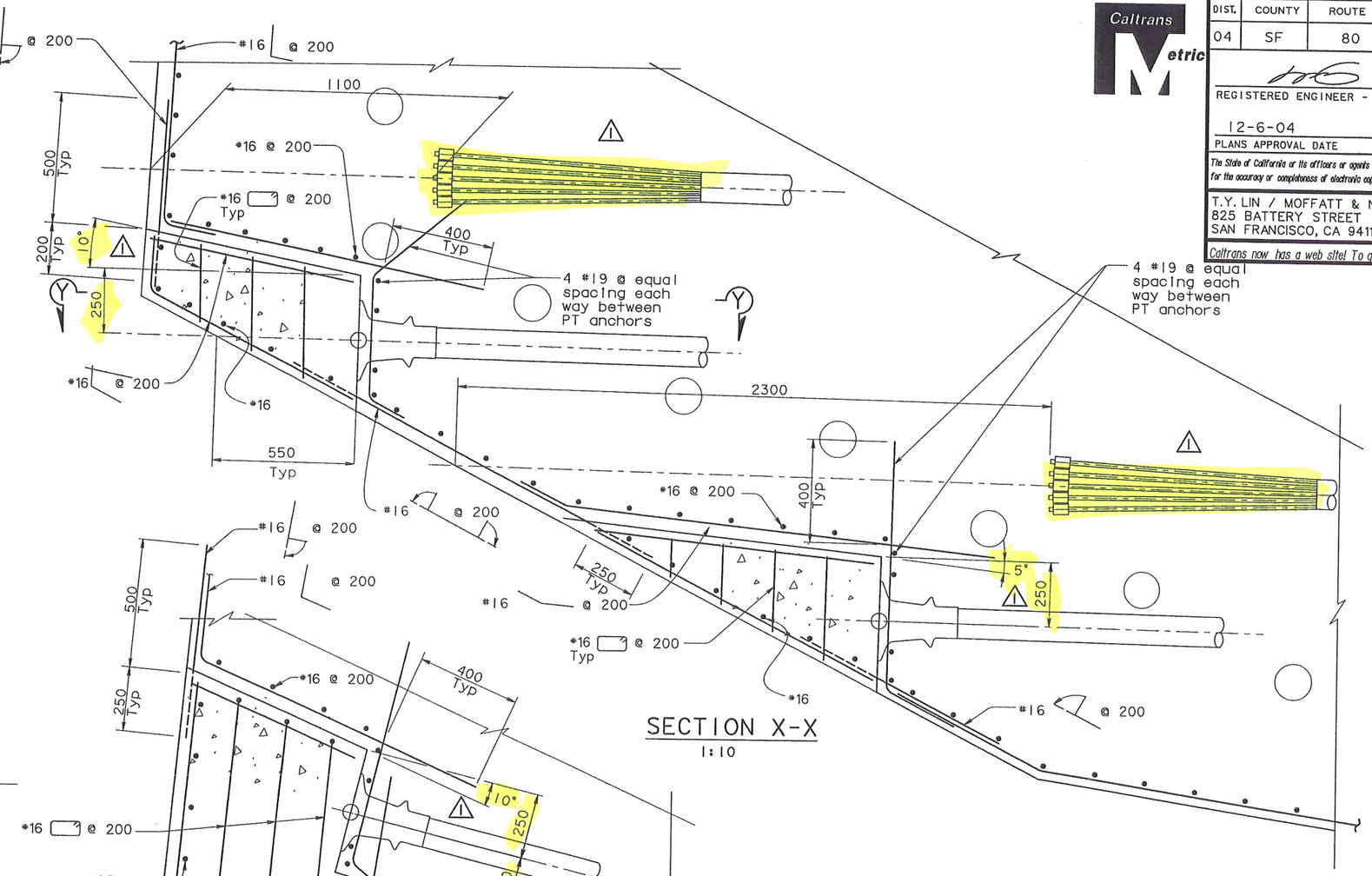

SECTION X-X
1:10

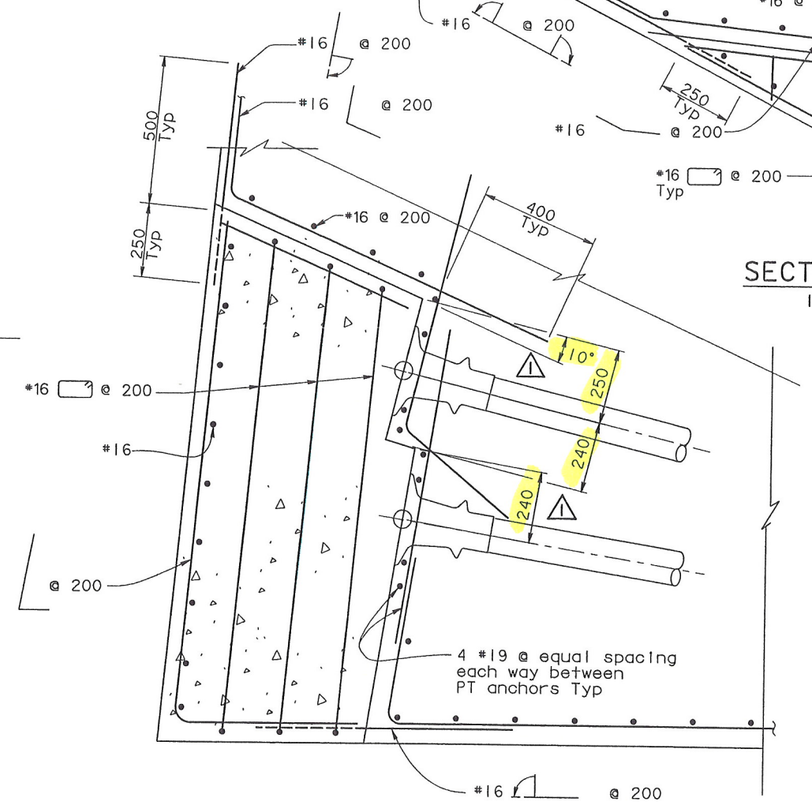

SECTION Y-Y
1:10

NOTES:

1. For additional details, see "W2 Cap Beam Blockout Details No. 2" sheet.
2. Cap beam reinforcement not shown for clarity.
3. Local confining spiral reinforcement per tendon anchors shall be provided by PT tendon hardware supplier.

REGISTERED PROFESSIONAL ENGINEER James P. Duxbury No. C 64677 Exp. 06/30/07 CIVIL STATE OF CALIFORNIA

FOR REVISIONS ONLY

MARK	DATE	DESCRIPTIONS	BY	CH'D
1	07/21/06	W2 CAP BEAM ISD	JD	NV
		REVISIONS		

CONTRACT CHANGE ORDER NO. _____
SHEET ____ OF ____

ALL DIMENSIONS ARE IN MILLIMETERS UNLESS OTHERWISE SHOWN

R. Valizadeh/V. Toan/Y.L./W.L./F.C.
DESIGN OVERSIGHT
Reza Valizadeh / Vang Toan / Y Liu
SIGN OFF DATE 07/21/06

Rev. Date: 5-18-98

DESIGN	BY J. Sun	CHECKED M. Chen	
DETAILS	BY J. Duxbury	CHECKED M. Chen	
QUANTITIES	BY S. Shi	CHECKED D. Harrison	

ORIGINAL SCALE IN MILLIMETERS FOR REDUCED PLANS 0 10 20 30 40 50 60 70 80 90 100

PREPARED FOR THE STATE OF CALIFORNIA DEPARTMENT OF TRANSPORTATION

R. Manzanarez
PROJECT ENGINEER

CU 04
EA 0120F1

BRIDGE NO. 34-0006L/R
KILOMETER POST 13.2/13.9

DISREGARD PRINTS BEARING EARLIER REVISION DATES

REVISION DATES (PRELIMINARY STAGE ONLY) 05/31/01 01/08/02 01/01/02 12/19/02

SHEET 90R1 OF

SAN FRANCISCO OAKLAND BAY BRIDGE
EAST SPAN SEISMIC SAFETY PROJECT
SELF-ANCHORED SUSPENSION BRIDGE
(SUPERSTRUCTURE & TOWER)

W2 CAP BEAM BLOCKOUT DETAILS NO. 10

FILE => p:\bb\04-012001\sas ready august 2005\cco#23\aecbb10.dgn

100% PS&E

USERNAME => vignatovsk DATE PLOTTED => 14 JUL 2006 TIME PLOTTED => 10:05:19

DIST.	COUNTY	ROUTE	KILOMETER POST TOTAL PROJECT	SHEET NO.	TOTAL SHEETS
04	SF	80	13.2/13.9	508R1	1204

REGISTERED ENGINEER - CIVIL

12-6-04
PLANS APPROVAL DATE

REGISTERED PROFESSIONAL ENGINEER John Sun No. C 54648 Exp. 12/31/05 CIVIL STATE OF CALIFORNIA

The State of California or its officers or agents shall not be responsible for the accuracy or completeness of electronic copies of this plan sheet.

T.Y. LIN / MOFFATT & NICHOL
825 BATTERY STREET
SAN FRANCISCO, CA 94111

Caltrans now has a web site! To get to the web site, go to: http://www.dot.ca.gov

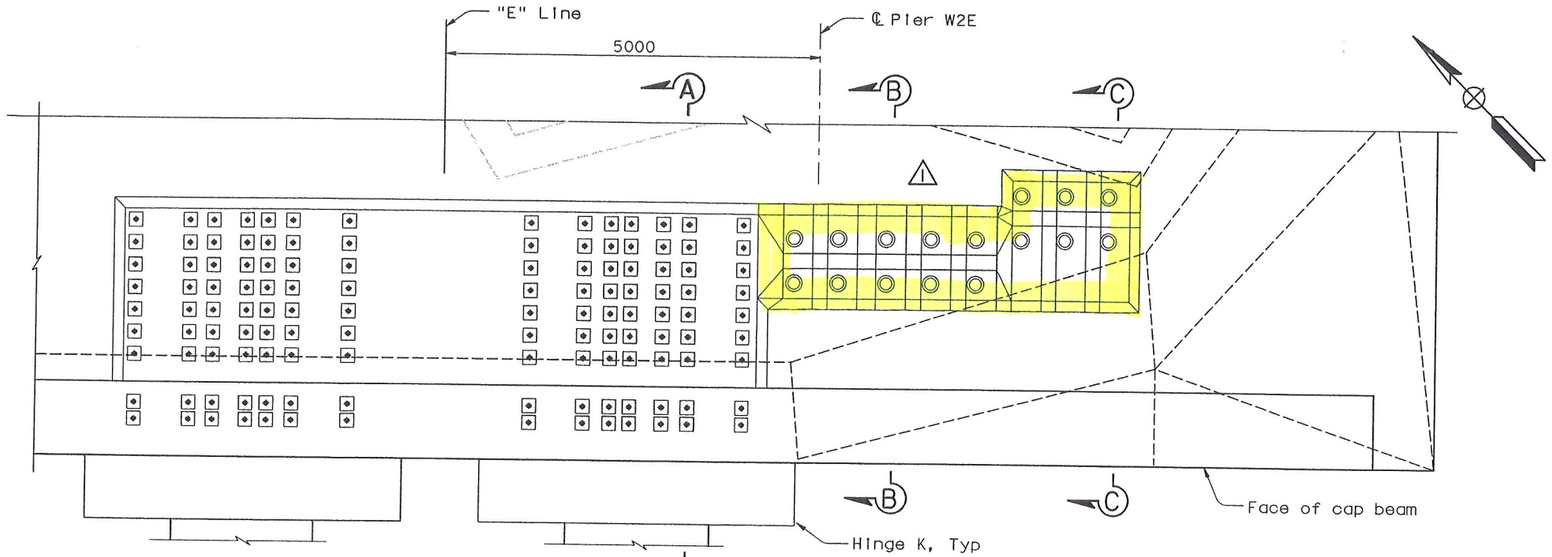

PLAN
1:40

(36 Dia post-tension rod and 12-15 Dia strand tendon blockouts)

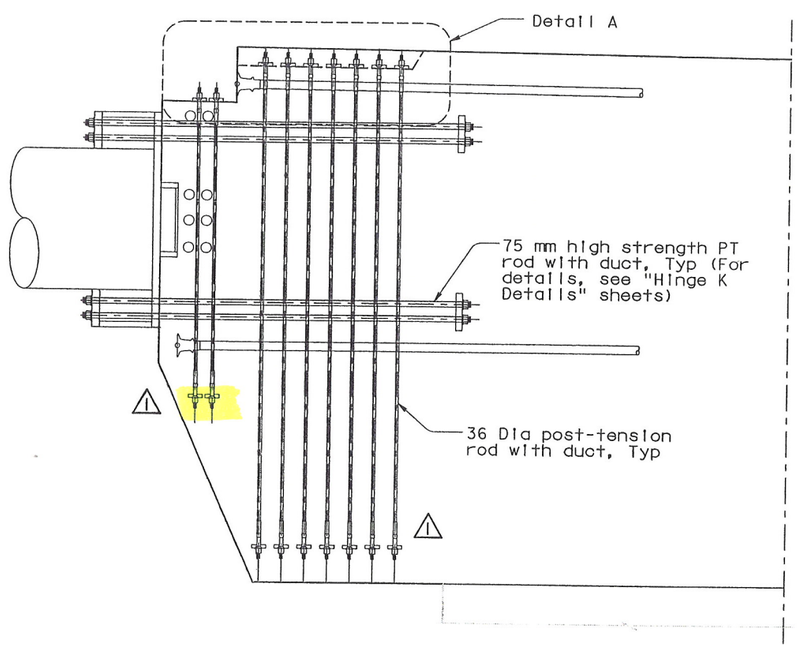

SECTION A-A
1:40

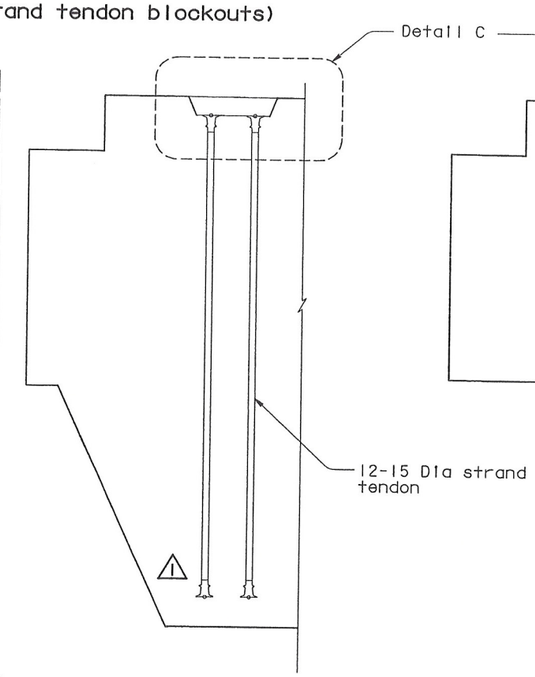

SECTION B-B
1:40

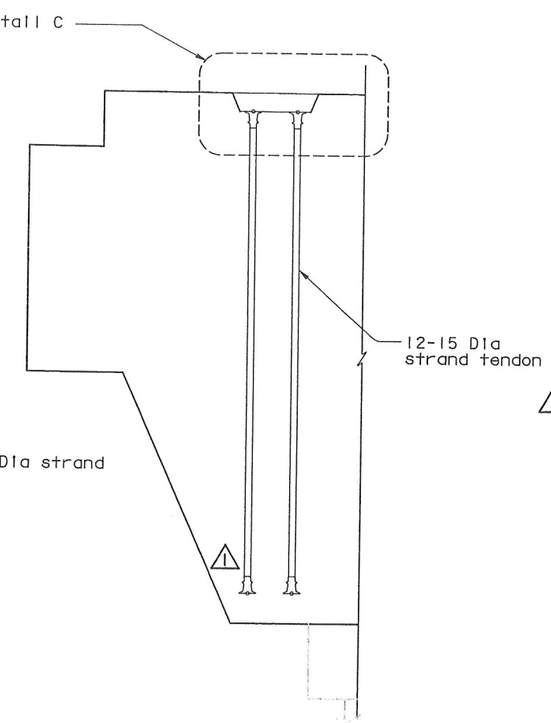

SECTION C-C
1:40

ALL DIMENSIONS ARE IN MILLIMETERS UNLESS OTHERWISE SHOWN

NOTES:

1. Cap beam reinforcement not shown for clarity.
2. Local confining spiral reinforcement for tendon anchors shall be provided by PT tendon hardware supplier.
3. Blockouts on the cap beam "E" Line shown, blockouts on the cap beam "W" Line similar.
4. For Details A and C, see "W2 Cap Beam Blockout Details No. 12" sheet.
5. For additional prestressing details, see "Prestressing Notes" sheet.

REGISTERED PROFESSIONAL ENGINEER James P. Duxbury No. C 64677 Exp. 06/30/07 CIVIL STATE OF CALIFORNIA

FOR REVISIONS ONLY

MARK	DATE	DESCRIPTIONS	BY	CH'D
1	07/21/06	W2 CAP BEAM ISD	JD	NV

REVISIONS

CONTRACT CHANGE ORDER NO. _____
SHEET ____ OF ____

100 % PS&E

R. Vallzadeh/V. Toan/Y.L./W.L./F.C.
DESIGN OVERSIGHT
SIGN OFF DATE 07/21/06
Rev. Date: 5-18-98

	BY	CHECKED
DESIGN	J. Sun	M. Chen
DETAILS	J. Duxbury	M. Chen
QUANTITIES	S. Shi	D. Harrison

PREPARED FOR THE STATE OF CALIFORNIA DEPARTMENT OF TRANSPORTATION

R. Manzanarez
PROJECT ENGINEER

BRIDGE NO. 34-0006L/R
KILOMETER POST 13.2/13.9

SAN FRANCISCO OAKLAND BAY BRIDGE
EAST SPAN SEISMIC SAFETY PROJECT
SELF-ANCHORED SUSPENSION BRIDGE
(SUPERSTRUCTURE & TOWER)

W2 CAP BEAM BLOCKOUT DETAILS NO. 11

ORIGINAL SCALE IN MILLIMETERS FOR REDUCED PLANS 0 10 20 30 40 50 60 70 80 90 100

CU 04
EA 0120F1

DISREGARD PRINTS BEARING EARLIER REVISION DATES

REVISION DATES (PRELIMINARY STAGE ONLY) 05/27/01 01/08/02 07/29/02 12/19/02

SHEET 91R1 OF

FILE => p:\bb\04-012001\sas readv august 2005\cco#23\aecbb11.dgn

USERNAME => vlgnatovs DATE PLOTTED => 14 JUL 2006 TIME PLOTTED => 09:56:39

DIST.	COUNTY	ROUTE	KILOMETER POST TOTAL PROJECT	SHEET NO.	TOTAL SHEETS
04	SF	80	13.2/13.9	509R1	1204

Caltrans Metric

REGISTERED ENGINEER - CIVIL

12-6-04

PLANS APPROVAL DATE

REGISTERED PROFESSIONAL ENGINEER John Sun No. C 54648 Exp. 12/31/05 CIVIL STATE OF CALIFORNIA

The State of California or its officers or agents shall not be responsible for the accuracy or completeness of electronic copies of this plan sheet.

T.Y. LIN / MOFFATT & NICHOL
825 BATTERY STREET
SAN FRANCISCO, CA 94111

Caltrans now has a web site! To get to the web site, go to: http://www.dot.ca.gov

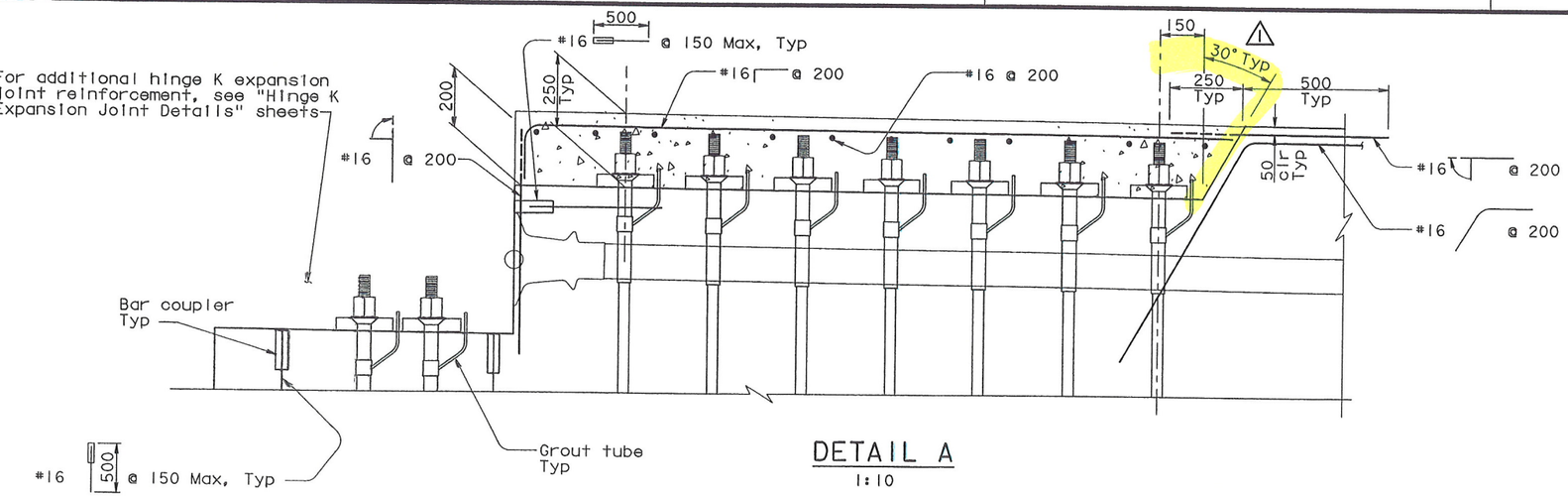

DETAIL A
1:10

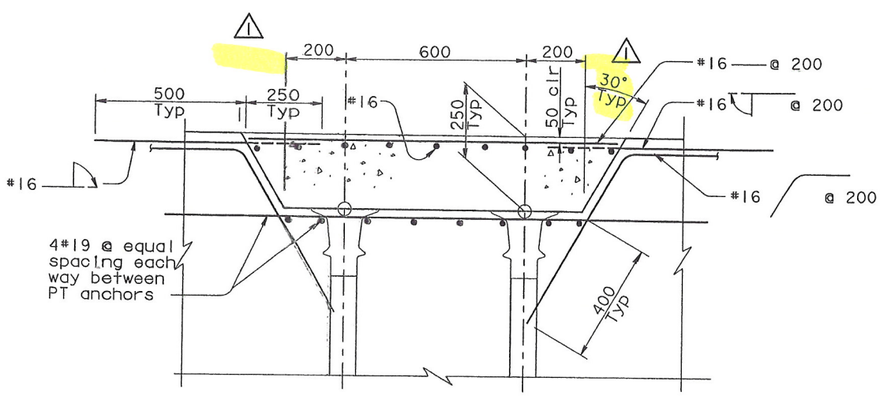

DETAIL C
1:10

NOTES:

1. For additional details, see "W2 Cap Beam Blockout Details No. 11" sheet.
2. Cap beam reinforcement not shown for clarity.
3. Local confining spiral reinforcement per tendon anchors shall be provided by PT tendon hardware supplier.

REGISTERED PROFESSIONAL ENGINEER James P. Duxbury No. C 64677 Exp. 06/30/07 CIVIL STATE OF CALIFORNIA

FOR REVISIONS ONLY

MARK	DATE	DESCRIPTIONS	BY	CH'D
1	07/21/06	W2 CAP BEAM ISD	JD	NV

REVISIONS

CONTRACT CHANGE ORDER NO. _____
SHEET ____ OF ____

100 % PS&E

ALL DIMENSIONS ARE IN MILLIMETERS UNLESS OTHERWISE SHOWN

R. Vallzadeh/V. Toan/Y.L./W.L./F.C.
DESIGN OVERSIGHT
SIGN OFF DATE 07/21/06
Rev. Date: 5-18-98

	BY	CHECKED
DESIGN	J. Sun	M. Chen
DETAILS	J. Duxbury	M. Chen
QUANTITIES	S. Shi	D. Harrison

PREPARED FOR THE STATE OF CALIFORNIA DEPARTMENT OF TRANSPORTATION

R. Manzanarez
PROJECT ENGINEER

BRIDGE NO. 34-0006L/R
KILOMETER POST 13.2/13.9

SAN FRANCISCO OAKLAND BAY BRIDGE
EAST SPAN SEISMIC SAFETY PROJECT
SELF-ANCHORED SUSPENSION BRIDGE
(SUPERSTRUCTURE & TOWER)

W2 CAP BEAM BLOCKOUT DETAILS NO. 12

ORIGINAL SCALE IN MILLIMETERS FOR REDUCED PLANS 0 10 20 30 40 50 60 70 80 90 100

CU 04
EA 0120F1

DISREGARD PRINTS BEARING EARLIER REVISION DATES

REVISION DATES (PRELIMINARY STAGE ONLY) 05/21/01 01/08/02 07/08/02 12/19/02

SHEET 92R1 OF

FILE => p:\bb\04-012001\sas readv august 2005\oco#23\aecbb12.dgn

USERNAME => vignatovsk DATE PLOTTED => 14 JUL 2006 TIME PLOTTED => 09:57:38

DIST.	COUNTY	ROUTE	KILOMETER POST TOTAL PROJECT	SHEET NO.	TOTAL SHEETS
04	SF	80	13.2/13.9	520R1	1204

REGISTERED ENGINEER - CIVIL

12-6-04
PLANS APPROVAL DATE

REGISTERED PROFESSIONAL ENGINEER John Sun No. C 54648 Exp. 12/31/05 CIVIL STATE OF CALIFORNIA

The State of California or its officers or agents shall not be responsible for the accuracy or completeness of electronic copies of this plan sheet.

T.Y. LIN / MOFFATT & NICHOL
825 BATTERY STREET
SAN FRANCISCO, CA 94111

Caltrans now has a web site! To get to the web site, go to: http://www.dot.ca.gov

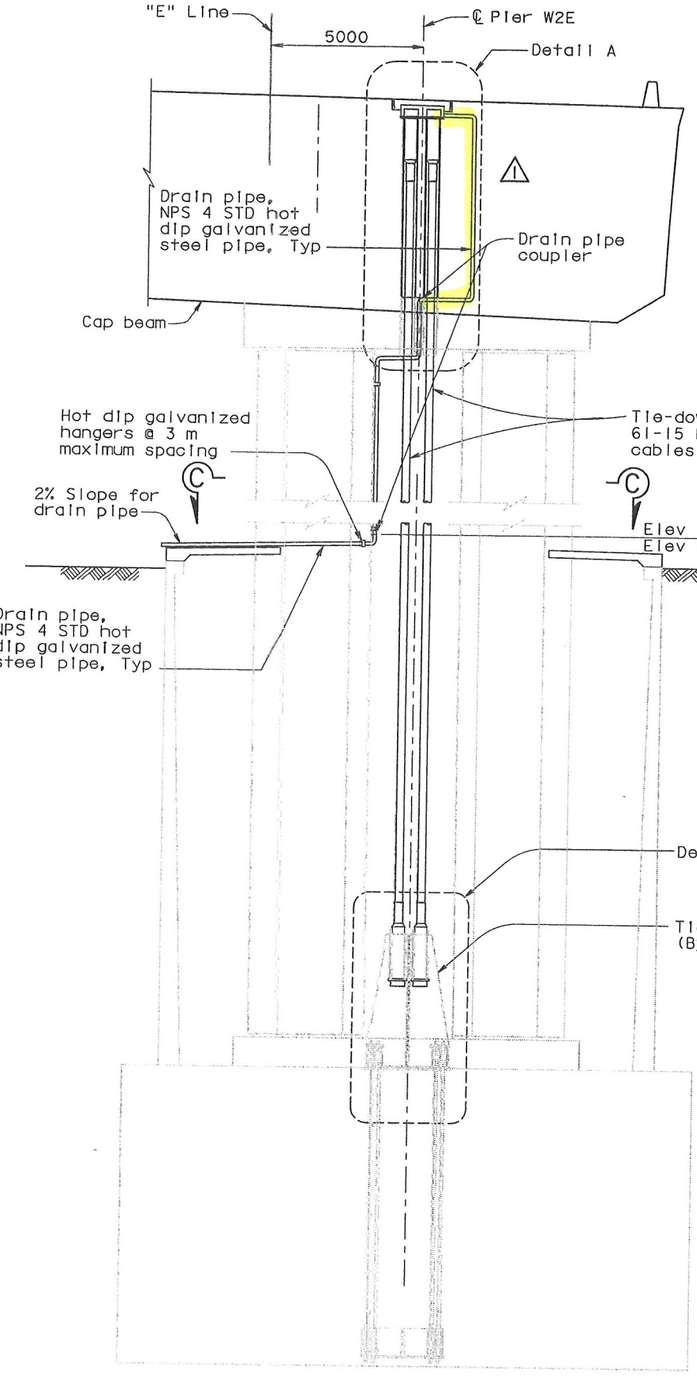

SECTION A-A
1:100

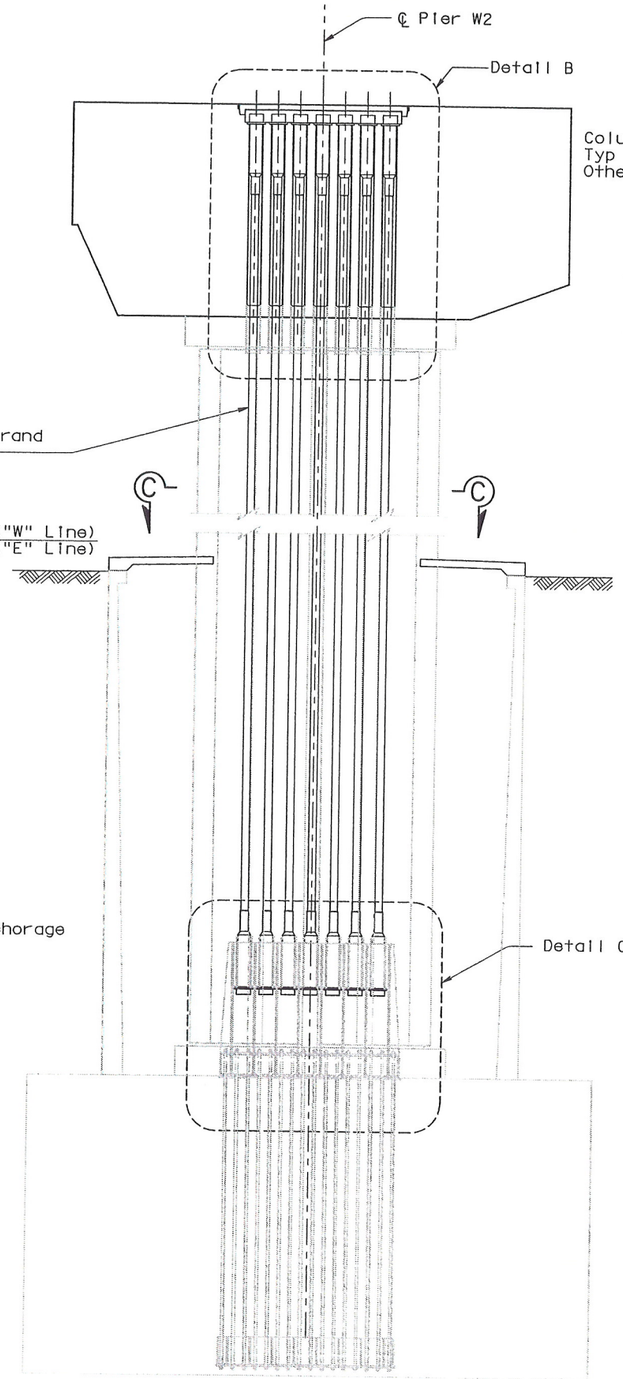

SECTION B-B
1:100

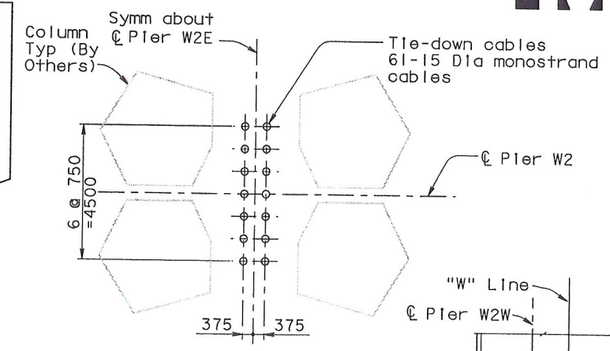

SECTION C-C
1:100

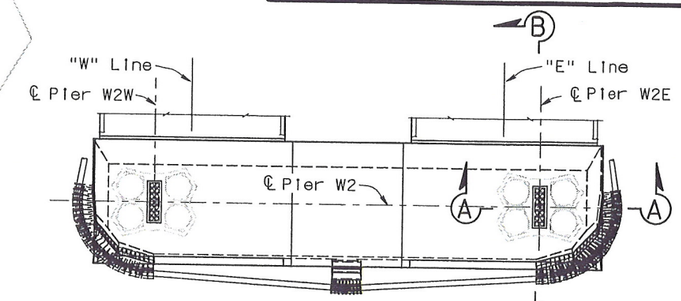

KEY PLAN
1:400

PROFESSIONAL ENGINEER James P. Duxbury No. C 64677 Exp. 06/30/07 CIVIL STATE OF CALIFORNIA

FOR REVISIONS ONLY

MARK	DATE	DESCRIPTIONS	BY	CH'D
1	07/21/06	W2 CAP BEAM ISD	JD	NV

REVISIONS

CONTRACT CHANGE ORDER NO. _____
SHEET ____ OF ____

NOTES:

1. Tie-down cables shall be of ASTM A416 Grade 270 (fu=1860 MPa) seven wire, low relaxation monostrands, unless specified otherwise.
2. For Details A and B, see "Cable Tie-Down Details No. 3" sheet.
3. For Details C and D, see "Cable Tie-Down Details No. 4" sheet.
4. For additional prestressing details, see "Prestressing Notes" sheet.
5. For general stressing sequence, see "Pier W2 Construction Sequence" sheet.
6. Jacking force in the tie-down cables shall be 8570 kN typical.
7. For tie-down cable details, see "Cable Tie-Down Details No. 2" sheet.
8. For "Cable Tie-Down Details" sheets, the Contractor shall verify all controlling field dimensions before ordering or fabricating any material.

ALL DIMENSIONS ARE IN MILLIMETERS UNLESS OTHERWISE SHOWN

100 % PS&E

TIME PLOTTED => 10:06:15
DATE PLOTTED => 14 JUL 2006
USERNAME => vignatovski

R. Vallizadeh/V. Toan/Y.L./W.L./F.C.
DESIGN OVERSIGHT
SIGN OFF DATE 07/21/06
Rev. Date: 5-18-98

	BY	CHECKED
DESIGN	J. Sun	J. Straski
DETAILS	S. Shi	J. Straski
QUANTITIES	J. Duxbury	S. Shi

PREPARED FOR THE STATE OF CALIFORNIA DEPARTMENT OF TRANSPORTATION

R. Manzanarez
PROJECT ENGINEER

BRIDGE NO. 34-0006L/R
KILOMETER POST 13.2/13.9

SAN FRANCISCO OAKLAND BAY BRIDGE
EAST SPAN SEISMIC SAFETY PROJECT
SELF-ANCHORED SUSPENSION BRIDGE
(SUPERSTRUCTURE & TOWER)

CABLE TIE-DOWN DETAILS NO. 1

ORIGINAL SCALE IN MILLIMETERS FOR REDUCED PLANS 0 10 20 30 40 50 60 70 80 90 100

CU 04
EA 0120F1

DISREGARD PRINTS BEARING EARLIER REVISION DATES

REVISION DATES (PRELIMINARY STAGE ONLY) 05/25/99 08/06/99 05/24/01 04/08/02 07/24/02 12/19/02

SHEET 103R1 OF

FILE => p:\bb\04-012001\sas readv august 2005\cco#23\aeptd01.dgn

DIST.	COUNTY	ROUTE	KILOMETER POST TOTAL PROJECT	SHEET NO.	TOTAL SHEETS
04	SF	80	13.2/13.9	522R1	1204

REGISTERED ENGINEER - CIVIL

12-6-04
PLANS APPROVAL DATE

REGISTERED PROFESSIONAL ENGINEER John Sun No. C 54648 Exp. 12/31/05 CIVIL STATE OF CALIFORNIA

The State of California or its officers or agents shall not be responsible for the accuracy or completeness of electronic copies of this plan sheet.

T.Y. LIN / MOFFATT & NICHOL
825 BATTERY STREET
SAN FRANCISCO, CA 94111

Caltrans now has a web site! To get to the web site, go to: http://www.dot.ca.gov

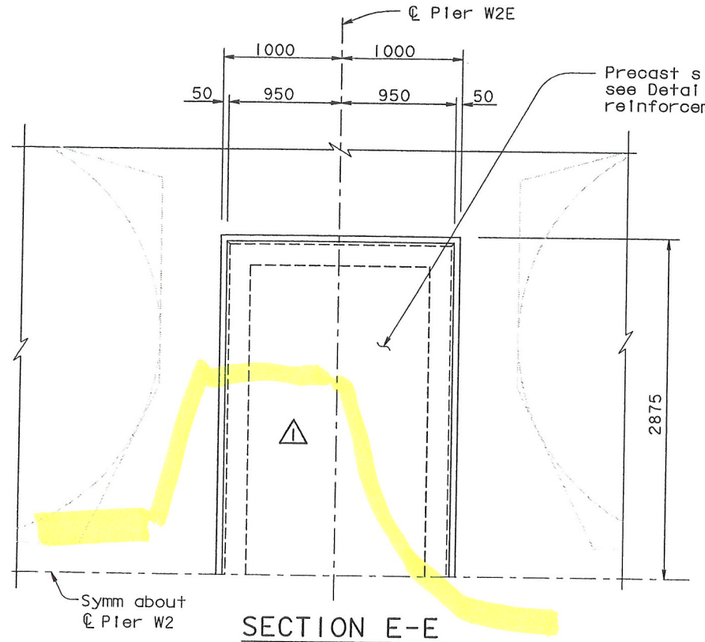

SECTION E-E
1:25

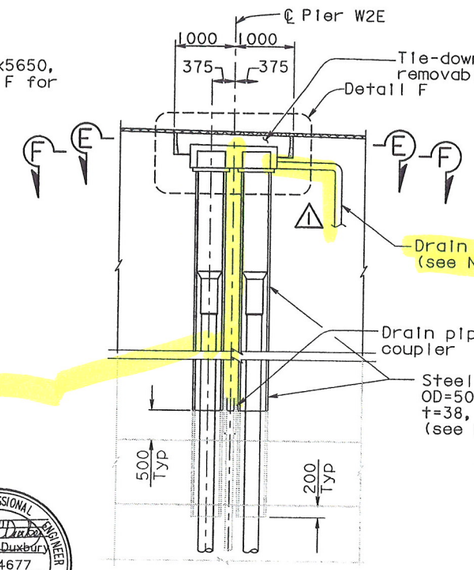

DETAIL A
1:50

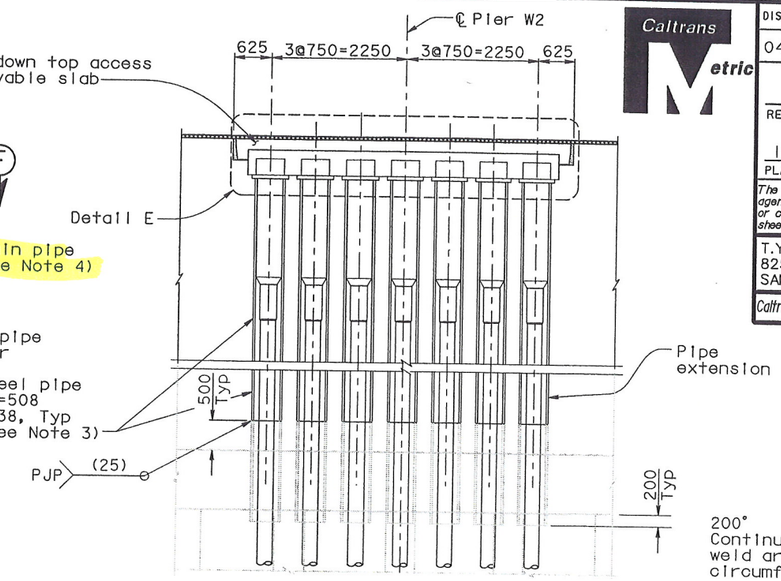

DETAIL B
1:50

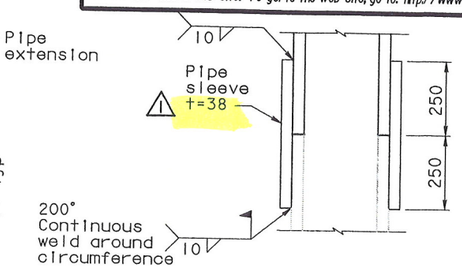

ALTERNATE CONNECTION FOR STEEL PIPE
1:10

FOR REVISIONS ONLY

MARK	DATE	DESCRIPTIONS	BY	CH'D
1	07/21/06	W2 CAP BEAM ISD	JD	NV

REVISIONS

CONTRACT CHANGE ORDER NO. ____
SHEET ____ OF ____

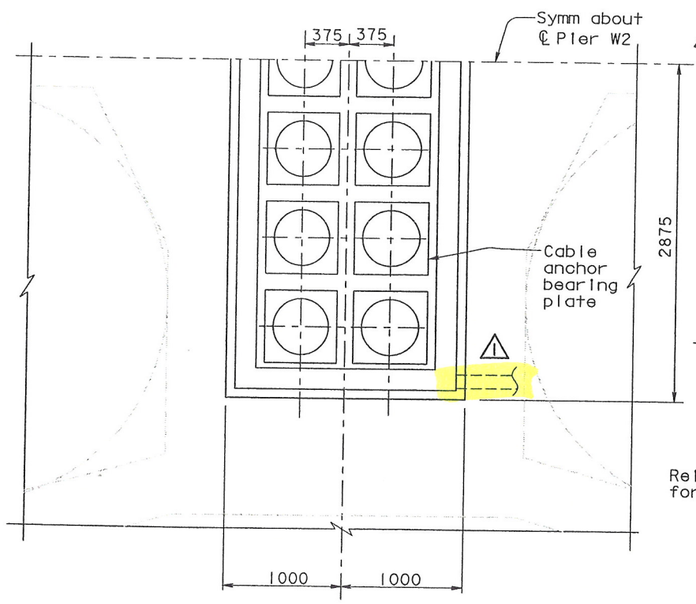

SECTION F-F
1:25

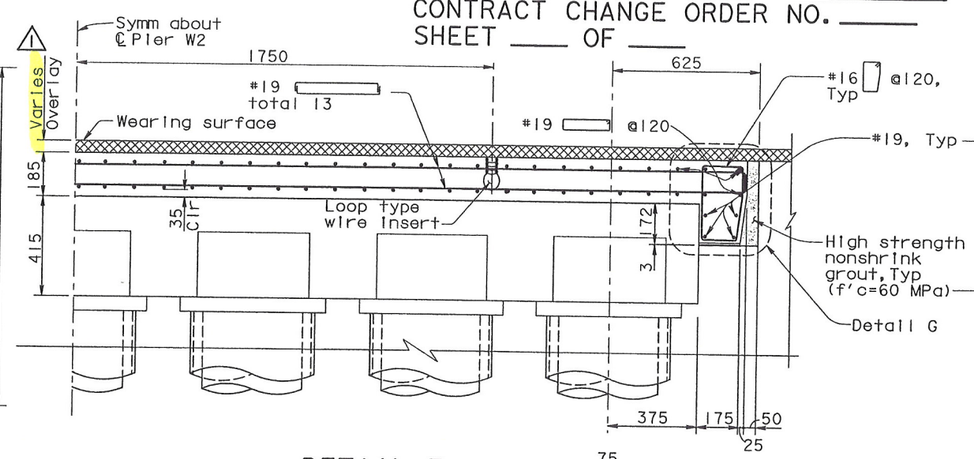

DETAIL E
1:12.5

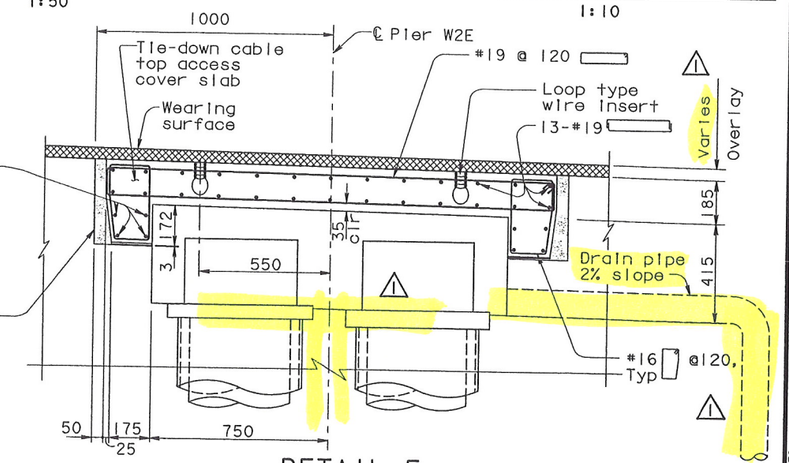

DETAIL F
1:12.5

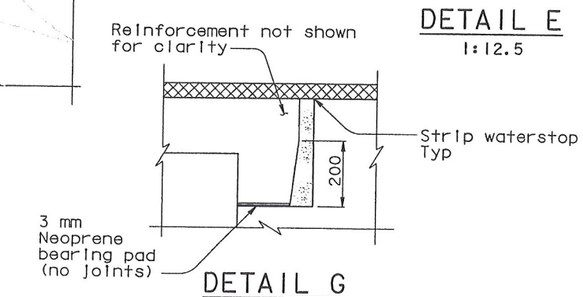

DETAIL G
1:10

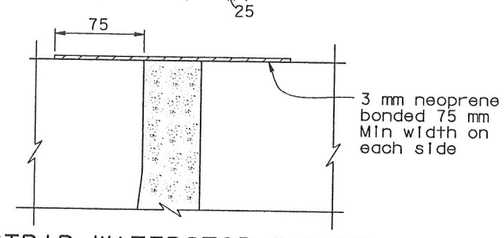

STRIP WATERSTOP DETAIL
1:2.5

NOTES:

1. For additional details, see "Cable Tie-down Details No.1" sheet.
2. Concrete for the precast slab should be f'c=60 MPa at 28 days.
3. Steel pipe shall be ASTM A709 M Grade 345 unless specified otherwise.
4. Drain pipe shall be spliced to the drain pipe provided by the Self-Anchored Suspension Bridge (W2) Contract (by Others). Drain shall be placed at the low point of the tie-down access. The Contractor may adjust location of the drain inlet to accommodate reinforcement and cap beam postensioning.

ALL DIMENSIONS ARE IN MILLIMETERS UNLESS OTHERWISE SHOWN

R. Vallizadeh/V. Toan/Y. L./W. L./F. C.
DESIGN OVERSIGHT
SIGN OFF DATE 07/21/06
Rev. Date: 5-18-98

DESIGN	BY J. Sun	CHECKED J. Straskl	
DETAILS	BY S. Shi	CHECKED J. Straskl	
QUANTITIES	BY J. Duxbury	CHECKED S. Shi	

PREPARED FOR THE STATE OF CALIFORNIA DEPARTMENT OF TRANSPORTATION

R. Manzanarez
PROJECT ENGINEER

BRIDGE NO. 34-0006L/R
KILOMETER POST 13.2/13.9

SAN FRANCISCO OAKLAND BAY BRIDGE
EAST SPAN SEISMIC SAFETY PROJECT
SELF-ANCHORED SUSPENSION BRIDGE
(SUPERSTRUCTURE & TOWER)

CABLE TIE-DOWN DETAILS NO. 3

ORIGINAL SCALE IN MILLIMETERS FOR REDUCED PLANS 0 10 20 30 40 50 60 70 80 90 100

CU 04
EA 0120F1

DISREGARD PRINTS BEARING EARLIER REVISION DATES
REVISION DATES (PRELIMINARY STAGE ONLY) 05/28/99 08/06/99 05/24/01 04/08/02 07/24/02 12/18/02 12/07/05

SHEET 105R1 OF

FILE => p:\bb\04-012001\sas readv august 2005\cco#23\aeptd03.dgn

100 % PS&E

USERNAME => vignatovs DATE PLOTTED => 14 JUL 2006 TIME PLOTTED => 10:08:18

DIST.	COUNTY	ROUTE	KILOMETER POST TOTAL PROJECT	SHEET NO.	TOTAL SHEETS
04	SF	80	13.2/13.9	773R1	1204

REGISTERED ENGINEER - CIVIL

12-6-04
PLANS APPROVAL DATE

REGISTERED PROFESSIONAL ENGINEER John Sun No. C 54648 Exp. 12/31/05 CIVIL STATE OF CALIFORNIA

The State of California or its officers or agents shall not be responsible for the accuracy or completeness of electronic copies of this plan sheet.

T.Y. LIN / MOFFATT & NICHOL
825 BATTERY STREET
SAN FRANCISCO, CA 94111

To get to the web site, go to: http://www.dot.ca.gov

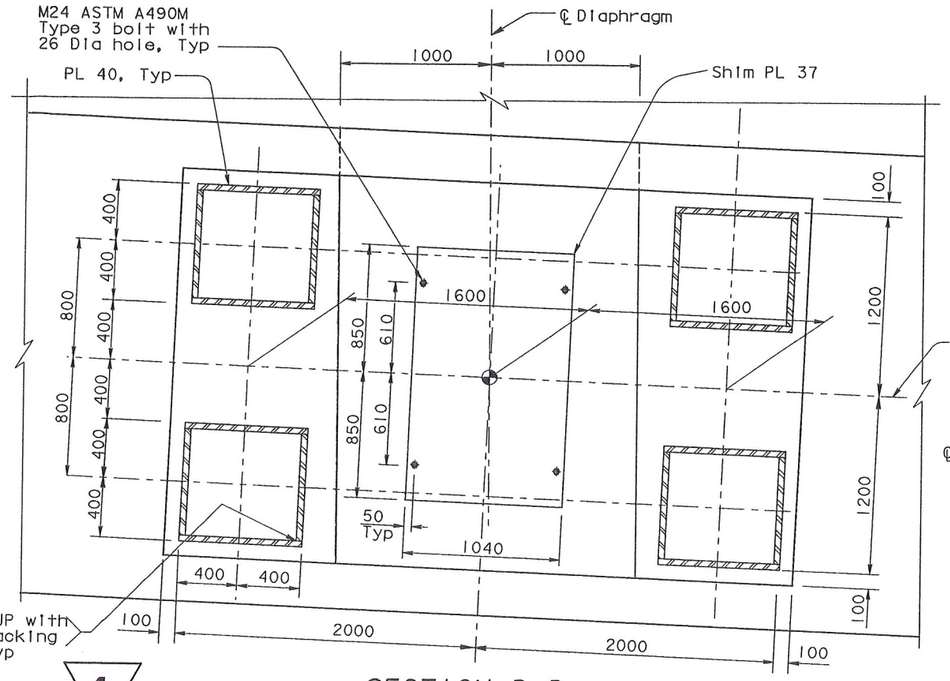

SECTION D-D
1:20

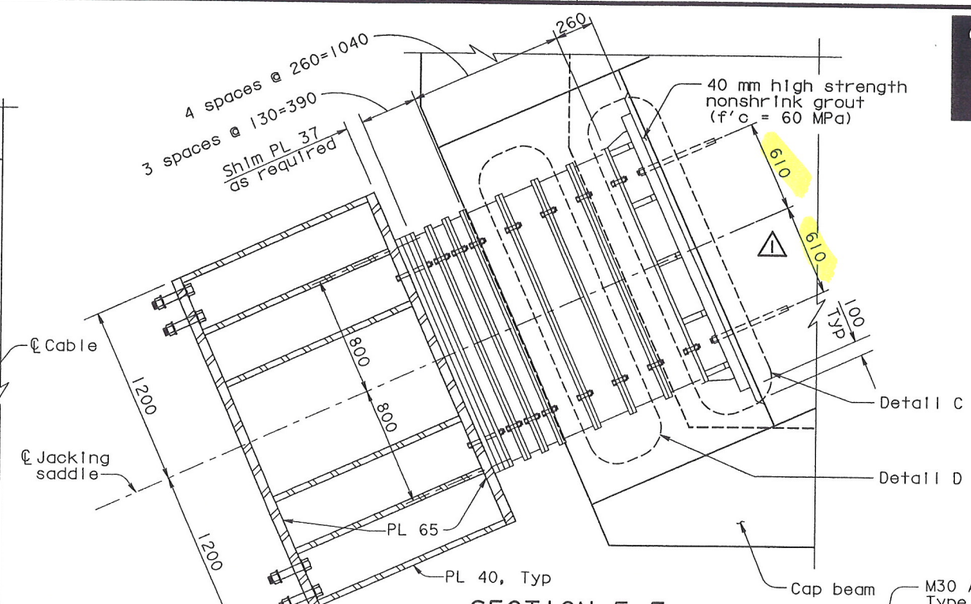

SECTION F-F
1:20

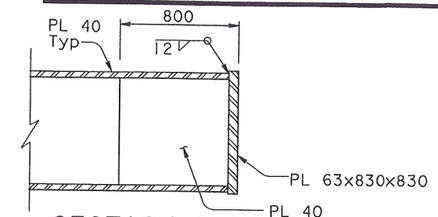

SECTION G-G
1:20

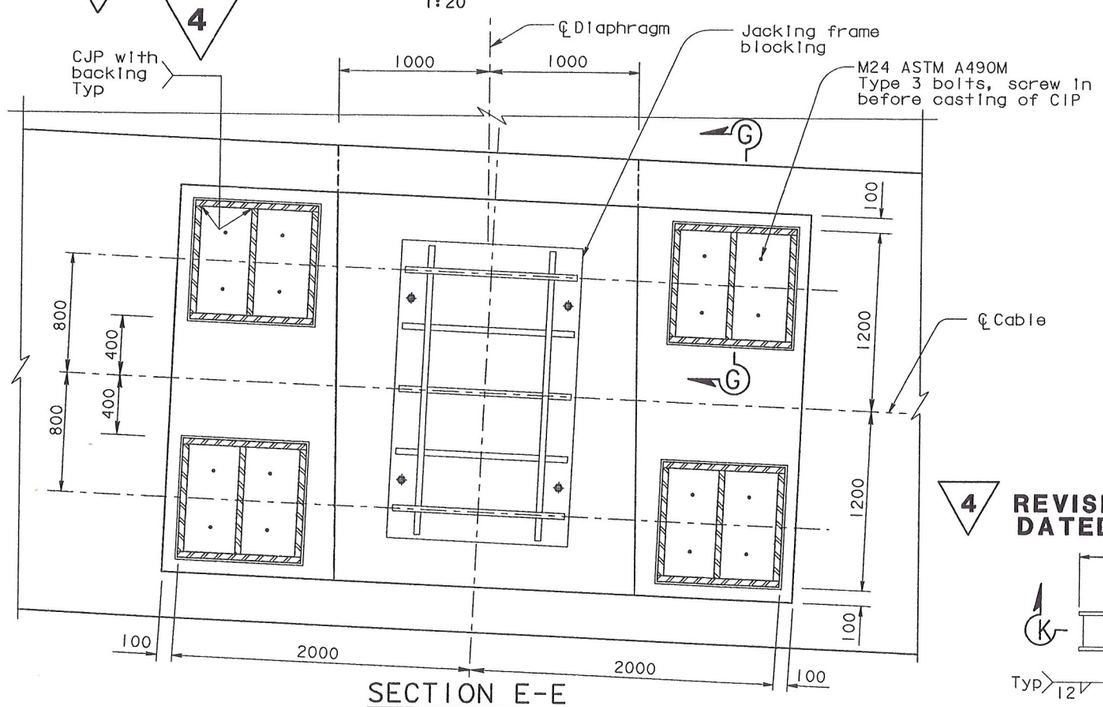

SECTION E-E
1:20

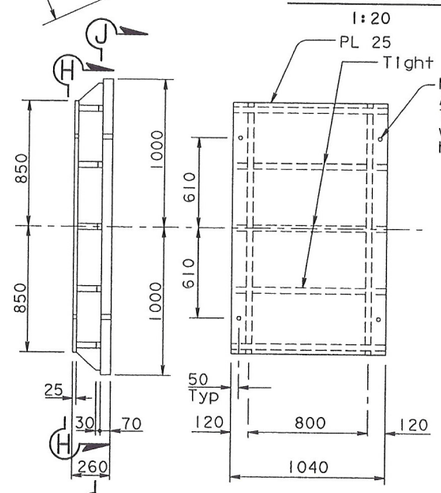

DETAIL C
1:20

SECTION H-H
1:20

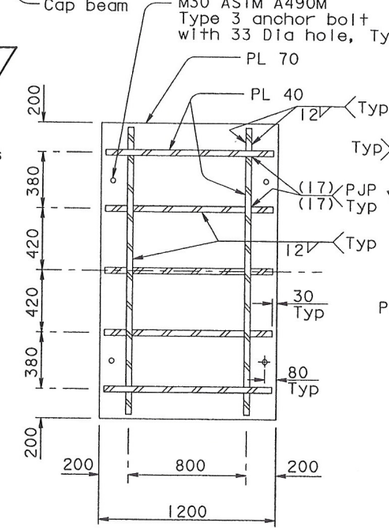

SECTION J-J
1:20

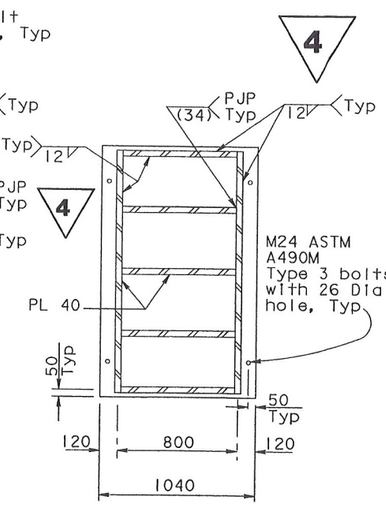

SECTION K-K
1:20

4 **REVISED PER ADDENDUM NO. 4 DATED DECEMBER 9, 2005**

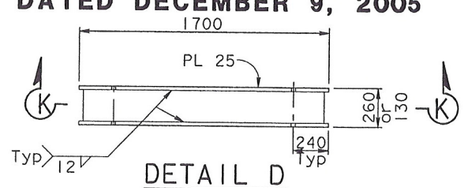

DETAIL D
1:20

REGISTERED PROFESSIONAL ENGINEER James P. Duxbury No. C 64677 Exp. 06/30/07 CIVIL STATE OF CALIFORNIA

MARK	DATE	DESCRIPTIONS	BY	CH'D
1	07/21/06	W2 CAP BEAM ISD	JD	NV

REVISIONS

CONTRACT CHANGE ORDER NO. _____
SHEET ____ OF ____

FOR REVISIONS ONLY

NOTES:

1. For additional details, see "West Jacking Frame Details No.1" sheet.

ALL DIMENSIONS ARE IN MILLIMETERS UNLESS OTHERWISE SHOWN

R. Valizadeh/V. Toan/Y.L./W.L./F.C.
DESIGN OVERSIGHT
SIGN OFF DATE 07/21/06

Rev. Date 5-18-98

	BY	CHECKED
DESIGN	J. Sun	T. McMeans
DETAILS	J. Duxbury	T. McMeans
QUANTITIES	J. Duxbury	S. Shi

ORIGINAL SCALE IN MILLIMETERS FOR REDUCED PLANS 0 10 20 30 40 50 60 70 80 90 100

PREPARED FOR THE STATE OF CALIFORNIA DEPARTMENT OF TRANSPORTATION

R. Manzanarez
PROJECT ENGINEER

CU 04
EA 0120F1

BRIDGE NO. 34-0006L/R
KILOMETER POST 13.2/13.9

DISREGARD PRINTS BEARING EARLIER REVISION DATES

REVISION DATES (PRELIMINARY STAGE ONLY) 08/08/99 05/31/01 03/08/02 03/04/02 12/18/02 11/13/05

SHEET 356R1 OF

SAN FRANCISCO OAKLAND BAY BRIDGE
EAST SPAN SEISMIC SAFETY PROJECT
SELF-ANCHORED SUSPENSION BRIDGE
(SUPERSTRUCTURE & TOWER)

WEST JACKING FRAME DETAILS NO. 2

FILE => p:\bb\04-012001\sas readv august 2005\cco#23\agsdd04d.dgn

100 % PS&E

USERNAME => vignatovs DATE PLOTTED => 14 JUL 2006 TIME PLOTTED => 10:09:18

DIST.	COUNTY	ROUTE	KILOMETER POST TOTAL PROJECT	SHEET NO.	TOTAL SHEETS
04	SF	80	13.2/13.9	905R1	1204

REGISTERED ENGINEER - CIVIL

12-6-04

PLANS APPROVAL DATE

REGISTERED PROFESSIONAL ENGINEER Tien Hung Ho No. C 43990 Exp. 06/30/07 CIVIL STATE OF CALIFORNIA

The State of California or its officers or agents shall not be responsible for the accuracy or completeness of electronic copies of this plan sheet.

T.Y. LIN / MOFFATT & NICHOL
825 BATTERY STREET
SAN FRANCISCO, CA 94111

To get to the web site, go to: http://www.dot.ca.gov

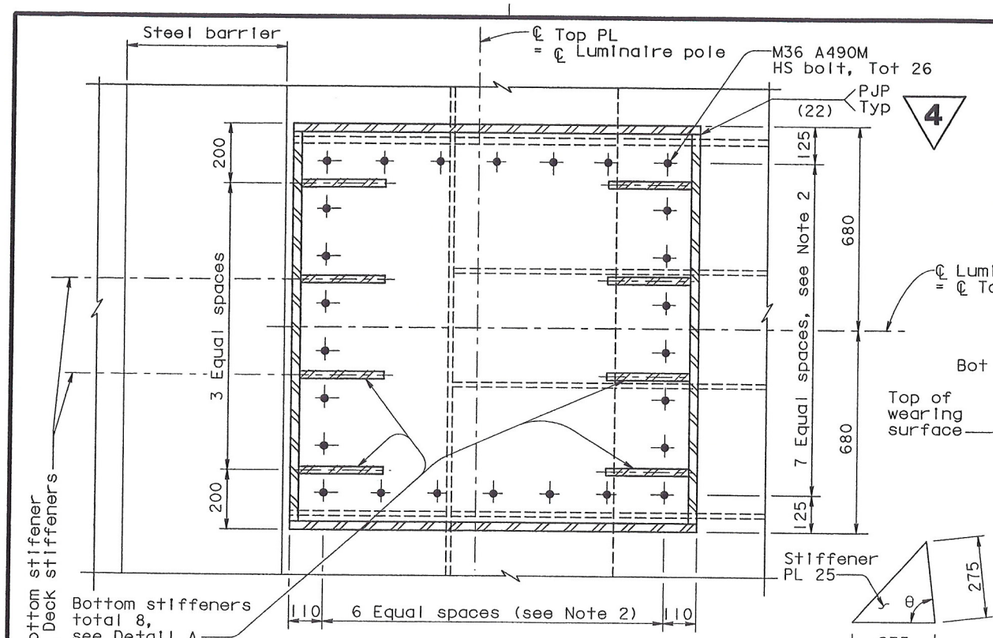

SECTION B-B
1:10

DETAIL A
NTS

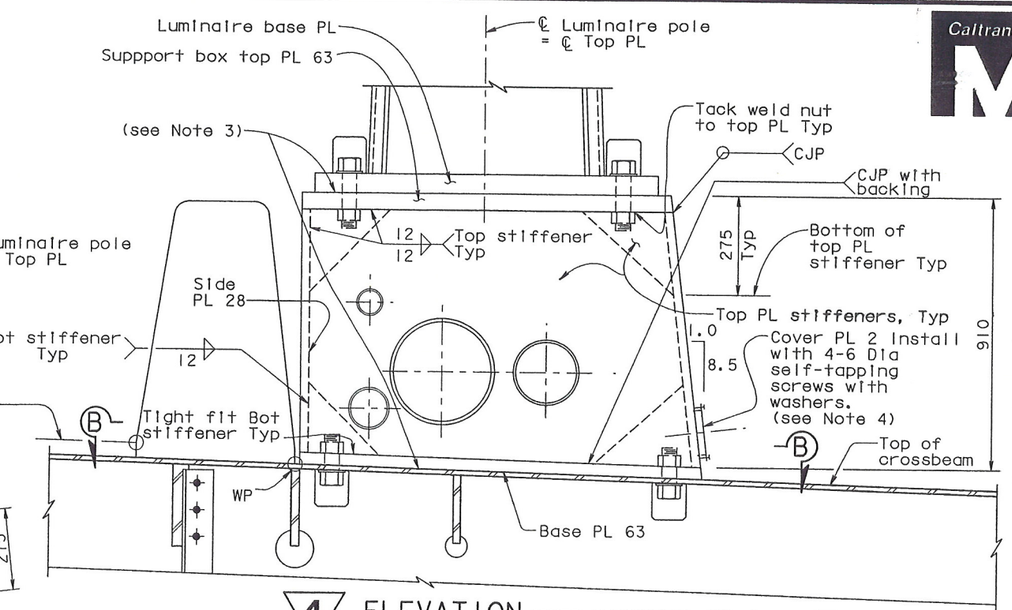

4 ELEVATION (OVER CROSSBEAM, WB shown, EB similar)
WELDED LUMINAIRE SUPPORT BOX
1:10

MARK	DATE	DESCRIPTIONS	BY	CH'D
1	07/21/06	W2 CAP BEAM ISD	JD	NV

REVISIONS

CONTRACT CHANGE ORDER NO. ____
SHEET ____ OF ____

REGISTERED PROFESSIONAL ENGINEER James P. Duxbury No. C 64677 Exp. 06/30/07 CIVIL STATE OF CALIFORNIA

FOR REVISIONS ONLY

NOTES:

1. For dimensions and details not shown, see "Luminaire Support Details No. 1" sheet.
2. Contractor to adjust bolt spacing according to field measurement of deck stiffener location.
3. Surfaces of plates shall be milled level to ensure bearing.
4. Silicone seal around edge of cover plate to ensure watertightness.
5. The Contractor shall submit for approval by the Engineer details of conduit penetration through deck plate. Conduit penetration details shall be completely sealed to ensure no water leakage into support box.
6. For location of luminaire, see "Road Plans" sheets.
7. For geometry of luminaire base plate, conduit openings and location of bolts, see "Road Plans".
8. All reinforcement in concrete luminaire support shall be epoxy coated.

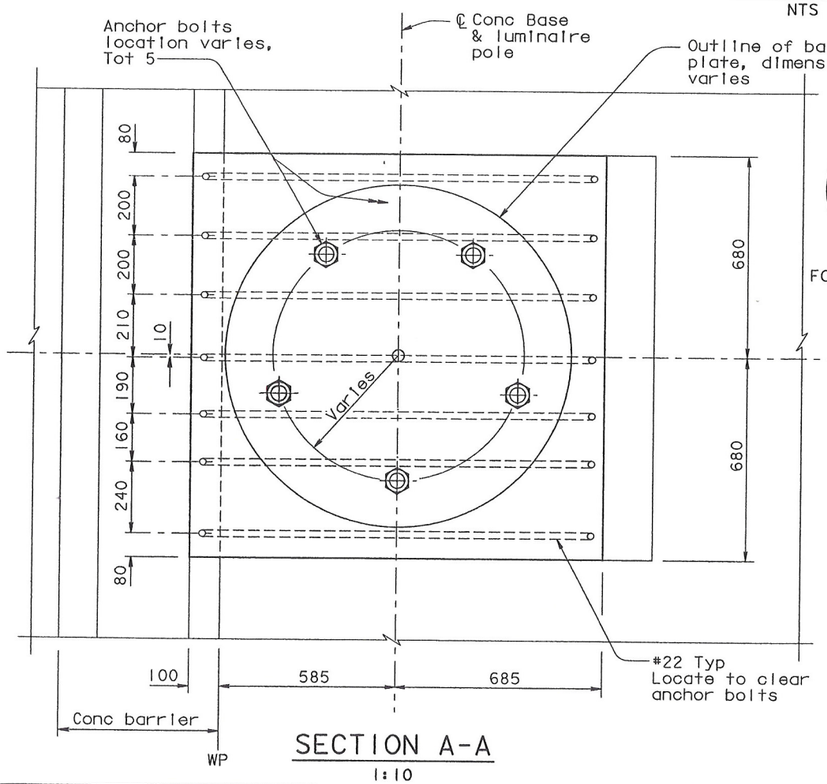

SECTION A-A
1:10

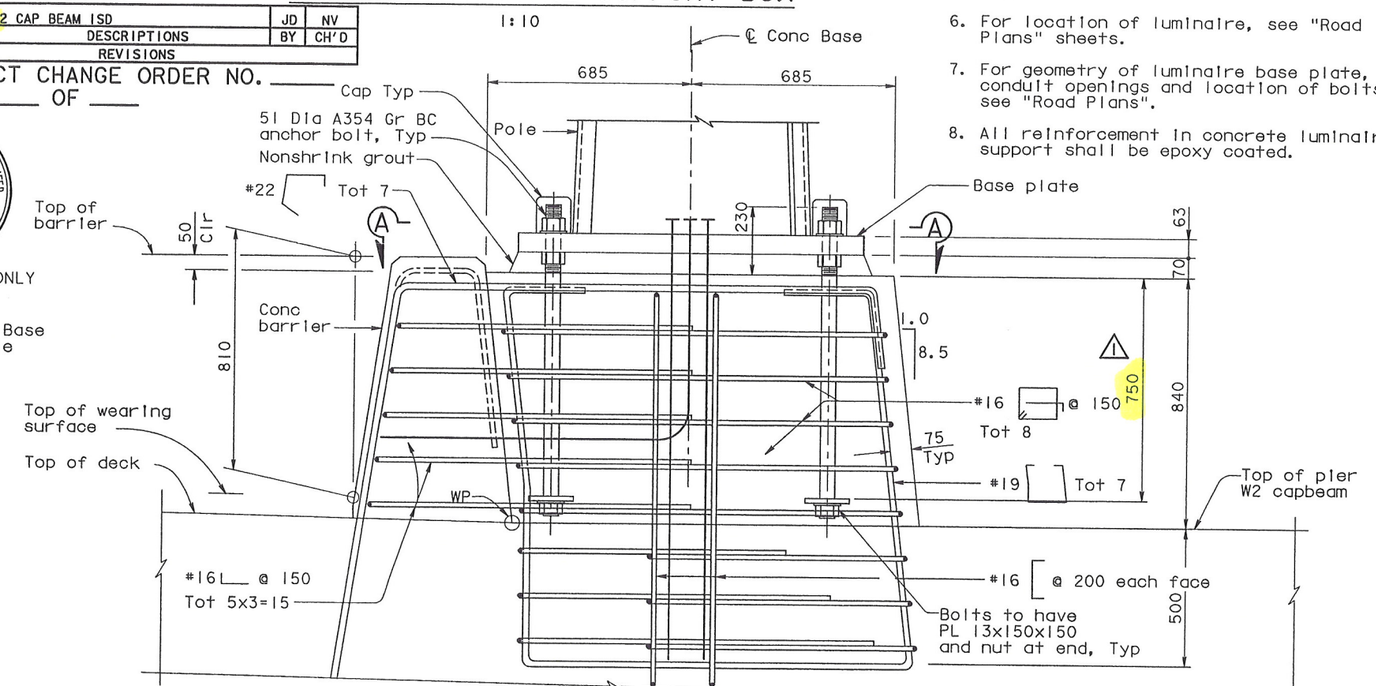

ELEVATION 4 REVISED PER ADDENDUM NO. 4 DATED DECEMBER 9, 2005
CONCRETE LUMINAIRE SUPPORT
1:10

ALL DIMENSIONS ARE IN MILLIMETERS UNLESS OTHERWISE SHOWN

R. Valizadeh/V. Toan/Y.L./W.L./F.C.
DESIGN OVERSIGHT
SIGN OFF DATE 07/21/06
Rev. Date: 5-18-98

	BY	CHECKED
DESIGN	T. Ho	C. Redfield
DETAILS	R. Xu	C. Redfield
QUANTITIES	C. Mauch	K. Cormier

PREPARED FOR THE STATE OF CALIFORNIA DEPARTMENT OF TRANSPORTATION

R. Manzanarez
PROJECT ENGINEER

BRIDGE NO. 34-0006L/R
KILOMETER POST 13.2/13.9

SAN FRANCISCO OAKLAND BAY BRIDGE
EAST SPAN SEISMIC SAFETY PROJECT
SELF-ANCHORED SUSPENSION BRIDGE
(SUPERSTRUCTURE & TOWER)

LUMINAIRE SUPPORT DETAILS NO. 2

ORIGINAL SCALE IN MILLIMETERS FOR REDUCED PLANS 0 10 20 30 40 50 60 70 80 90 100

CU 04
EA 0120F1

DISREGARD PRINTS BEARING EARLIER REVISION DATES

REVISION DATES (PRELIMINARY STAGE ONLY) 05/24/01 01/28/02 07/24/02 12/18/02 11/13/05

SHEET 488R1 OF

(FILE => p:\bb\04-012001\sas readv august 2005\oco#23\aklht08a.dgn

100 % PS&E

USERNAME => vignatovsk DATE PLOTTED => 14 JUL 2006 TIME PLOTTED => 10:10:09

DIST.	COUNTY	ROUTE	KILOMETER POST TOTAL PROJECT	SHEET NO.	TOTAL SHEETS
04	SF	80	13.2/13.9	962R1	1204

George Baker
REGISTERED ENGINEER - CIVIL
1-27-03
PLANS APPROVAL DATE

REGISTERED PROFESSIONAL ENGINEER George S. Baker No. C 57112 Exp. 12/31/07 CIVIL STATE OF CALIFORNIA

The State of California or its officers or agents shall not be responsible for the accuracy or completeness of electronic copies of this plan sheet.

T.Y. LIN / MOFFATT & NICHOL
825 BATTERY STREET
SAN FRANCISCO, CA 94111

To get to the web site, go to: http://www.dot.ca.gov

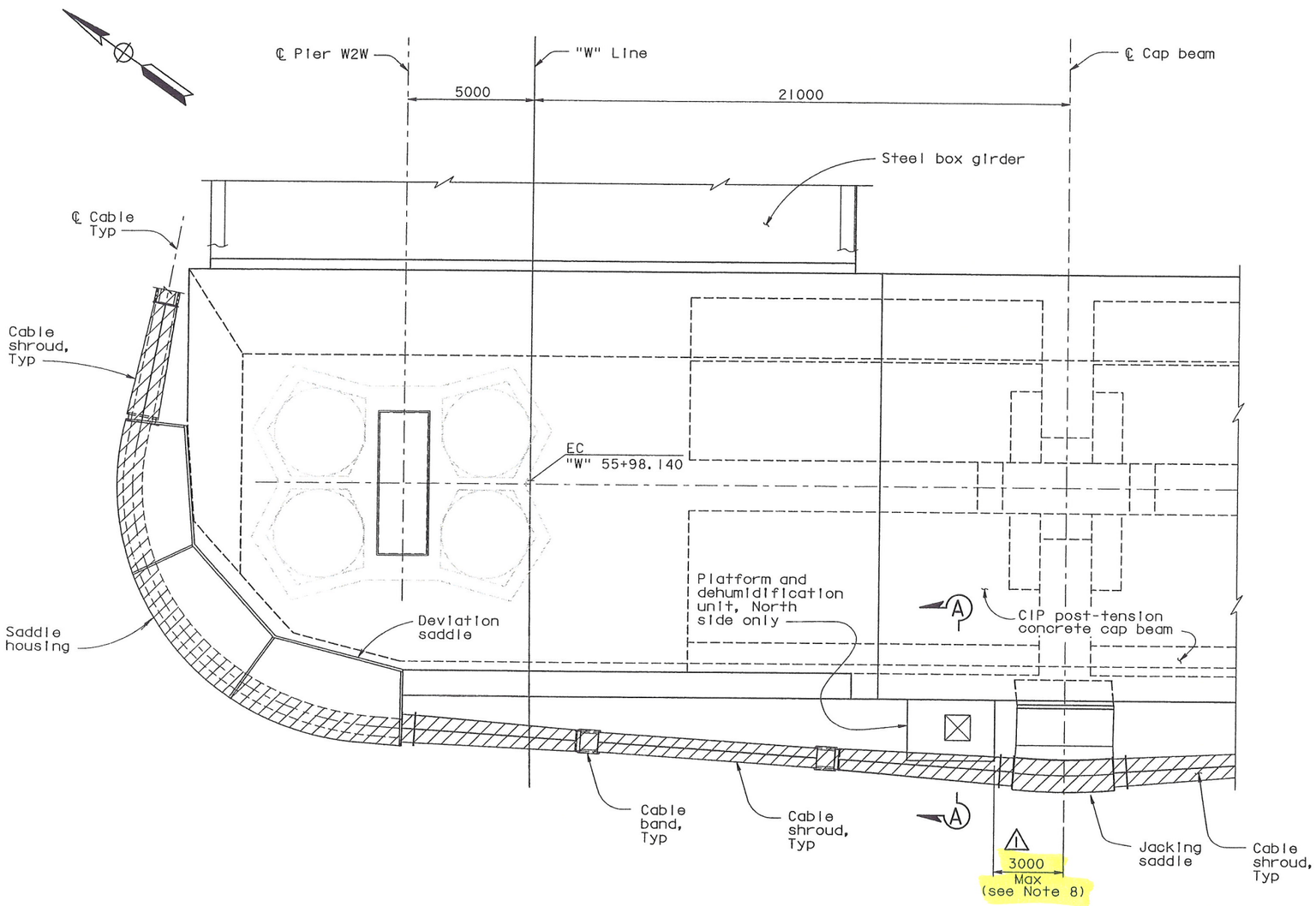

WEST PIER MAIN CABLE ANCHORAGE LAYOUT

DETAIL D

1:100

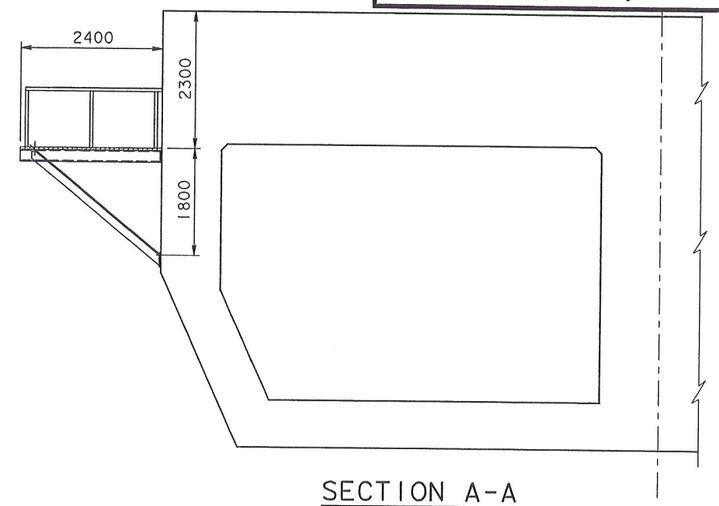

SECTION A-A

1:50

LEGEND:

Limits of dehumidification

Dehumidifier

NOTES:

1. For saddle housings, see "West Deviation Saddle Housing Details" and "West Jacking Saddle Housing Details" sheets.
2. For cable shrouds, see "West Cable Shroud Details" sheets.
3. For Cable bands, see "Cable Band Details" sheets.
4. For cable saddles, see "West Deviation Saddle Details" and "West Jacking Saddle Details" sheets.
5. Duct supports shall preferably be mounted to cable bands and saddles.
6. North side shown. South side similar, unless noted otherwise.
7. For dehumidification platform details, see "Dehumidification Support Details No.7" sheet.
8. At the option of the Contractor the location of the platform may vary transversely to satisfy his means and methods.

MARK	DATE	DESCRIPTIONS	BY	CH'D
1	07/21/06	W2 CAP BEAM ISD	GB	NV

REVISIONS

CONTRACT CHANGE ORDER NO. _____
SHEET ____ OF ____

ALL DIMENSIONS ARE IN MILLIMETERS UNLESS OTHERWISE SHOWN

R. Valizadeh/V. Toan/Y.L./W.L./F.C.
DESIGN OVERSIGHT
SIGN OFF DATE 07/21/06
Rev. Date: 5-18-98

	BY	CHECKED
DESIGN	G. Baker	T. Ho
DETAILS	C. Mauch	T. Ho
QUANTITIES	C. Mauch	D. Harrison

ORIGINAL SCALE IN MILLIMETERS FOR REDUCED PLANS 0 10 20 30 40 50 60 70 80 90 100

PREPARED FOR THE STATE OF CALIFORNIA DEPARTMENT OF TRANSPORTATION

R. Manzanarez
PROJECT ENGINEER

CU 04
EA 0120F1

BRIDGE NO. 34-0006L/R
KILOMETER POST 13.2/13.9

DISREGARD PRINTS BEARING EARLIER REVISION DATES 04/08/02 07/01/02 12/19/02

SAN FRANCISCO OAKLAND BAY BRIDGE
EAST SPAN SEISMIC SAFETY PROJECT
SELF-ANCHORED SUSPENSION BRIDGE
(SUPERSTRUCTURE & TOWER)

DEHUMIDIFICATION SUPPORT DETAILS NO.6

SHEET 545R1 OF

FILE => p:\bb\04-012001\sas readv august 2005\cco#23\akdeh06.dgn

USERNAME => vignatovsk DATE PLOTTED => 14 JUL 2006 TIME PLOTTED => 10:11:02

100 % PS&E