Caltrans now has a web site! To get to the web site, go to: http://www.dot.ca.gov

Caltrans Metric

DIST.	COUNTY	ROUTE	KILOMETER POST TOTAL PROJECT	SHEET NO.	TOTAL SHEETS
04	SF	80	13.2/13.9	511R1	1204

REGISTERED ENGINEER - CIVIL

12-6-04
PLANS APPROVAL DATE

REGISTERED PROFESSIONAL ENGINEER Alex E. Sanjines No. C 051153 Exp. 9/30/07 CIVIL STATE OF CALIFORNIA

The State of California or its officers or agents shall not be responsible for the accuracy or completeness of electronic copies of this plan sheet.

T.Y. LIN / MOFFATT & NICHOL
825 BATTERY STREET
SAN FRANCISCO, CA 94111

Caltrans now has a web site! To get to the web site, go to: http://www.dot.ca.gov

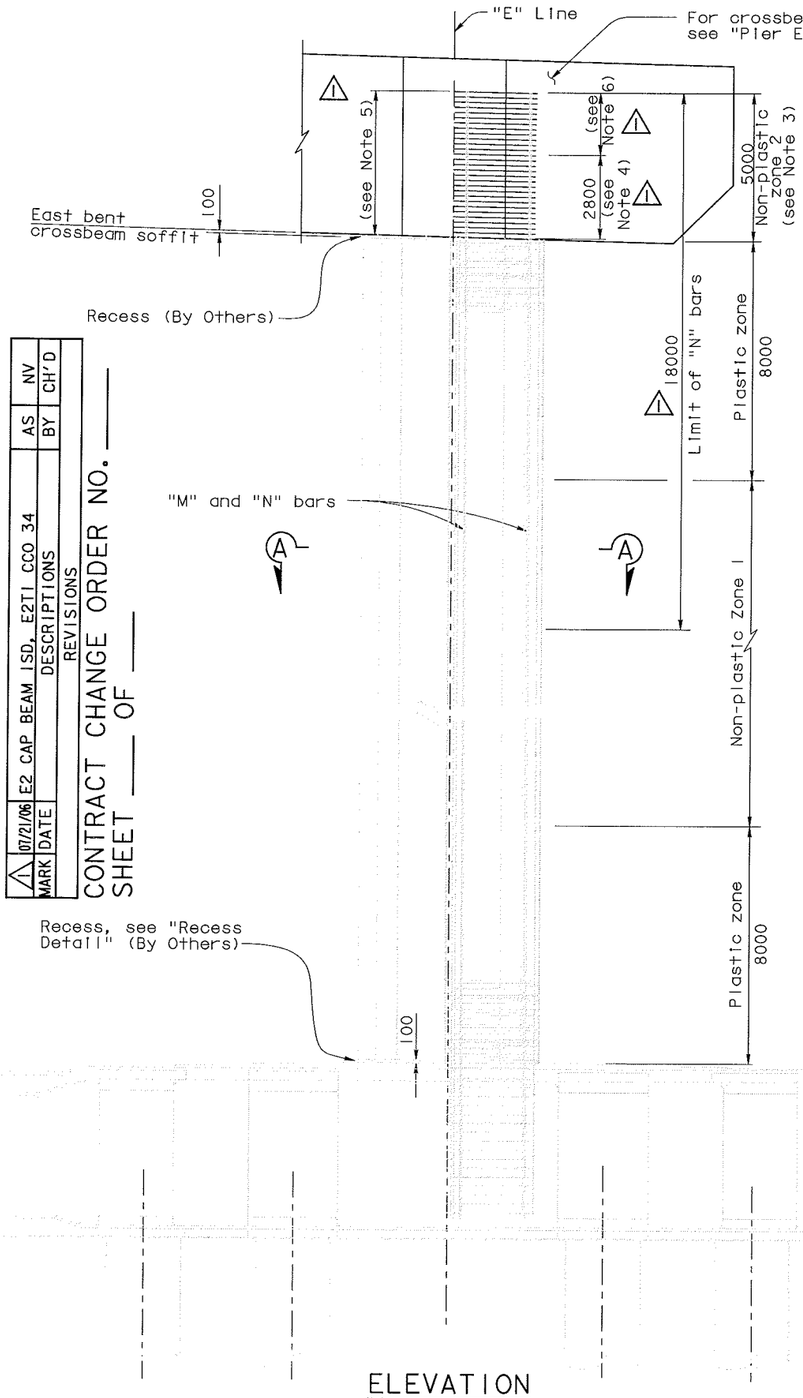

ELEVATION
1:100

Pier reinforcement (see Note 1)															
"M" bars		"N" bars		"T" and "L" bars				Continuous welded hoop							
Bundle No.-sizes	Total per pier	No. -size	Total per pier	Plastic zone		Non-plastic zone 1		Plastic zone		Non-plastic zone 1		Non-plastic zone 2		Non-plastic zone 3	
				Size	spacing	Size	spacing	No. -size	Spacing	No. -size	Spacing	No. -size	Spacing	No. -size	Spacing
48-#57 outer 36-#43 Inner	192 144	#43	40	#22	100	#22	100	2-#25	100	#25	100	#25	900 Max	2-#25	150

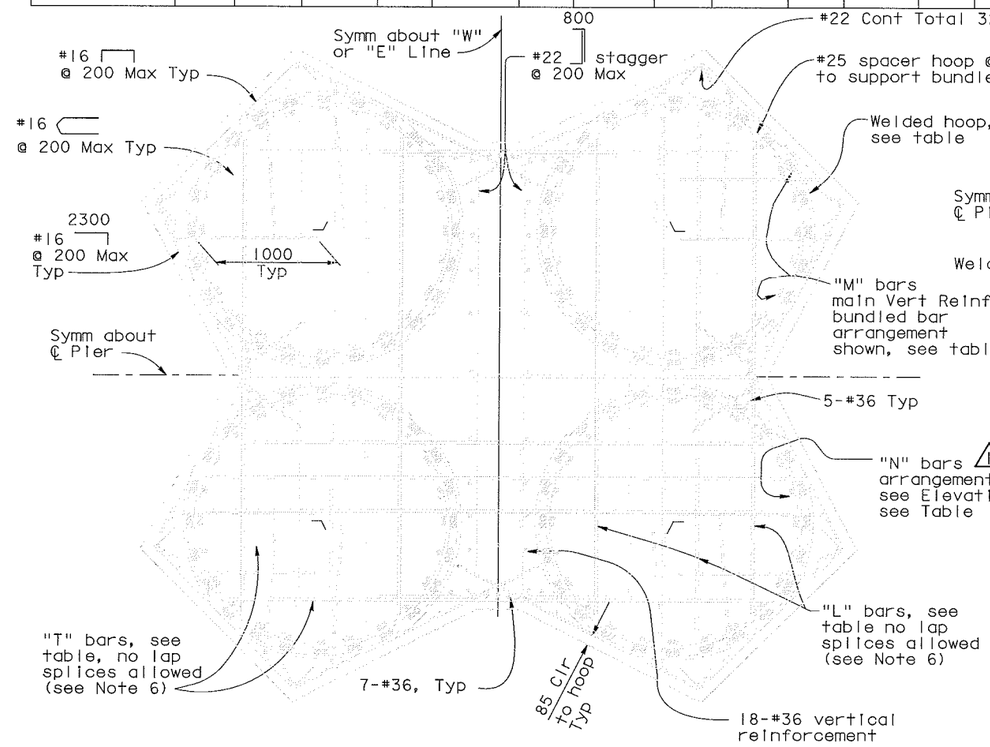

SECTION B-B
1:25

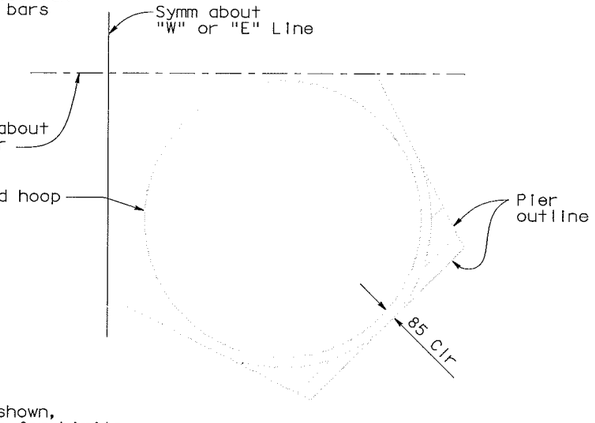

RECESS DETAIL
1:25

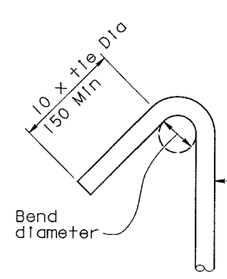

135° SEISMIC HOOK
No scale

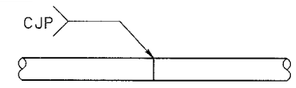

BUTT WELDED CONTINUOUS HOOP
NTS

LEGEND:

100 Recess

NOTES:

1. Reinforcement is for information only, and by Others.
2. Main vertical reinforcement and hoop reinforcement are "Ultimate" butt splices.
3. Contractor shall remove the corrosion protection from all reinforcing and shall roughen the existing Pier E2 concrete surface prior to pouring the concrete crossbeam.
4. Contractor shall remove existing continuous welded hoops down to soffit. Replace with continuous welded hoops spaced at 175 mm placed at 2% slope up to 2800 mm from soffit.
5. Refer to "Pier E2 Details No.10" sheet for main vertical reinforcement cutoff allowance.
6. Contractor shall remove existing continuous welded hoops and replace with #36 ▭ @ 175 mm placed at 2% slope. See Section F-F on "Pier E2 Detail No.4" sheet.
7. Existing column reinforcement shall be surveyed and its location coordinated with all reinforcement of the E2 Cap Beam.

MARK	DATE	DESCRIPTIONS	BY	CH'D
1	07/21/06	E2 CAP BEAM ISD, E2T1 CCO 34	AS	NV

REVISIONS

CONTRACT CHANGE ORDER NO. ___
SHEET ___ OF ___

ALL DIMENSIONS ARE IN MILLIMETERS UNLESS OTHERWISE SHOWN

R. Vallizadeh/V. Toan/Y.L./W.L./F.C.
DESIGN OVERSIGHT
SIGN OFF DATE 07/21/06

	BY	CHECKED
DESIGN	A. Sanjines	J. Chan
DETAILS	R. Xu	J. Chan
QUANTITIES	R. Xu	C. Bernardo

PREPARED FOR THE STATE OF CALIFORNIA DEPARTMENT OF TRANSPORTATION

R. Manzanarez
PROJECT ENGINEER

BRIDGE NO. 34-0006L/R
KILOMETER POST 13.2/13.9

SAN FRANCISCO OAKLAND BAY BRIDGE
EAST SPAN SEISMIC SAFETY PROJECT
SELF-ANCHORED SUSPENSION BRIDGE
(SUPERSTRUCTURE & TOWER)

PIER E2 DETAILS NO.2

Rev. Date: 5-18-98

ORIGINAL SCALE IN MILLIMETERS FOR REDUCED PLANS 0 10 20 30 40 50 60 70 80 90 100

CU 04
EA 0120F1

DISREGARD PRINTS BEARING EARLIER REVISION DATES

REVISION DATES (PRELIMINARY STAGE ONLY) 08/28/99 05/21/01 01/08/02 07/29/02 12/18/02 05/16/03

SHEET 94R1 OF

FILE => p:\bb\04-012001\sas ready august 2005\cco#23\aeplr02e-r1.dgn

USERNAME => vignatovsk DATE PLOTTED => 14 JUL 2006 TIME PLOTTED => 15:05:13

100 % PS&E

NOTES:

1. For Sections F-F and G-G, see "Pier E2 Details No.4" sheet. For Section H-H, see "Pier E2 Details No.7" sheet.
2. No splices permitted in region (1). Splicing within region (2) shall be staggered and not more than 50% at one section.
3. Cross beam reinforcement similar about ℄ Bridge.
4. Alternate 90° and 135° seismic hook horizontally and vertically. Hook shall engage horizontal bars.
5. Column hoops shall follow the 2% slope inside the capbeam.
6. PT, Bearing and Shear key hardware not shown for clarity.
7. For additional notes, see "Pier E2 Details No.4" sheet.
8. At the locations of bearings and midspan shear keys, Contractor may replace ties with equivalent headed bars.
9. Reinforcement placement support bars required (not shown), Typical.
10. Longitudinal crossbeam, reinforcement shall be placed so as to avoid pier reinforcement & anchor bolts.

DIST.	COUNTY	ROUTE	KILOMETER POST TOTAL PROJECT	SHEET NO.	TOTAL SHEETS
04	SF	80	13.2/13.9	512R1	1204

REGISTERED ENGINEER - CIVIL

12-6-04
PLANS APPROVAL DATE

REGISTERED PROFESSIONAL ENGINEER Alex E. Sanjines No. C 051153 Exp. 9/30/07 CIVIL STATE OF CALIFORNIA

The State of California or its officers or agents shall not be responsible for the accuracy or completeness of electronic copies of this plan sheet.

T.Y. LIN / MOFFATT & NICHOL
825 BATTERY STREET
SAN FRANCISCO, CA 94111

Caltrans now has a web site! To get to the web site, go to: http://www.dot.ca.gov

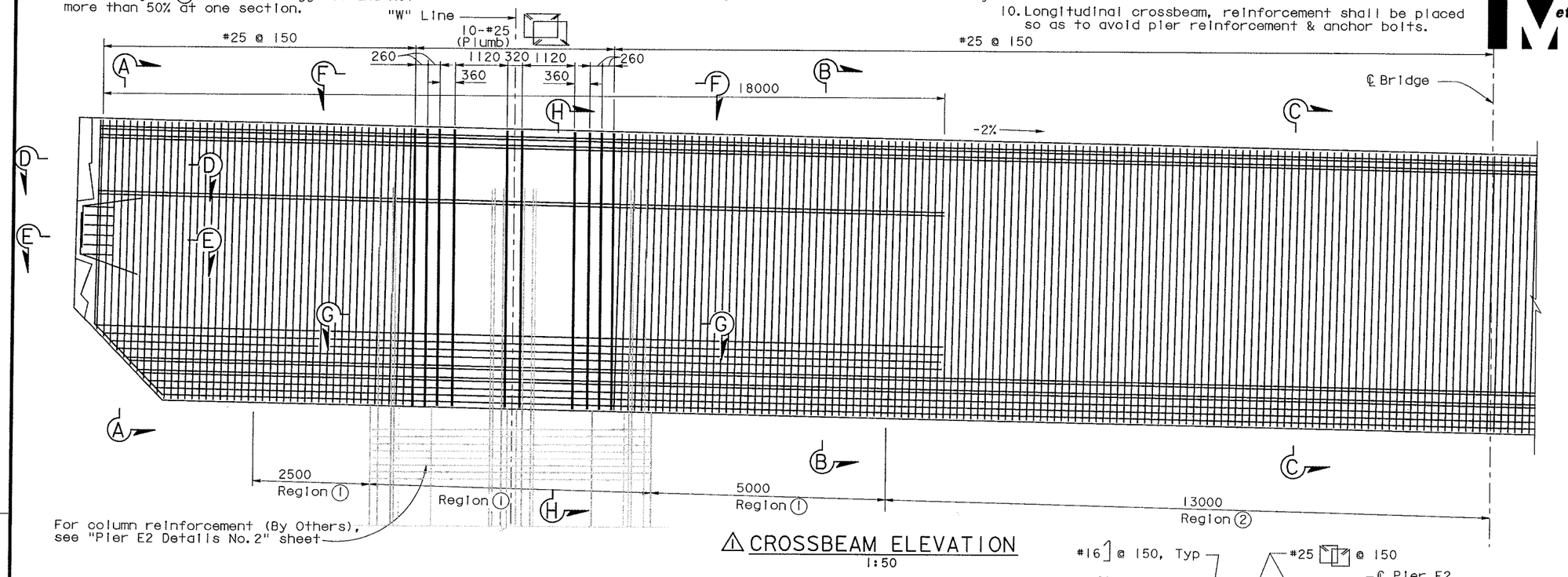

⚠ CROSSBEAM ELEVATION
1:50

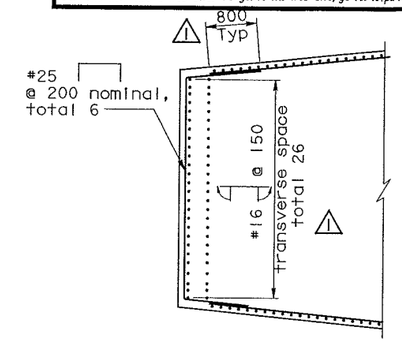

SECTION E-E
1:50

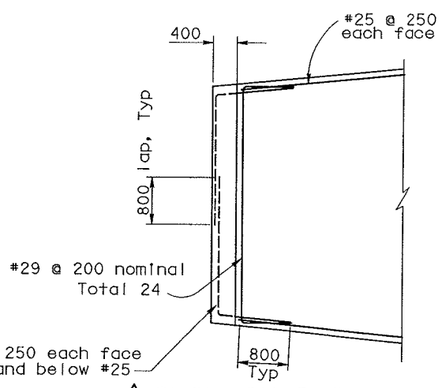

⚠ SECTION D-D (At block-out)
1:50
(Not all reinforcement shown for clarity)

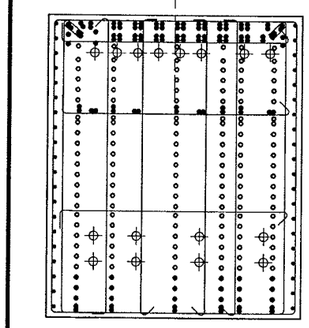

⚠ SECTION A-A
1:50

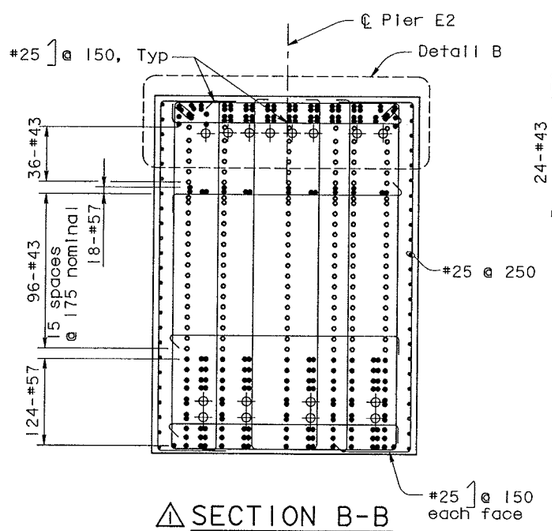

⚠ SECTION B-B
1:50

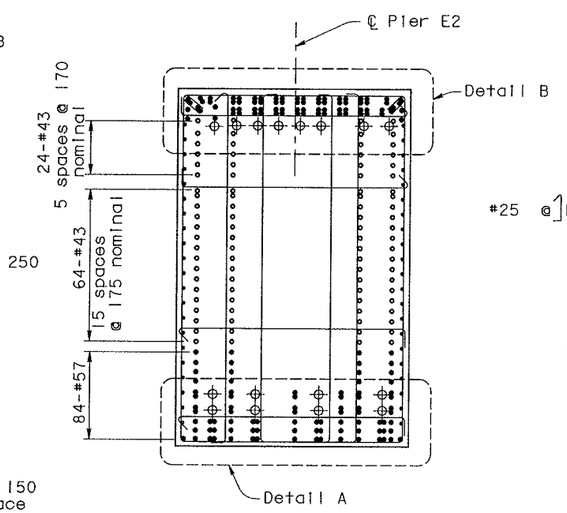

⚠ SECTION C-C
1:50

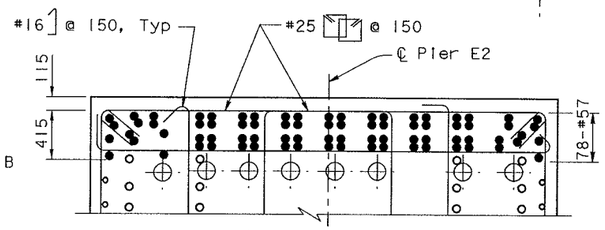

⚠ DETAIL B
1:25

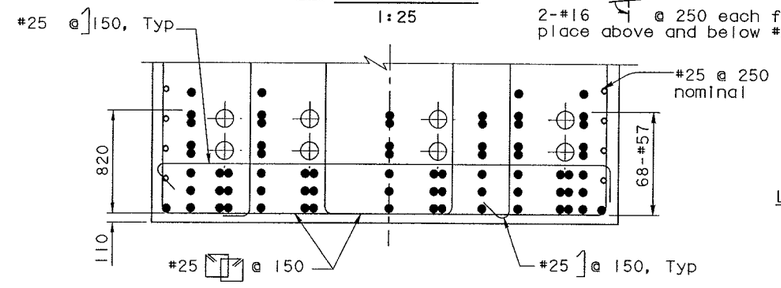

⚠ DETAIL A
1:25

ALL DIMENSIONS ARE IN MILLIMETERS UNLESS OTHERWISE SHOWN

LEGEND:

- ● #57 Bar
- ○ #43 Bar
- ∘ #25 Bar

100 % PS&E

MARK	DATE	DESCRIPTIONS	BY	CH'D
1	07/21/06	E2 CAP BEAM ISD	AS	NV

REVISIONS

CONTRACT CHANGE ORDER NO. ____
SHEET ____ OF ____

R. Valizadeh/V. Toan/Y.L./W.L./F.C.
DESIGN OVERSIGHT
SIGN OFF DATE 07/21/06

Rev. Date: 5-18-98

DESIGN	BY A. Sanjines	CHECKED J. Chan	
DETAILS	BY R. Xu	CHECKED J. Chan	
QUANTITIES	BY C. Bernardo	CHECKED B. Mason	

PREPARED FOR THE STATE OF CALIFORNIA DEPARTMENT OF TRANSPORTATION

R. Manzanarez
PROJECT ENGINEER

BRIDGE NO. 34-0006L/R
KILOMETER POST 13.2/13.9

SAN FRANCISCO OAKLAND BAY BRIDGE
EAST SPAN SEISMIC SAFETY PROJECT
SELF-ANCHORED SUSPENSION BRIDGE
(SUPERSTRUCTURE & TOWER)

PIER E2 DETAILS NO.3

ORIGINAL SCALE IN MILLIMETERS FOR REDUCED PLANS 0 10 20 30 40 50 60 70 80 90 100

CU 04
EA 0120F1

DISREGARD PRINTS BEARING EARLIER REVISION DATES

REVISION DATES (PRELIMINARY STAGE ONLY): 08/06/99 05/24/01 04/08/02 07/24/02 12/18/02 05/16/03

SHEET 95R1 OF

FILE => p:\bb\04-012001\sas readv august 2005\cco#23\oeplr03e-rl.dgn

USERNAME => vignatovs DATE PLOTTED => 14 JUL 2006 TIME PLOTTED => 14:45:22

DIST.	COUNTY	ROUTE	KILOMETER POST TOTAL PROJECT	SHEET NO.	TOTAL SHEETS
04	SF	80	13.2/13.9	513R1	1204

Caltrans Metric

REGISTERED ENGINEER - CIVIL

12-6-04

PLANS APPROVAL DATE

REGISTERED PROFESSIONAL ENGINEER Alex E. Sanjines No. C 051153 Exp. 9/30/07 CIVIL STATE OF CALIFORNIA

The State of California or its officers or agents shall not be responsible for the accuracy or completeness of electronic copies of this plan sheet.

T.Y. LIN / MOFFATT & NICHOL
825 BATTERY STREET
SAN FRANCISCO, CA 94111

Caltrans now has a web site! To get to the web site, go to: http://www.dot.ca.gov

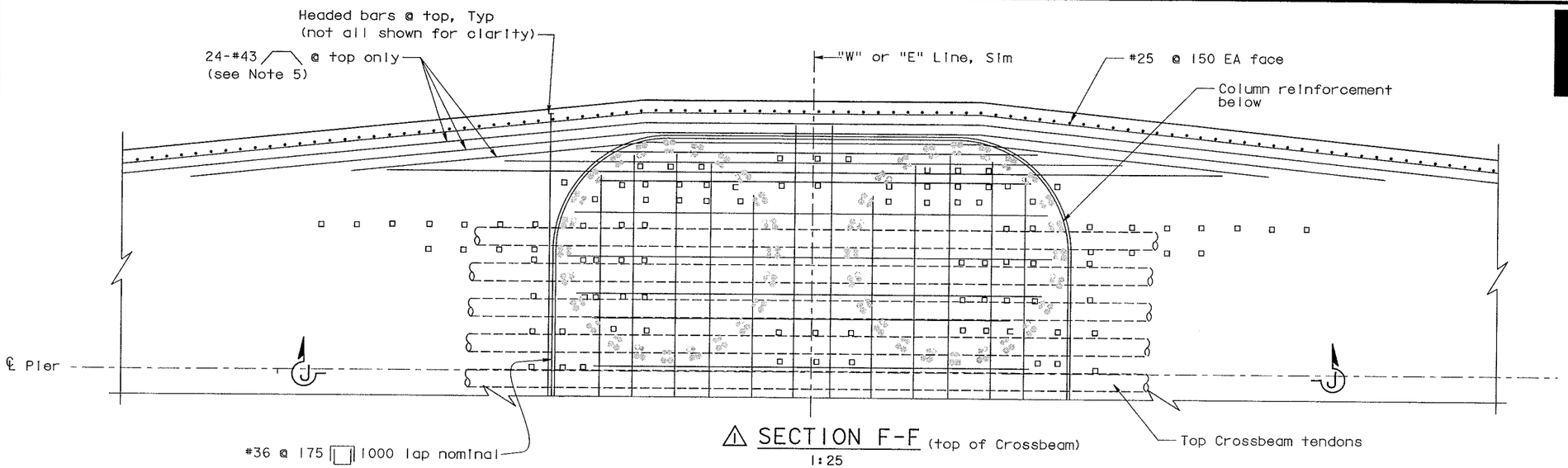

SECTION F-F (top of Crossbeam)
1:25

LEGEND

□I - Indicates Welded Headed bar (see Note 4)

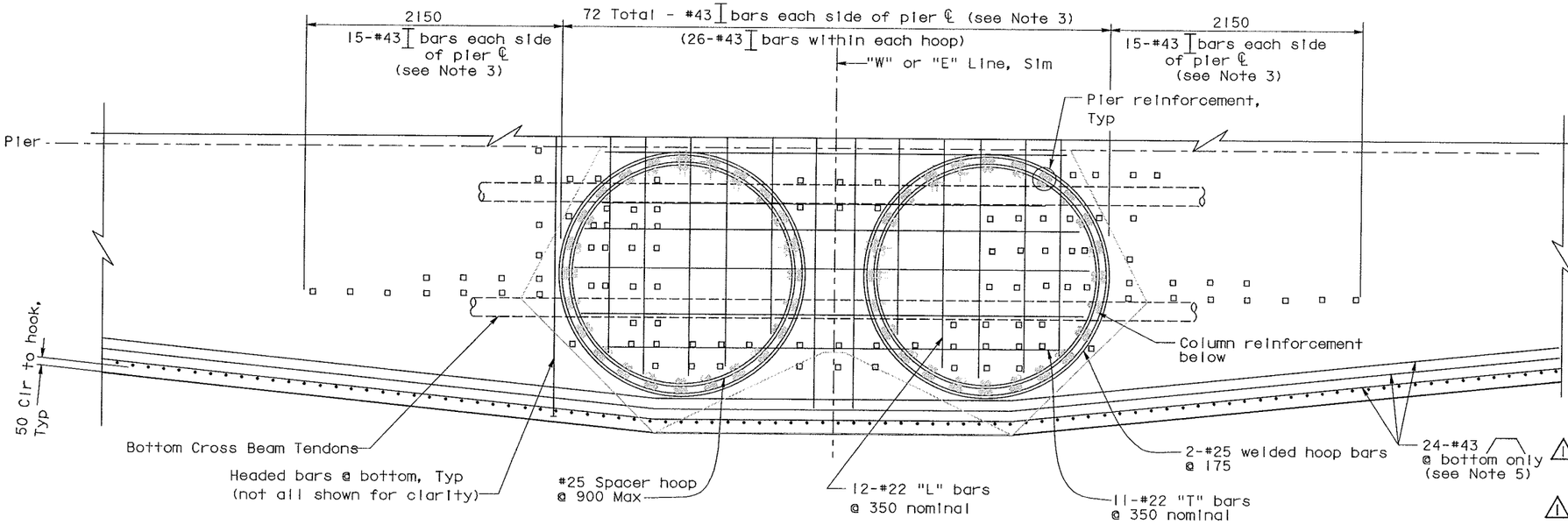

SECTION G-G (Crossbeam soffit)
1:25

NOTES:

1. Not all reinforcement shown for clarity.
2. Adjust reinforcement as required to clear column reinforcement.
3. Adjust vertical headed bars within hoops to clear prestressing and main longitudinal reinforcement. Vertical reinforcement may be terminated subject to approval by the Engineer.
4. Headed reinforcement may consist of rebar with either friction welded plates or threaded heads. Threaded heads must equal or exceed the capacity of welded plates.
5. Cut off #43 top and bottom longitudinal bars at widened beam to avoid main Crossbeam longitudinal reinforcement as required.
6. Reinforcement details reflect strict adherence to the location of pier column reinforcement defined on "Pier E2 details No. 2" sheet.
7. Adequate fabrication and placement of all permanently embedded items may require more stringent tolerances than ordinary industry standards. It shall be the Contractor's responsibility to ensure the adequate fabrication and placement of all permanently embedded items within the geometric constraints of the plans.
8. For anchor rod layouts and details for bearings and shear keys, see "Pier E2 details No. 9" sheet.
9. For Section J-J see "Pier E2 Details No. 7" sheet.

MARK	DATE	DESCRIPTIONS	BY	CH'D
1	07/21/06	E2 CAP BEAM ISD	AS	NV

REVISIONS

CONTRACT CHANGE ORDER NO. _____
SHEET ____ OF ____

100 % PS&E

ALL DIMENSIONS ARE IN MILLIMETERS UNLESS OTHERWISE SHOWN

R. Valizadeh/V. Toan/Y.L./W.L./F.C.
DESIGN OVERSIGHT
Roger Valizadeh / Vonn Toan / Y. Lin
SIGN OFF DATE 07/21/06

	BY	CHECKED
DESIGN	A. Sanjines	J. Chan
DETAILS	R. Xu	J. Chan
QUANTITIES	C. Bernardo	B. Mason

PREPARED FOR THE STATE OF CALIFORNIA DEPARTMENT OF TRANSPORTATION

R. Manzanarez
PROJECT ENGINEER

BRIDGE NO. 34-0006L/R
KILOMETER POST 13.2/13.9

SAN FRANCISCO OAKLAND BAY BRIDGE
EAST SPAN SEISMIC SAFETY PROJECT
SELF-ANCHORED SUSPENSION BRIDGE
(SUPERSTRUCTURE & TOWER)

PIER E2 DETAILS NO. 4

Rev. Date: 5-18-98

ORIGINAL SCALE IN MILLIMETERS FOR REDUCED PLANS 0 10 20 30 40 50 60 70 80 90 100

CU 04
EA 0120F1

DISREGARD PRINTS BEARING EARLIER REVISION DATES

REVISION DATES (PRELIMINARY STAGE ONLY) 08/02/99 05/31/01 04/08/02 07/01/02 12/19/02

SHEET 96R1 OF

FILE => p:\bb\04-012001\sas readv august 2005\cco#23\aepir10.dgn

USERNAME => vignatovsk DATE PLOTTED => 14 JUL 2006 TIME PLOTTED => 14:46:31

DIST.	COUNTY	ROUTE	KILOMETER POST TOTAL PROJECT	SHEET NO.	TOTAL SHEETS
04	SF	80	13.2/13.9	514R1	1204

REGISTERED ENGINEER - CIVIL

12-6-04
PLANS APPROVAL DATE

REGISTERED PROFESSIONAL ENGINEER
Alex E. Sanjines
No. C 051153
Exp. 9/30/07
CIVIL
STATE OF CALIFORNIA

The State of California or its officers or agents shall not be responsible for the accuracy or completeness of electronic copies of this plan sheet.

T.Y. LIN / MOFFATT & NICHOL
825 BATTERY STREET
SAN FRANCISCO, CA 94111

Caltrans now has a web site! To get to the web site, go to: http://www.dot.ca.gov

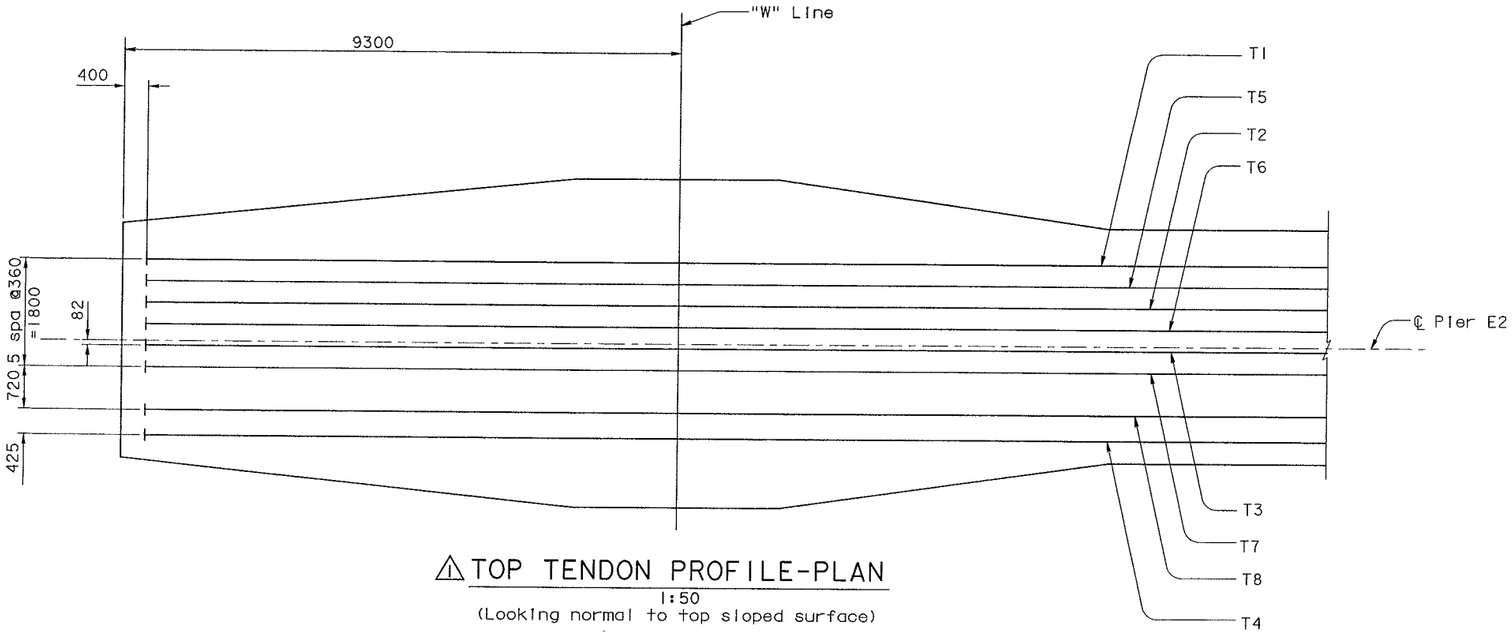

⚠1 TOP TENDON PROFILE-PLAN

1:50
(Looking normal to top sloped surface)

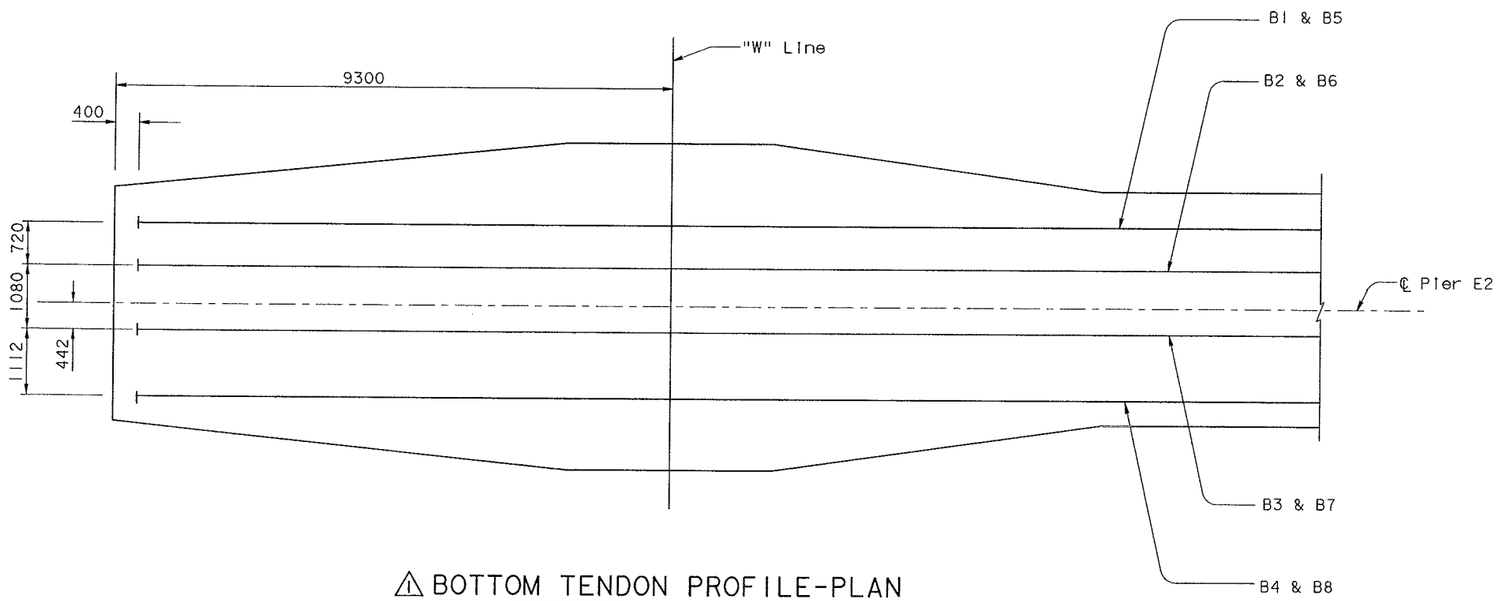

⚠1 BOTTOM TENDON PROFILE-PLAN

1:50
(Looking normal to top sloped surface)

MARK	DATE	DESCRIPTIONS	BY	CH'D
⚠1	07/21/06	E2 CAP BEAM ISD	AS	NV

REVISIONS

CONTRACT CHANGE ORDER NO. _____
SHEET ____ OF ____

NOTES:

1. "W" Line shown, "E" Line similar.
2. For tendon anchorage block-out details, see "Pier E2 Details No.8" sheet.
3. For concrete crossbeam reinforcement, see "Pier E2 Details No.3", "Pier E2 Details No.4", and "Pier E2 Details No.7" sheets. ⚠1
4. For stressing force, use two end stressing and initial jacking stress $= 0.75\ f_{pu} = 0.75 \times 1860 = 1390$ MPa.
5. For additional prestressing notes, see Prestressing Notes" sheet.
6. The post-tensioning and grouting sequence shall prevent ducts from crushing.
7. ⚠1 The outer diameter of the PT duct shall not be greater than 180 mm.

ALL DIMENSIONS ARE IN MILLIMETERS UNLESS OTHERWISE SHOWN

R. Valizadeh/V. Toan/Y.L./W.L./F.C.
DESIGN OVERSIGHT
SIGN OFF DATE 07/21/06

	BY	CHECKED
DESIGN	A. Sanjines	J. Chan
DETAILS	R. Xu	J. Chan
QUANTITIES	C. Bernardo	B. Mason

PREPARED FOR THE STATE OF CALIFORNIA DEPARTMENT OF TRANSPORTATION

R. Manzanarez
PROJECT ENGINEER

BRIDGE NO. 34-0006L/R
KILOMETER POST 13.2/13.9

SAN FRANCISCO OAKLAND BAY BRIDGE
EAST SPAN SEISMIC SAFETY PROJECT
SELF-ANCHORED SUSPENSION BRIDGE
(SUPERSTRUCTURE & TOWER)

PIER E2 DETAILS NO.5

Rev. Date: 5-18-98

ORIGINAL SCALE IN MILLIMETERS FOR REDUCED PLANS 0 10 20 30 40 50 60 70 80 90 100

CU 04
EA 0120F1

DISREGARD PRINTS BEARING EARLIER REVISION DATES

REVISION DATES (PRELIMINARY STAGE ONLY) 08/02/99 05/31/01 04/08/02 07/01/02 12/19/02

SHEET 97R1 OF

FILE => p:\bb\04-012001\sas readv august 2005\cco#23\aepir05e.dgn

100 % PS&E

USERNAME => vignatovsk DATE PLOTTED => 14 JUL 2006 TIME PLOTTED => 14:47:38

DIST.	COUNTY	ROUTE	KILOMETER POST TOTAL PROJECT	SHEET NO.	TOTAL SHEETS
04	SF	80	13.2/13.9	515R1	1204

REGISTERED ENGINEER - CIVIL

12-6-04
PLANS APPROVAL DATE

REGISTERED PROFESSIONAL ENGINEER Alex E. Sanjines No. C 051153 Exp. 9/30/07 CIVIL STATE OF CALIFORNIA

The State of California or its officers or agents shall not be responsible for the accuracy or completeness of electronic copies of this plan sheet.

T.Y. LIN / MOFFATT & NICHOL
825 BATTERY STREET
SAN FRANCISCO, CA 94111

Caltrans now has a web site! To get to the web site, go to: http://www.dot.ca.gov

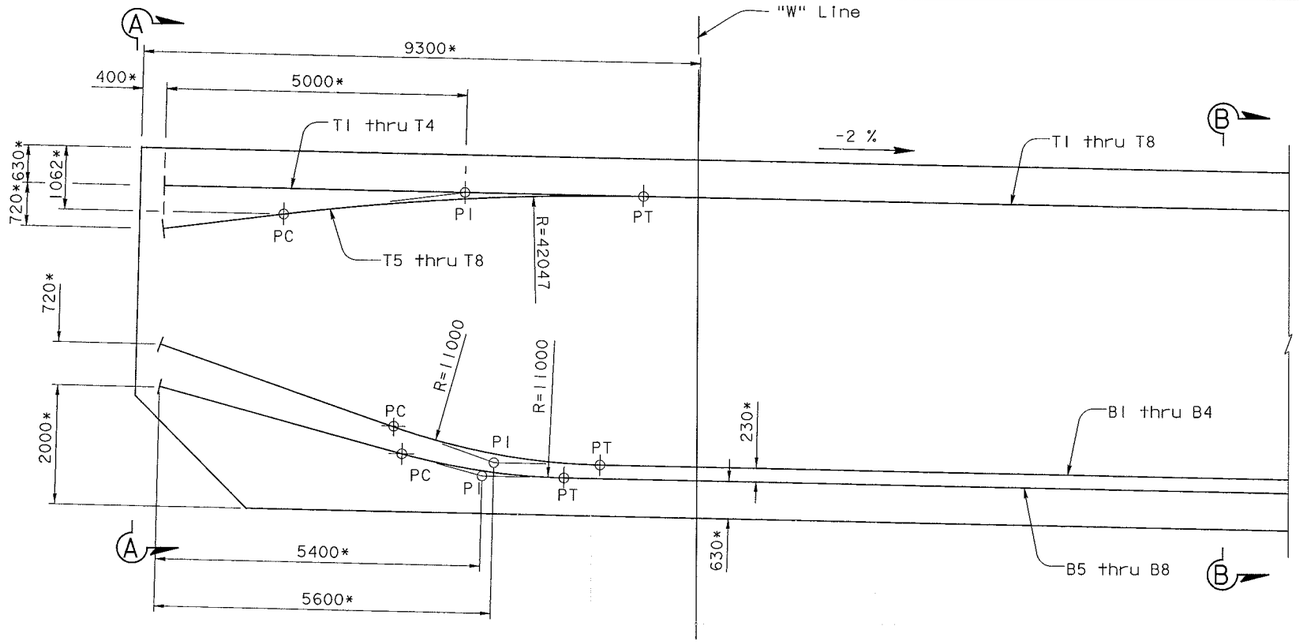

⚠ TOP AND BOTTOM TENDON PROFILE-ELEVATION

1:50

* Dimensions are nominal and parallel to sloped cap beam surface

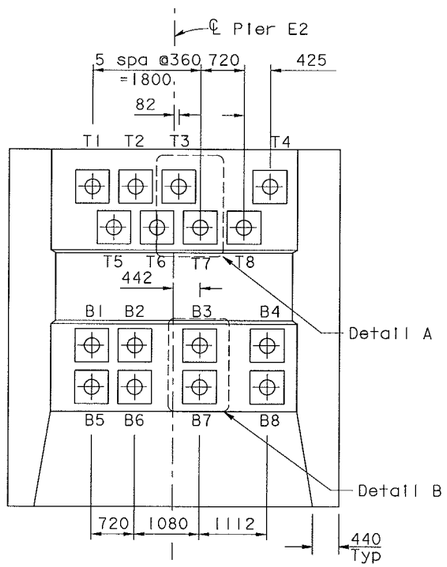

⚠ SECTION A-A

1:50
(reinforcement is not shown for clarity)

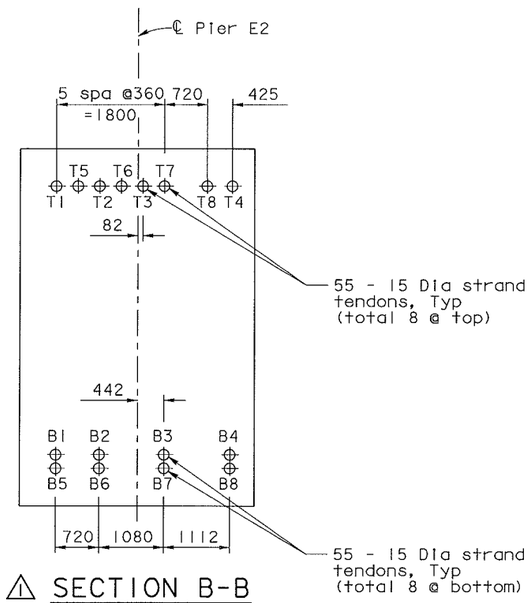

⚠ SECTION B-B

1:50
(reinforcement is not shown for clarity)

MARK	DATE	DESCRIPTIONS	BY	CH'D
1	07/21/06	E2 CAP BEAM ISD	AS	NV

REVISIONS

CONTRACT CHANGE ORDER NO. _____
SHEET ____ OF ____

NOTES:

1. "W" Line shown, "E" Line similar.

ALL DIMENSIONS ARE IN MILLIMETERS UNLESS OTHERWISE SHOWN

R. Vallzadeh/V. Toan/Y.L./W.L./F.C.
DESIGN OVERSIGHT
SIGN OFF DATE 07/21/06

	BY	CHECKED
DESIGN	A. Sanjines	J. Chan
DETAILS	R. Xu	J. Chan
QUANTITIES	C. Bernardo	B. Mason

PREPARED FOR THE STATE OF CALIFORNIA DEPARTMENT OF TRANSPORTATION

R. Manzanarez
PROJECT ENGINEER

BRIDGE NO. 34-0006L/R
KILOMETER POST 13.2/13.9

SAN FRANCISCO OAKLAND BAY BRIDGE
EAST SPAN SEISMIC SAFETY PROJECT
SELF-ANCHORED SUSPENSION BRIDGE
(SUPERSTRUCTURE & TOWER)

PIER E2 DETAILS NO. 6

Rev. Date: 5-18-98

ORIGINAL SCALE IN MILLIMETERS FOR REDUCED PLANS 0 10 20 30 40 50 60 70 80 90 100

CU 04
EA 0120F1

DISREGARD PRINTS BEARING EARLIER REVISION DATES

REVISION DATES (PRELIMINARY STAGE ONLY) 08/01/99 05/31/01 04/08/02 07/01/02 12/14/02 05/18/03 12/07/05

SHEET 98R1 OF

FILE => p:\bb\04-0120f1\sas readv august 2005\cco#23\aeplr09-r1.dgn

USERNAME => vlignatovs DATE PLOTTED => 14 JUL 2006 TIME PLOTTED => 15:14:44

100 % PS&E

DIST.	COUNTY	ROUTE	KILOMETER POST TOTAL PROJECT	SHEET NO.	TOTAL SHEETS
04	SF	80	13.2/13.9	516R1	1204

Caltrans Metric

REGISTERED ENGINEER - CIVIL

12-6-04

PLANS APPROVAL DATE

The State of California or its officers or agents shall not be responsible for the accuracy or completeness of electronic copies of this plan sheet.

REGISTERED PROFESSIONAL ENGINEER Alex E. Sanjines No. C 051153 Exp. 9/30/07 CIVIL STATE OF CALIFORNIA

T.Y. LIN / MOFFATT & NICHOL
825 BATTERY STREET
SAN FRANCISCO, CA 94111

Caltrans now has a web site! To get to the web site, go to: http://www.dot.ca.gov

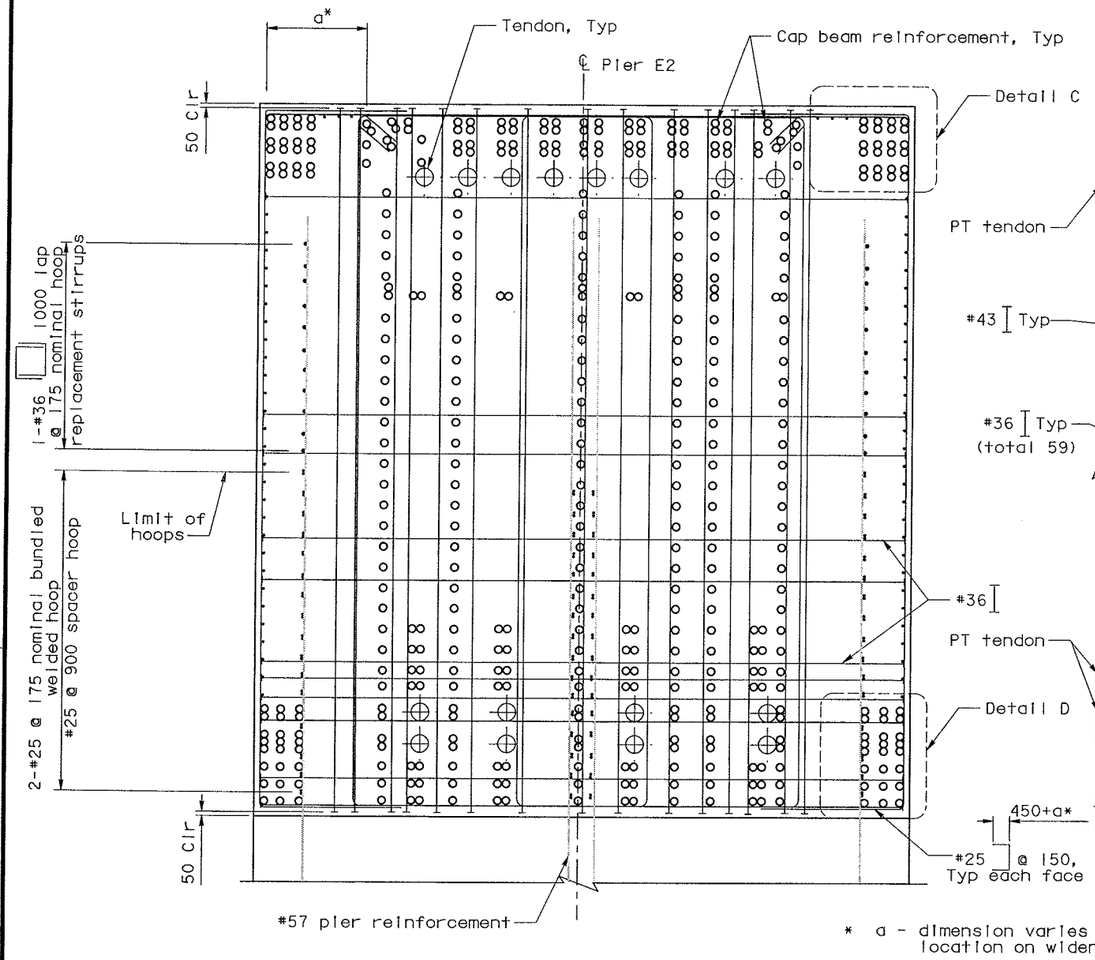

* a - dimension varies with location on widened beam

SECTION H-H
1:25
(Not all rebars shown for clarity)

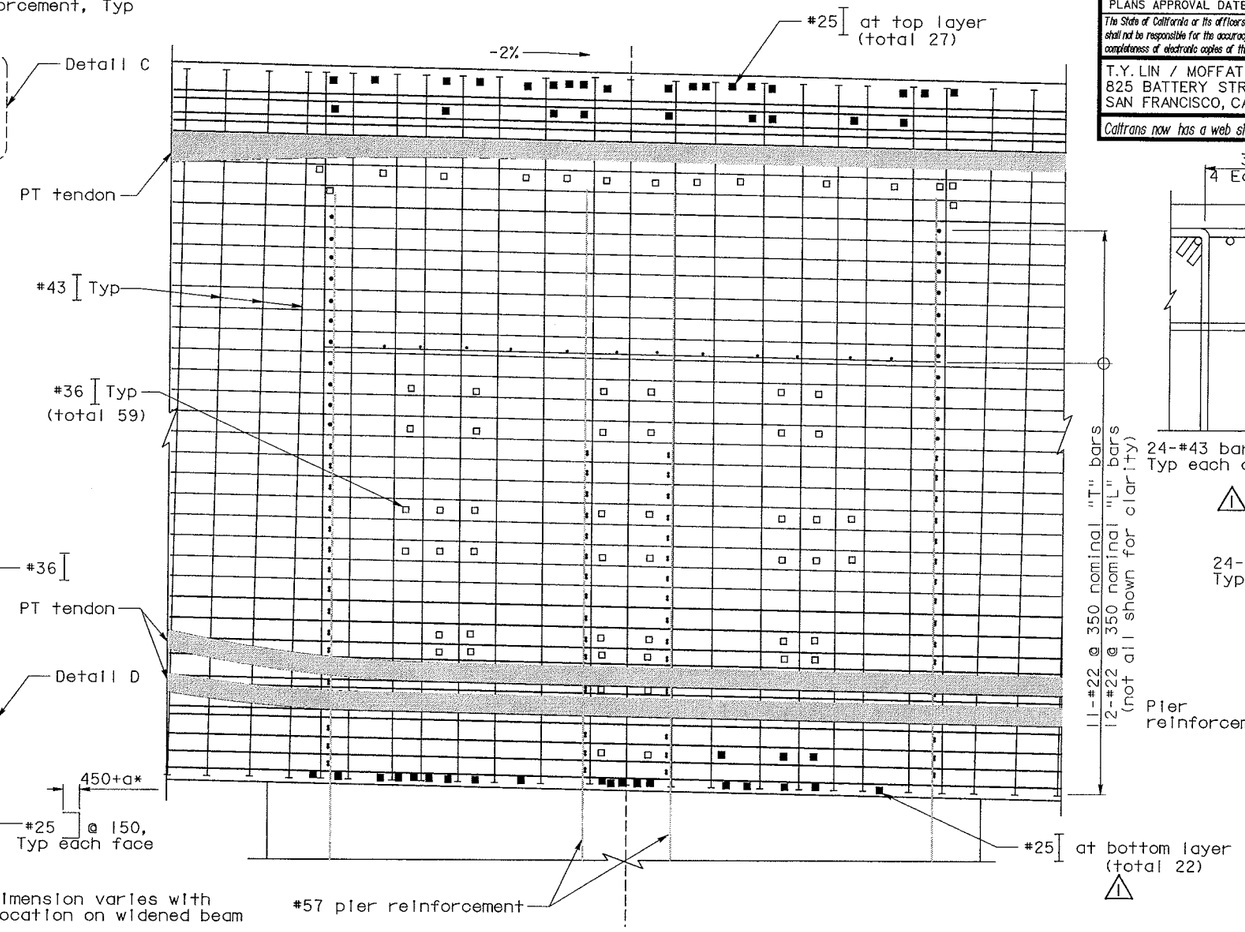

SECTION J-J
1:25
(Not all rebars shown for clarity)

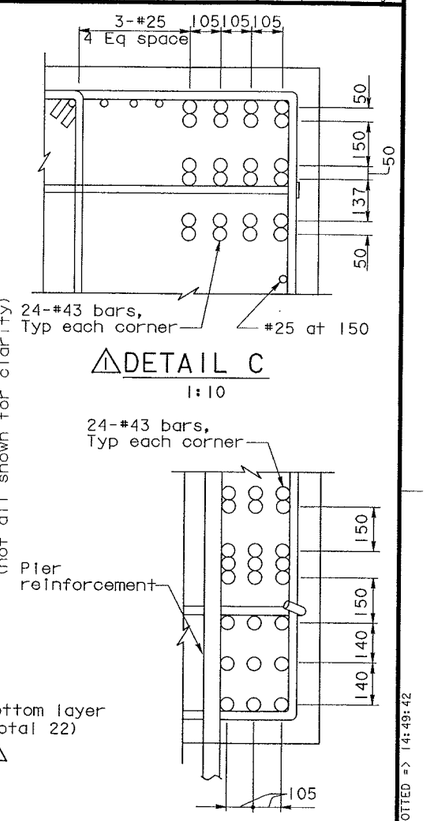

DETAIL C
1:10

DETAIL D
1:10

NOTES:

1. Adjust reinforcement as required to clear column reinforcement. Bars can be moved and bundled to adjacent bars that clear column reinforcement.
2. For additional notes, see "Pier E2 Details No.3" and "Pier E2 Details No.4".

LEGEND
- #43 Headed bar
- #36 Headed bar
- #25 Headed bar

MARK	DATE	DESCRIPTIONS	BY	CH'D
1	07/21/06	E2 CAP BEAM ISD	AS	NV

REVISIONS

CONTRACT CHANGE ORDER NO. _____
SHEET ____ OF ____

ALL DIMENSIONS ARE IN MILLIMETERS UNLESS OTHERWISE SHOWN

R. Valizadeh/V. Toan/Y.L./W.L./F.C.
DESIGN OVERSIGHT
SIGN OFF DATE 07/21/06

	BY	CHECKED
DESIGN	A. Sanjines	J. Chan
DETAILS	R. Xu	J. Chan
QUANTITIES	C. Bernardo	B. Mason

PREPARED FOR THE STATE OF CALIFORNIA DEPARTMENT OF TRANSPORTATION

R. Manzanarez
PROJECT ENGINEER

BRIDGE NO. 34-0006L/R
KILOMETER POST 13.2/13.9

SAN FRANCISCO OAKLAND BAY BRIDGE
EAST SPAN SEISMIC SAFETY PROJECT
SELF-ANCHORED SUSPENSION BRIDGE
(SUPERSTRUCTURE & TOWER)

PIER E2 DETAILS NO. 7

Rev. Date: 5-18-98

ORIGINAL SCALE IN MILLIMETERS FOR REDUCED PLANS 0 10 20 30 40 50 60 70 80 90 100

CU 04
EA 0120F1

DISREGARD PRINTS BEARING EARLIER REVISION DATES

REVISION DATES (PRELIMINARY STAGE ONLY) 08/02/99 05/31/01 04/04/02 07/01/02 12/19/02 05/16/03

SHEET 99R1 OF

FILE => p:\bb\04-012001\sas readv august 2005\cco#23\aepir04e-r1.dgn

100 % PS&E

USERNAME => vignatovs DATE PLOTTED => 14 JUL 2006 TIME PLOTTED => 14:49:42

DIST.	COUNTY	ROUTE	KILOMETER POST TOTAL PROJECT	SHEET NO.	TOTAL SHEETS
04	SF	80	13.2/13.9	517R1	1204

Caltrans Metric

REGISTERED ENGINEER - CIVIL

12-6-04
PLANS APPROVAL DATE

REGISTERED PROFESSIONAL ENGINEER Alex E. Sanjines No. C 051153 Exp. 9/30/07 CIVIL STATE OF CALIFORNIA

The State of California or its officers or agents shall not be responsible for the accuracy or completeness of electronic copies of this plan sheet.

T.Y. LIN / MOFFATT & NICHOL
825 BATTERY STREET
SAN FRANCISCO, CA 94111

Caltrans now has a web site! To get to the web site, go to: http://www.dot.ca.gov

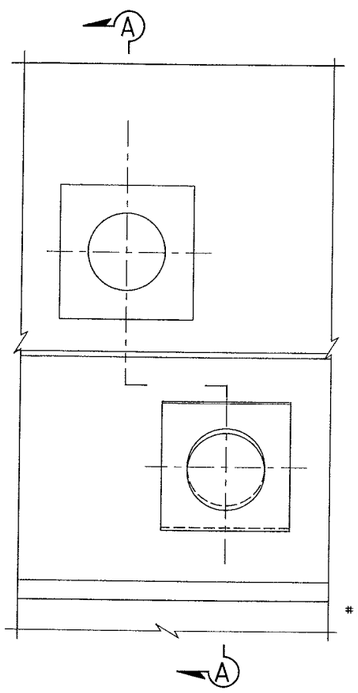

DETAIL A
NTS

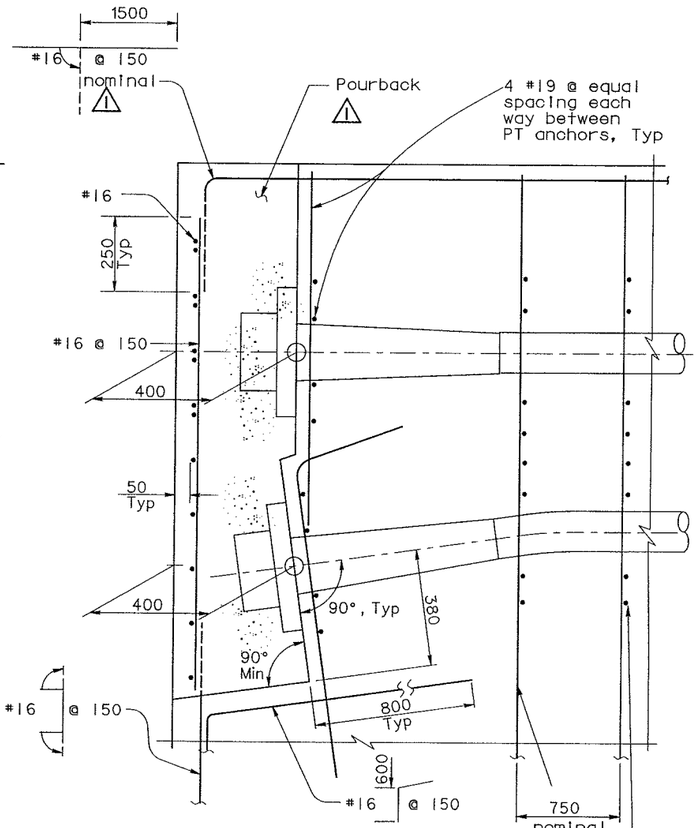

SECTION A-A
NTS
(Not all reinforcement shown for clarity)

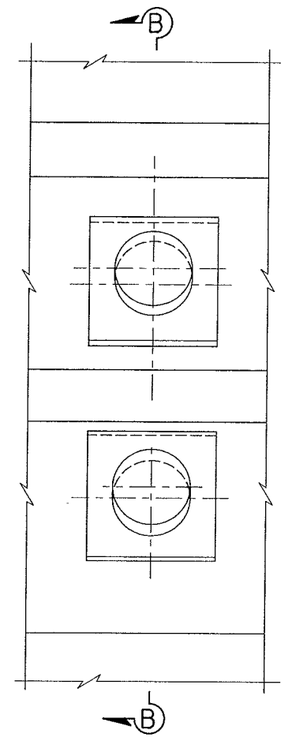

DETAIL B
NTS

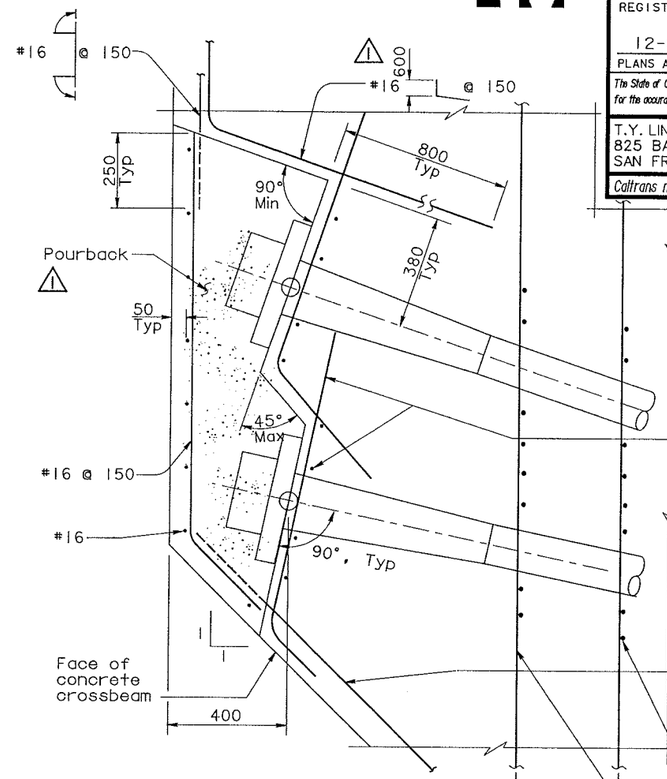

SECTION B-B
NTS
(Not all reinforcement shown for clarity)

4 #36 @ equal spacing between PT (see Note 8)

2 #36 @ equal spacing between PT (see Note 8)

4 #36 @ equal spacing between PT (see Note 8)

2 #36 @ equal spacing between PT (see Note 8)

NOTES:

1. For PT tendon plans and crossbeam elevation, see "Pier E2 Details No.5" sheet.
2. For pier E2 column elevation, see "Pier E2 Details No.2" sheet.
3. All PT tendons are 55-15 Dia.
4. Local confining reinforcement (not shown for clarity) per tendon anchor shall be provided by PT hardware supplier.
5. For additional prestressing details, see "Prestressing Notes" sheet.
6. Block-out geometry reflects standard post-tensioning industry requirements. Actual post-tensioning system dimensions may vary; final block-out geometry shall be reviewed and approved by the Engineer.
7. Post-tensioning anchorage details reflect industry standard geometry. Actual dimensions may vary depending on supplier. It shall be Contractor's responsibility to accomodate the actual system to plan geometry.
8. Contractor may vary spacing and size to clear other reinforcement, such that the equivalent steel is provided.

MARK	DATE	DESCRIPTIONS	BY	CH'D
1	07/21/06	E2 CAP BEAM ISD	AS	NV

REVISIONS

CONTRACT CHANGE ORDER NO. _____
SHEET ____ OF ____

ALL DIMENSIONS ARE IN MILLIMETERS UNLESS OTHERWISE SHOWN

R. Vaizadeh/V. Toan/Y.L./W.L./F.C.
DESIGN OVERSIGHT
SIGN OFF DATE 07/21/06

Rev. Date: 5-18-98

DESIGN	BY A. Sanjines	CHECKED J. Chan	
DETAILS	BY R. Xu	CHECKED J. Chan	
QUANTITIES	BY C. Bernardo	CHECKED B. Mason	

PREPARED FOR THE STATE OF CALIFORNIA DEPARTMENT OF TRANSPORTATION

R. Manzanarez
PROJECT ENGINEER

BRIDGE NO. 34-0006L/R
KILOMETER POST 13.2/13.9

SAN FRANCISCO OAKLAND BAY BRIDGE
EAST SPAN SEISMIC SAFETY PROJECT
SELF-ANCHORED SUSPENSION BRIDGE
(SUPERSTRUCTURE & TOWER)

PIER E2 DETAILS NO. 8

ORIGINAL SCALE IN MILLIMETERS FOR REDUCED PLANS 0 10 20 30 40 50 60 70 80 90 100

CU 04
EA 0120F1

DISREGARD PRINTS BEARING EARLIER REVISION DATES

REVISION DATES (PRELIMINARY STAGE ONLY) 05/31/01 04/08/02 01/07/02 12/19/02

SHEET 100R1 OF

FILE => p:\bb\04-012001\sas readv august 2005\cco#23\depir06e.dgn

100 % PS&E

USERNAME => vlignatovski DATE PLOTTED => 14 JUL 2006 TIME PLOTTED => 14:50:39

DIST.	COUNTY	ROUTE	KILOMETER POST TOTAL PROJECT	SHEET NO.	TOTAL SHEETS
04	SF	80	13.2/13.9	519R1	1204

Caltrans Metric

REGISTERED ENGINEER - CIVIL

12-6-04

PLANS APPROVAL DATE

The State of California or its officers or agents shall not be responsible for the accuracy or completeness of electronic copies of this plan sheet.

REGISTERED PROFESSIONAL ENGINEER Alex E. Sanjines No. C 051153 Exp. 9/30/07 CIVIL STATE OF CALIFORNIA

T.Y. LIN / MOFFATT & NICHOL
825 BATTERY STREET
SAN FRANCISCO, CA 94111

Caltrans now has a web site! To get to the web site, go to: http://www.dot.ca.gov

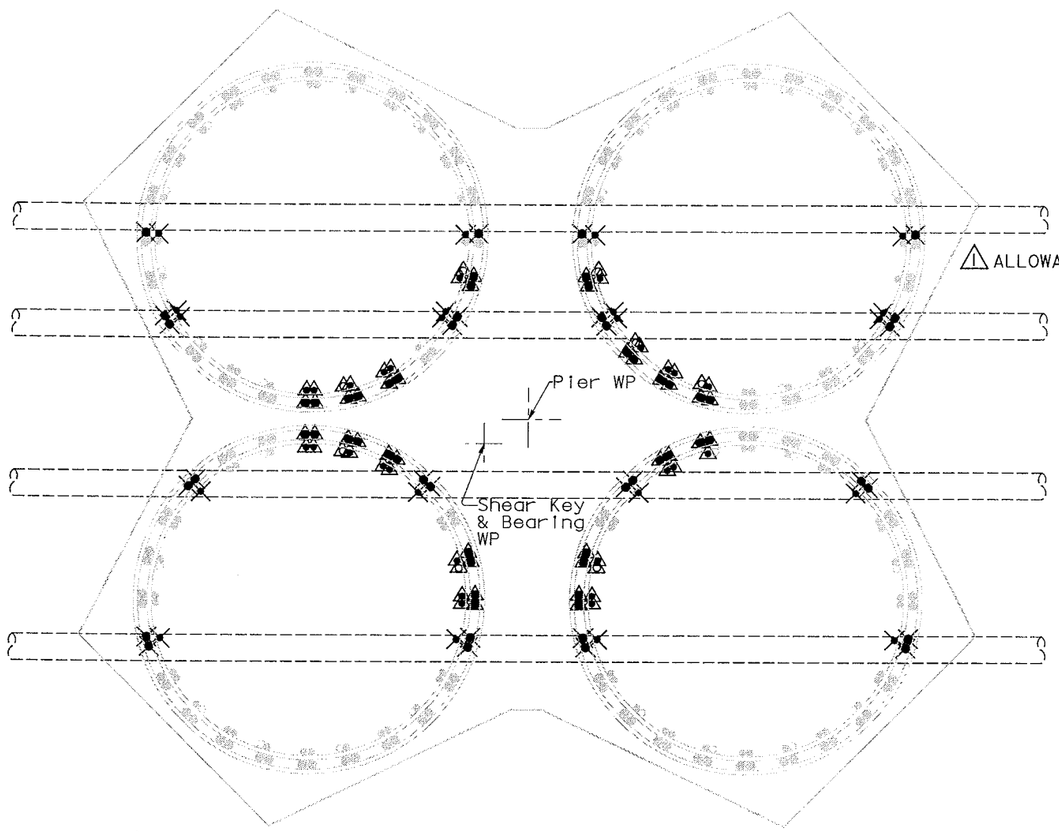

CUTOFF ALLOWANCE FOR COLUMN REINFORCEMENT

NTS

(Allowance shown is theoretical and is for information only. Not for construction). (see Note 2 thru 5)

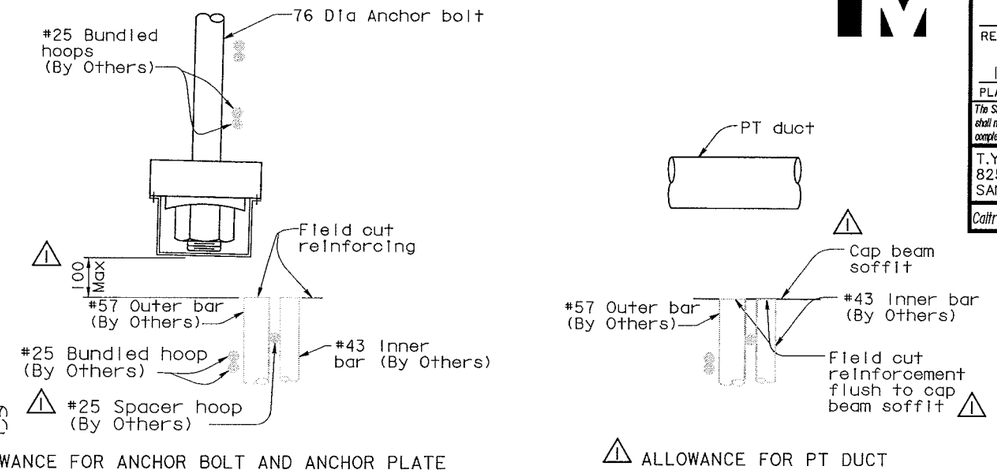

ALLOWANCE FOR ANCHOR BOLT AND ANCHOR PLATE

ALLOWANCE FOR PT DUCT

FIELD CUT DETAIL

NTS
(see Notes 2 thru 5)

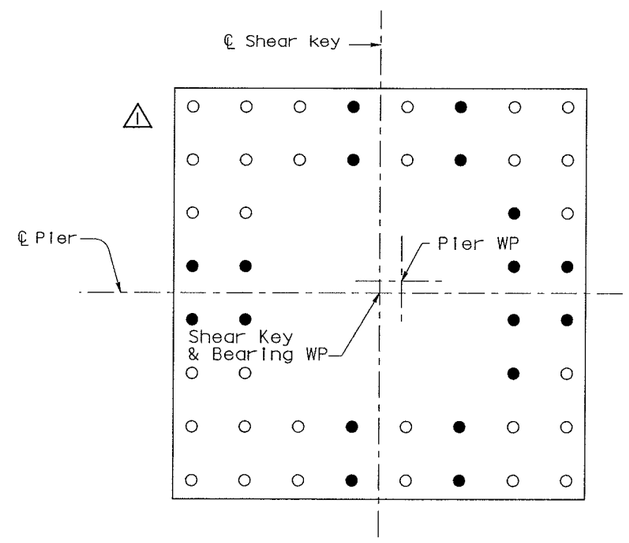

SECTION C-C

(Anchor bolt length layout)

1:20

LEGEND:

- o Anchor bolts length = L1
- ● Anchor bolts length = L2
- × Indicates #43 or #57 column reinforcement may be field cut below the ducts. See "Allowance for PT duct".
- △ Indicates #43 or #57 column reinforcement may be field cut below the anchor bolt or anchor PL. See "Allowance for anchor bolt and anchor plate".

NOTES:

1. Local confining spiral reinforcement for bearing HS bolts shall be provided by hardware suppliers; not shown for clarity.
2. Column reinforcement to be field surveyed.
3. Rotate anchor plates as necessary to clear column reinforcement.
4. Contractor may field cut existing column reinforcement marked with X or △ to clear PT ducts and shear key anchor bolt/anchor plate. See Field Cut Detail.
5. Prior to cutting any column reinforcement, the Contractor is required to submit locations and number of bars to be field cut for Engineer's review and approval.

MARK	DATE	DESCRIPTIONS	BY	CH'D
1	07/21/06	E2 CAP BEAM ISD	AS	NV

REVISIONS

CONTRACT CHANGE ORDER NO. _____
SHEET ____ OF ____

ALL DIMENSIONS ARE IN MILLIMETERS UNLESS OTHERWISE SHOWN

SAN FRANCISCO OAKLAND BAY BRIDGE
EAST SPAN SEISMIC SAFETY PROJECT
SELF-ANCHORED SUSPENSION BRIDGE
(SUPERSTRUCTURE & TOWER)

PIER E2 DETAILS NO. 10

R. Valizadeh/V. Toan/Y.L./W.L./F.C.
DESIGN OVERSIGHT
SIGN OFF DATE 07/21/06

	BY	CHECKED
DESIGN	A. Sanjines	J. Chan
DETAILS	R. Xu	J. Chan
QUANTITIES	C. Bernardo	B. Mason

PREPARED FOR THE STATE OF CALIFORNIA DEPARTMENT OF TRANSPORTATION

R. Manzanarez
PROJECT ENGINEER

BRIDGE NO. 34-0006L/R
KILOMETER POST 13.2/13.9

Rev. Date: 5-18-98

ORIGINAL SCALE IN MILLIMETERS FOR REDUCED PLANS 0 10 20 30 40 50 60 70 80 90 100

CU 04
EA 0120F1

DISREGARD PRINTS BEARING EARLIER REVISION DATES

REVISION DATES (PRELIMINARY STAGE ONLY) 05/31/01 04/08/02 07/01/02 12/13/02 05/16/03 12/07/05

SHEET 102R1 OF

FILE => p:\bb\04-012001\sas readv august 2005\cco#23\aepir08-r1.dgn

100 % PS&E

USERNAME => vignatovs DATE PLOTTED => 14 JUL 2006 TIME PLOTTED => 14:51:37

DIST.	COUNTY	ROUTE	KILOMETER POST TOTAL PROJECT	SHEET NO.	TOTAL SHEETS
04	SF	80	13.2/13.9	98IRI	1204

REGISTERED ENGINEER - CIVIL

12-6-04

PLANS APPROVAL DATE

REGISTERED PROFESSIONAL ENGINEER John Sun No. C 54648 Exp. 12/31/05 CIVIL STATE OF CALIFORNIA

The State of California or its officers or agents shall not be responsible for the accuracy or completeness of electronic copies of this plan sheet.

T.Y. LIN / MOFFATT & NICHOL
825 BATTERY STREET
SAN FRANCISCO, CA 94111

To get to the web site, go to: http://www.dot.ca.gov

Caltrans Metric

POST-TENSIONING CHARACTERISTICS ASSUMED FOR DESIGN

1. Prestressing strand
   - Friction curvature coefficient : 0.20
   - Friction wobble coefficient : 0.0007/m
   - Anchor set : 6 mm
2. Prestressing epoxy-coated monostrand (Tie-down cables only)
   - Friction curvature coefficient : N/A
   - Friction wobble coefficient : 0.0007/m
   - Anchor set : 6 mm
3. High strength rods (where applicable)
   - Friction curvature coefficient : 0.25
   - Friction wobble coefficient : 0.0007/m
   - Anchor set : 2 mm
4. High strength PT rod (75 mm)
   - Friction curvature coefficient : 0.25
   - Friction wobble coefficient : 0.0012/m
   - Anchor set : 2 mm
5. Prestressing strands shall conform to ASTM A416, low relaxation, 7-wire strands, with guaranteed minimum ultimate strength of 1860 MPa.
6. Prestressing epoxy-coated monostrands shall conform to ASTM A416, low relaxation, 7-wire strands, with guaranteed minimum ultimate strength of 1860 MPa.
7. High strength rods (ASTM A354 Grade BD) shall have a guaranteed minimum ultimate strength of 965 MPa.
8. High strength rods (ASTM A354 Grade BC) shall have a guaranteed minimum ultimate strength of 793 MPa.
9. High strength rods (ASTM A722) shall have a guaranteed minimum ultimate strength of 1030 MPa.
10. High strength PT rods (75 mm) shall have a guaranteed minimum ultimate strength of 1030 MPa.

PRETENSIONING/GROUTING SEQUENCE

1. The pretensioning and grouting sequence of the Pier W2 prestressing strand tendons and of the Pier W2 high strength anchor rods (anchor bolts) shall be included with the Contractor's erection plan. The Contractor shall submit the erection plan along with the pretensioning and grouting sequence to the Engineer for review and approval.
2. The pretensioning and grouting sequence of the Pier T1 (Tower) high strength anchor rods (anchor bolts) shall be included with the Contractor's erection plan. The Contractor shall submit the erection plan along with the pretensioning and grouting sequence to the Engineer for review and approval.
3. The pretensioning and grouting sequence of the Pier E2 prestressing strand tendons and of the Pier E2 Bearing and Pier E2 Shear Key high strength anchor rods (anchor bolts) shall be included with the Contractor's erection plan. The Contractor shall submit the erection plan along with the pretensioning and grouting sequence to the Engineer for review and approval.

STRESSING FORCE LIMITS

1. All high strength anchor rods (anchor bolts) shall be pretensioned by jacking to 70% of their ultimate tensile strength, unless noted otherwise.
2. Force in all permanent high strength prestressing tendons shall not exceed 70% of the guaranteed minimum ultimate strength of the tendon after seating.
3. Force in all permanent high strength rods (anchor bolts) shall not exceed 70% of the guaranteed minimum ultimate strength of the bar after seating.

CONCRETE

1. A minimum compressive strength of 36 MPa (f'ci) shall be attained in the concrete of Pier W2 and Pier E2 crossbeams prior to stressing.

HIGH STRENGTH NONSHRINK GROUT

1. All high strength nonshrink grout shall attain a minimum compressive strength of f'ci=75% f'c (MPa) prior to being subjected to subsequent loading and before pretensioning operations.

PT DUCTS

1. Ducts for prestressing strand tendons and high strength rods (anchor bolts) shall consist of galvanized corrugated steel ducts, unless noted otherwise.
2. Prebent ducts shall be used for prestressing tendons with radius less than 10 m.
3. Prestressing strand tendon suppliers shall provide and use extra strong steel pipes (ASTM A53 Type S, Grade B (fy = 240 MPa) and necessary hardware connecting the steel pipes to galvanized corrugated steel ducts where radius of PT ducts is less than 5000 mm.
4. Based on the Contractor's stressing sequence, local strengthening of PT ducts (e.g. extra strong steel pipes) at critical location's may be required.

GROUT FOR PT DUCTS/PIPE SLEEVES

1. Tie-down cables with epoxy-coated monostrands shall not be grouted.
2. Ducts shall be grouted with nonshrink grout (f'c=60 MPa).
3. Nonshrink grout shall attain a strength of 36 MPa (f'ci) minimum before being subjected to stresses due to subseqent loading.

BLOCKOUT CONCRETE

1. After completion of all pretensioning and grouting operations, the blockout closure reinforcement shall be bent into place over the anchors before the blockouts are filled with concrete (f'c=60 MPa).

REGISTERED PROFESSIONAL ENGINEER Marwan N. Nader No. C 054426 Exp. 12/31/07 CIVIL STATE OF CALIFORNIA

FOR REVISIONS ONLY

MARK	DATE	DESCRIPTIONS	BY	CH'D
1	07/21/06	CONCRETE STRENGTH, ISD	MN	NV

REVISIONS

CONTRACT CHANGE ORDER NO. ____
SHEET ____ OF ____

100% PS&E

ALL DIMENSIONS ARE IN MILLIMETERS UNLESS OTHERWISE SHOWN

R. Vaizadeh/V. Toan/Y.L./W.L./F.C.
DESIGN OVERSIGHT
SIGN OFF DATE 07/21/06

	BY	CHECKED
DESIGN	J. Sun	J. Duxbury
DETAILS	J. Sun	J. Duxbury
QUANTITIES	J. Sun	J. Duxbury

PREPARED FOR THE STATE OF CALIFORNIA DEPARTMENT OF TRANSPORTATION

R. Manzanarez
PROJECT ENGINEER

BRIDGE NO. 34-0006L/R
KILOMETER POST 13.2/13.9

SAN FRANCISCO OAKLAND BAY BRIDGE
EAST SPAN SEISMIC SAFETY PROJECT
SELF-ANCHORED SUSPENSION BRIDGE
(SUPERSTRUCTURE & TOWER)

PRESTRESSING NOTES

Rev. Date: 5-18-98

ORIGINAL SCALE IN MILLIMETERS FOR REDUCED PLANS 0 10 20 30 40 50 60 70 80 90 100

CU 04
EA 0120F1

DISREGARD PRINTS BEARING EARLIER REVISION DATES 01/04/02 01/07/02 12/19/02

SHEET 564RI OF

FILE => p:\bb\04-0120f1\sas readv august 2005\cco#23\agptn01.dgn

USERNAME => vignatovs DATE PLOTTED => 14 JUL 2006 TIME PLOTTED => 14:52:43