DIST.	COUNTY	ROUTE	KILOMETER POST TOTAL PROJECT	SHEET NO.	TOTAL SHEETS
04	SF	80	13.2/13.9	522R1	1204

REGISTERED ENGINEER - CIVIL

12-6-04
PLANS APPROVAL DATE

REGISTERED PROFESSIONAL ENGINEER John Sun No. C 54648 Exp. 12/31/05 CIVIL STATE OF CALIFORNIA

The State of California or its officers or agents shall not be responsible for the accuracy or completeness of electronic copies of this plan sheet.

T.Y. LIN / MOFFATT & NICHOL
825 BATTERY STREET
SAN FRANCISCO, CA 94111

Caltrans now has a web site! To get to the web site, go to: http://www.dot.ca.gov

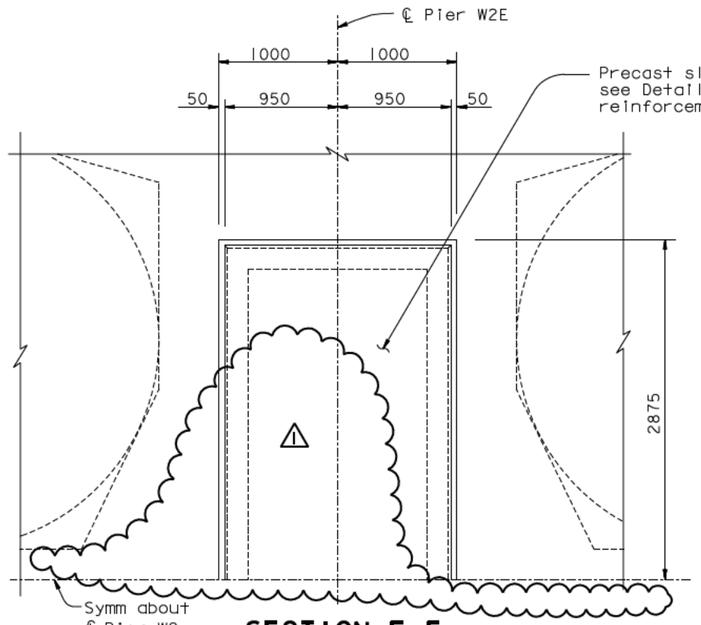

SECTION E-E
1:25

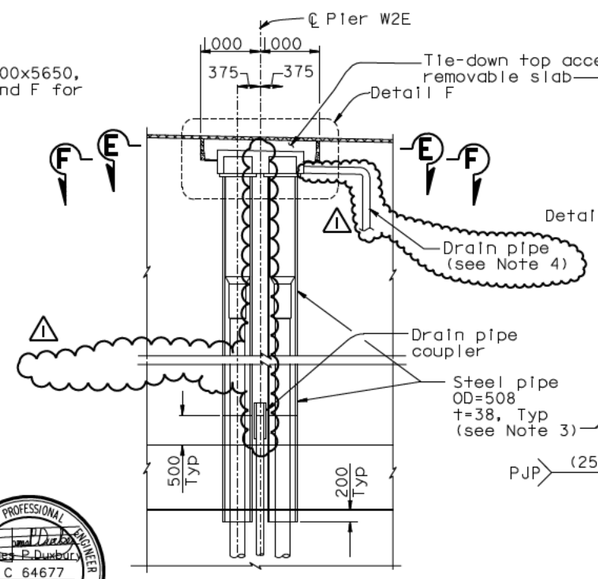

DETAIL A
1:50

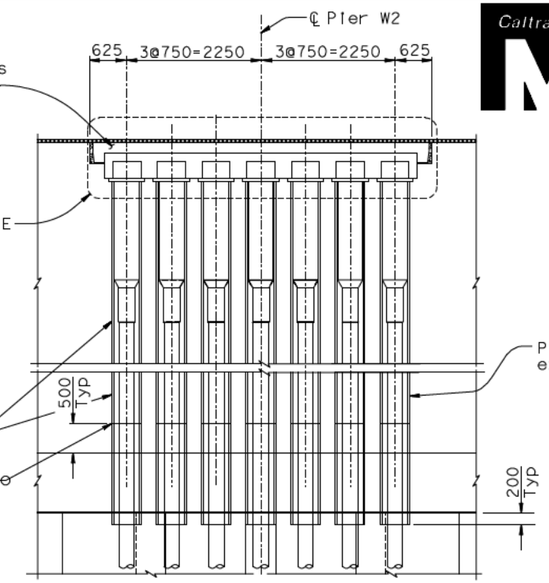

DETAIL B
1:50

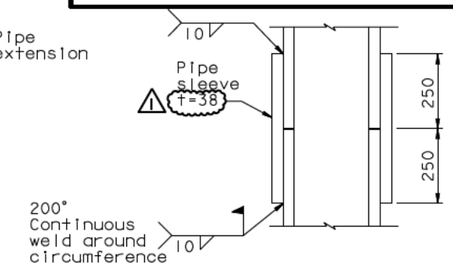

ALTERNATE CONNECTION FOR STEEL PIPE
1:10

REGISTERED PROFESSIONAL ENGINEER James P. Duxbury No. C 64677 Exp. 06/30/07 CIVIL STATE OF CALIFORNIA

FOR REVISIONS ONLY

MARK	DATE	DESCRIPTIONS	BY	CH'D	CCO#
1	07/21/06	W2 CAP BEAM ISD	JD	NV	23

REVISIONS

CONTRACT CHANGE ORDER NO. ____
SHEET ___ OF ___

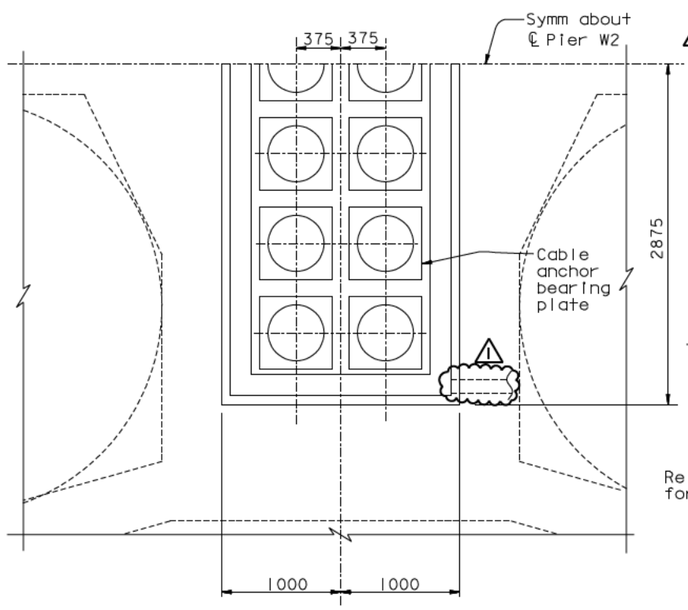

SECTION F-F
1:25

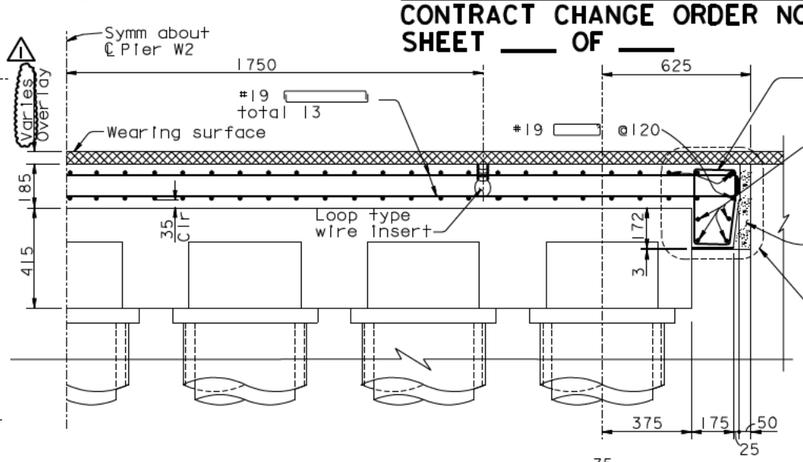

DETAIL E
1:12.5

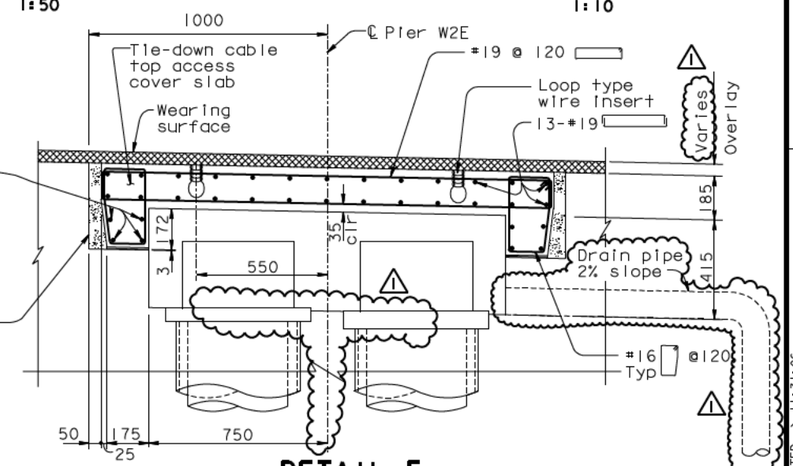

DETAIL F
1:12.5

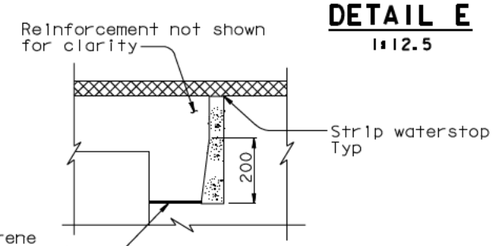

DETAIL G
1:10

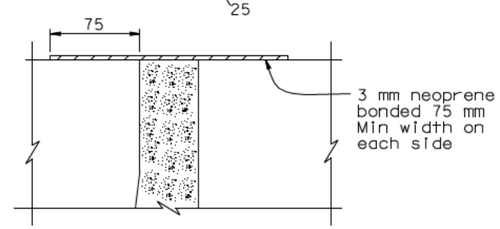

STRIP WATERSTOP DETAIL
1:2.5

NOTES:

1. For additional details, see "Cable Tie-down Details No. 1" sheet.
2. Concrete for the precast slab should be f'c=60 MPa at 28 days.
3. Steel pipe shall be ASTM A709 M Grade 345 unless specified otherwise.
4. Drain pipe shall be spliced to the drain pipe provided by the Self-Anchored Suspension Bridge (W2) Contract (by Others). Drain shall be placed at the low point of the tie-down access. The Contractor may adjust location of the drain inlet to accommodate reinforcement and cap beam postensioning.

ALL DIMENSIONS ARE IN MILLIMETERS UNLESS OTHERWISE SHOWN

SAN FRANCISCO OAKLAND BAY BRIDGE
EAST SPAN SEISMIC SAFETY PROJECT
SELF-ANCHORED SUSPENSION BRIDGE (SUPERSTRUCTURE & TOWER)

CABLE TIE-DOWN DETAILS NO. 3

R. Valizadeh/V. Toan/Y.L./W.L./F.C.
DESIGN OVERSIGHT
SIGN OFF DATE 07/21/06

	BY	CHECKED
DESIGN	J. Sun	J. Straski
DETAILS	S. Shi	J. Straski
QUANTITIES	J. Duxbury	S. Shi

PREPARED FOR THE STATE OF CALIFORNIA DEPARTMENT OF TRANSPORTATION

R. Manzanarez
PROJECT ENGINEER

BRIDGE NO. 34-0006L/R
KILOMETER POST 13.2/13.9

CU 04
EA 0120F1

DISREGARD PRINTS BEARING EARLIER REVISION DATES

REVISION DATES (PRELIMINARY STAGE ONLY): 05/15/99 08/02/99 05/31/01 04/08/02 07/09/02 12/20/02 12/01/05

SHEET 105R1 OF

Rev. Date: 5-18-98

ORIGINAL SCALE IN MILLIMETERS FOR REDUCED PLANS 0 10 20 30 40 50 60 70 80 90 100

FILE -> I:\bb\04-012001\sas\contract plans and cco\cco\cco#23\aeptd03.dgn

USERNAME -> vlignatova DATE PLOTTED => 10 MAY 2007 TIME PLOTTED => 11:31:06

100 % PS&E