Caltrans now has a web site! To get to the web site, go to: http://www.dot.ca.gov

DIST.	COUNTY	ROUTE	KILOMETER POST TOTAL PROJECT	SHEET No.	TOTAL SHEETS
04	SF	80	13.2/13.9	497S25	1204

REGISTERED ENGINEER - CIVIL
12-6-04
PLANS APPROVAL DATE
REGISTERED PROFESSIONAL ENGINEER John Sun No. C 54648 Exp. 12/31/05 CIVIL STATE OF CALIFORNIA

The State of California or its officers or agents shall not be responsible for the accuracy or completeness of electronic copies of this plan sheet.

Caltrans Metric

T.Y. LIN / MOFFATT & NICHOL
825 BATTERY STREET
SAN FRANCISCO, CA 94111

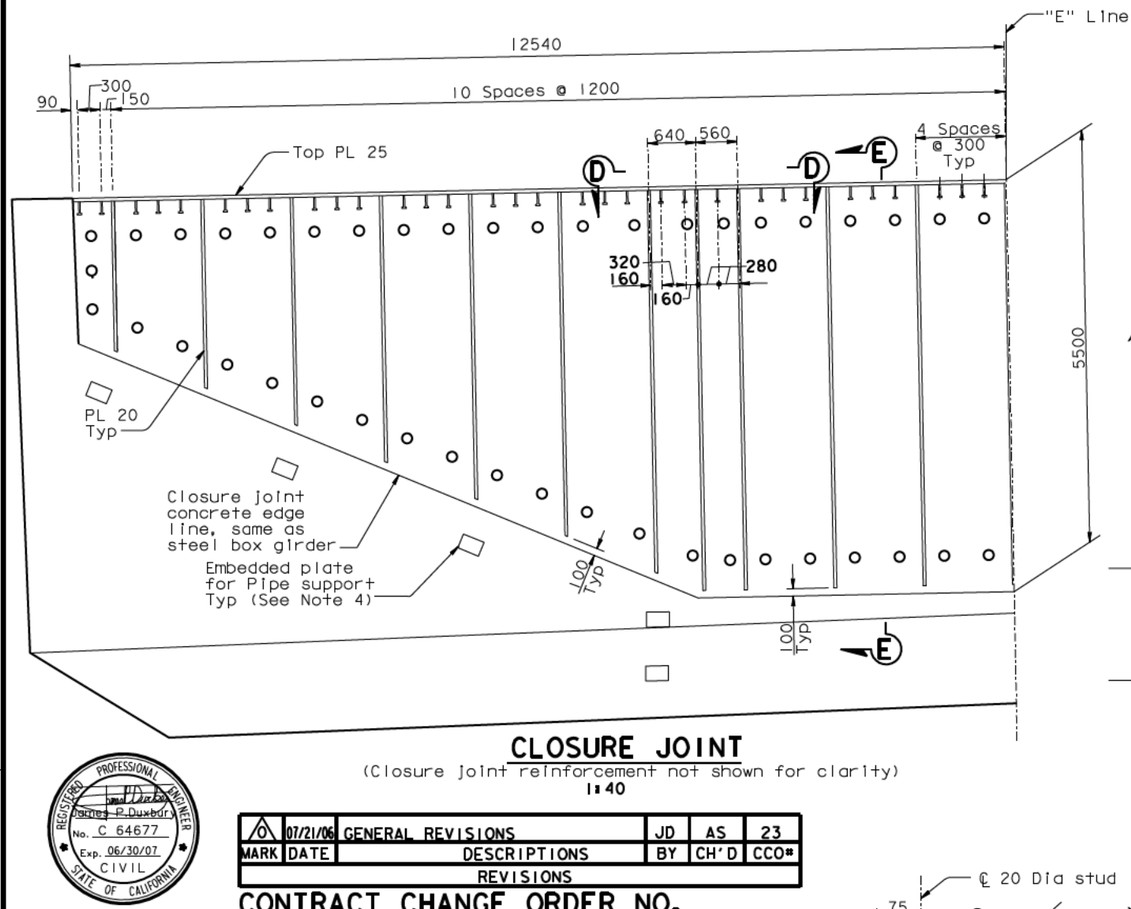

CLOSURE JOINT

(Closure joint reinforcement not shown for clarity)

1:40

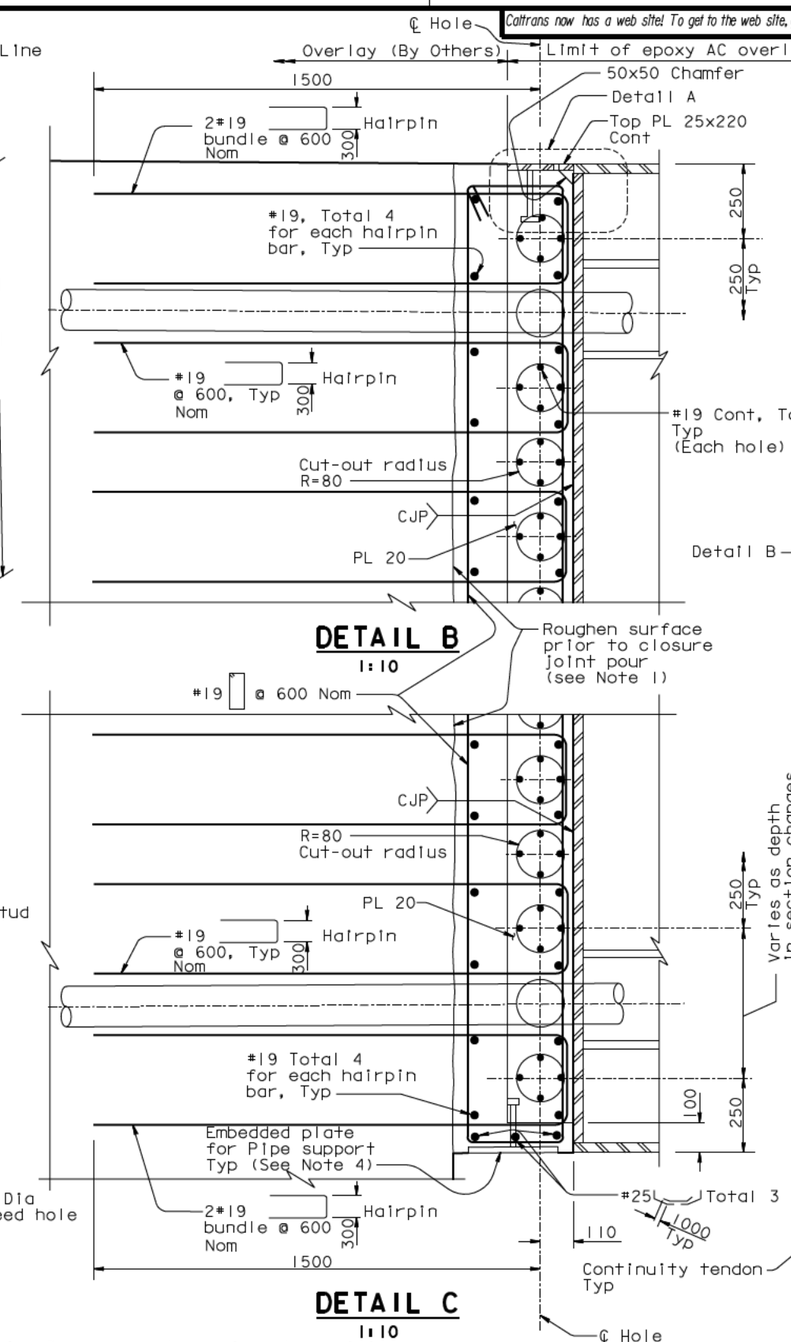

DETAIL B

1:10

DETAIL C

1:10

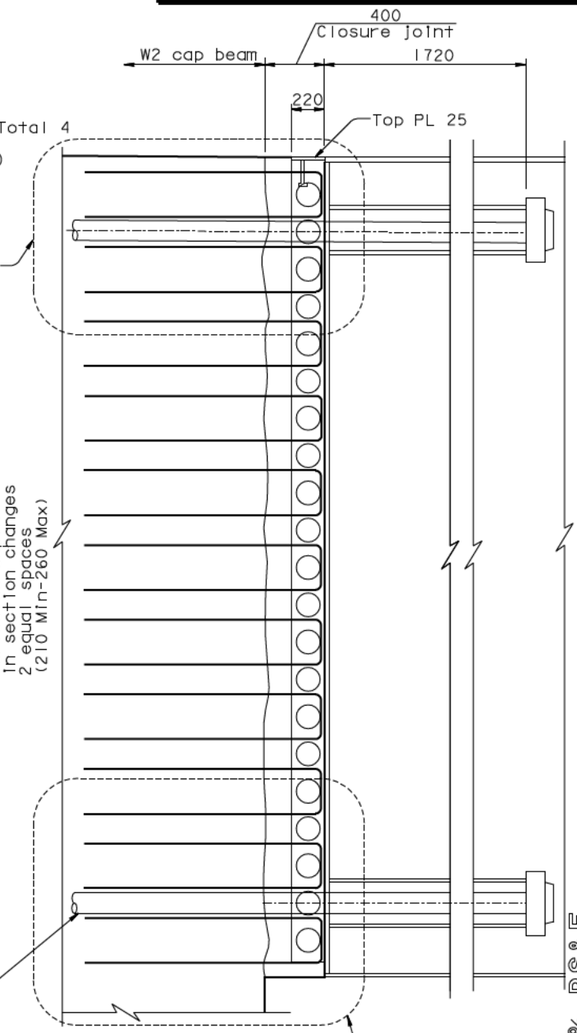

SECTION E-E

1:20

MARK	DATE	DESCRIPTIONS	BY	CH'D	CCO#
0	07/21/06	GENERAL REVISIONS	JD	AS	23

REVISIONS

REGISTERED PROFESSIONAL ENGINEER Charles P. Duxbury No. C 64677 Exp. 06/30/07 CIVIL STATE OF CALIFORNIA

FOR REVISIONS ONLY

CONTRACT CHANGE ORDER NO. ____
SHEET ___ OF ___

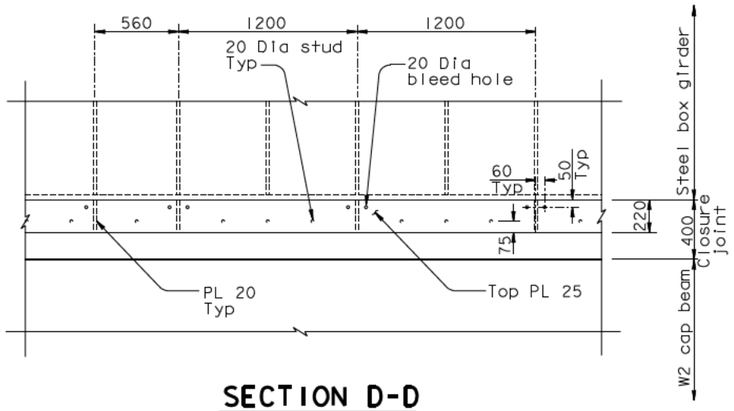

SECTION D-D

(Closure joint reinforcement not shown for clarity)

1:20

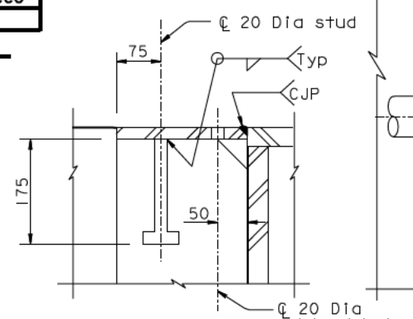

DETAIL A

1:5

NOTES:

1. Roughen the existing W2 Cap Beam concrete surface to a minimum of 5 mm amplitude prior to pouring the closure joint.
2. Reinforcement spacing shall be adjusted to avoid PT ducts if required.
3. All plate shall be ASTM A709M HPS 485W, unless specified otherwise.
4. For pipe support locations and details, see "Road Plans".

ALL DIMENSIONS ARE IN MILLIMETERS UNLESS OTHERWISE SHOWN

R. Valizadeh/V. Toan/Y.L./W.L./F.C.
DESIGN OVERSIGHT
SIGN OFF DATE 07/21/06

	BY	CHECKED
DESIGN	J. Sun	M. Chen
DETAILS	J. Duxbury	M. Chen
QUANTITIES	S. Shi	D. Harrison

PREPARED FOR THE STATE OF CALIFORNIA DEPARTMENT OF TRANSPORTATION

R. Manzanarez
PROJECT ENGINEER

BRIDGE NO. 34-0006L/R
KILOMETER POST 13.2/13.9

SAN FRANCISCO OAKLAND BAY BRIDGE
EAST SPAN SEISMIC SAFETY PROJECT
SELF-ANCHORED SUSPENSION BRIDGE
(SUPERSTRUCTURE & TOWER)

W2 CAP BEAM REINFORCEMENT DETAILS NO. 49

Rev. Date: 5-18-98

ORIGINAL SCALE IN MILLIMETERS FOR REDUCED PLANS 0 10 20 30 40 50 60 70 80 90 100

CU 04
EA 0120F1

DISREGARD PRINTS BEARING EARLIER REVISION DATES 07/21/06

SHEET 080S25 OF

FILE -> I:\bb\04-012001\sas\contract plans and cco\cco\cco#23\aecap48r-s.dgn

100 % PS&E

USERNAME => virgnatovs DATE PLOTTED => 10 MAY 2007 TIME PLOTTED => 10:37:04