DIST.	COUNTY	ROUTE	KILOMETER POST TOTAL PROJECT	SHEET NO.	TOTAL SHEETS
04	SF	80	13.2/13.9	651R1	1204

Caltrans Metric

George Baker
REGISTERED ENGINEER - CIVIL

1-27-03
PLANS APPROVAL DATE

The State of California or its officers or agents shall not be responsible for the accuracy or completeness of electronic copies of this plan sheet.

REGISTERED PROFESSIONAL ENGINEER George S. Baker No. C57112 Exp. 12/31/07 CIVIL STATE OF CALIFORNIA

T.Y. LIN / MOFFATT & NICHOL
825 BATTERY STREET
SAN FRANCISCO, CA 94111

To get to the web site, go to http://www.dot.ca.gov

MARK	DATE	DESCRIPTIONS	BY	CH'D	CCO#
1	07/21/06	DELETE WELD CALLOUT	GB	NV	22

REVISIONS

CONTRACT CHANGE ORDER NO. ____
SHEET ____ OF ____

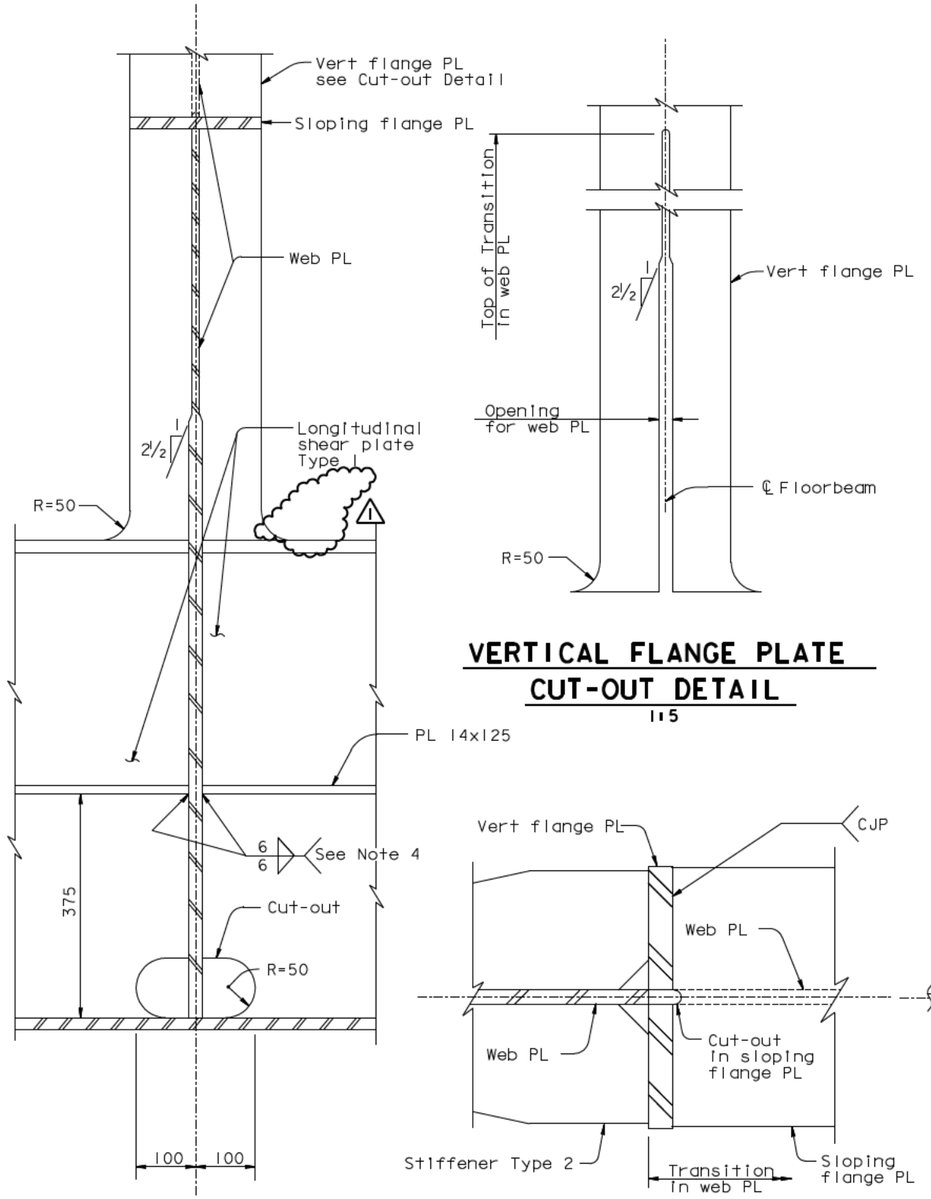

VERTICAL FLANGE PLATE CUT-OUT DETAIL
1:5

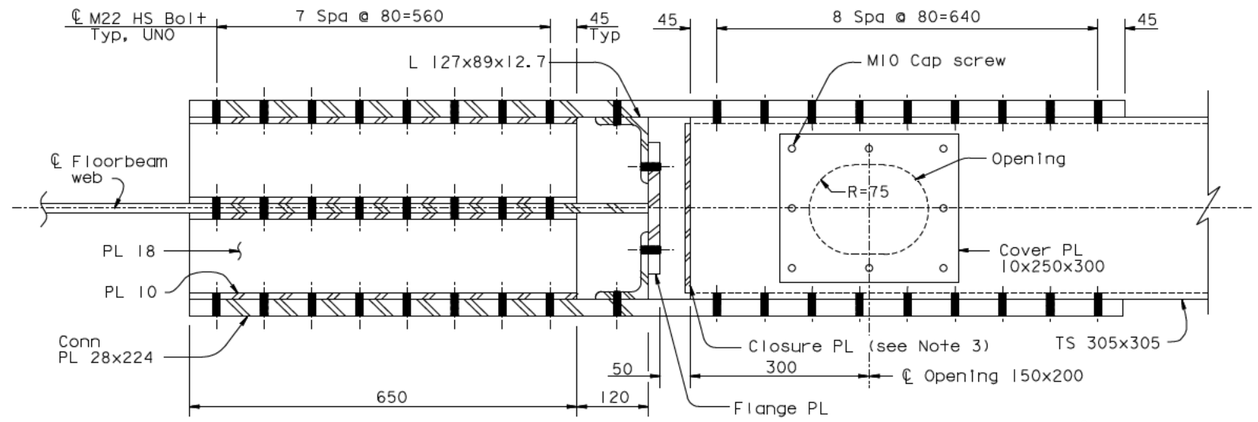

SECTION G-G
1:5

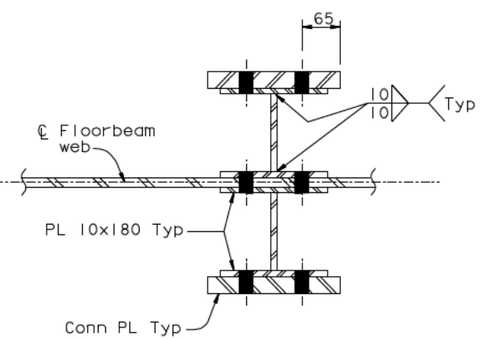

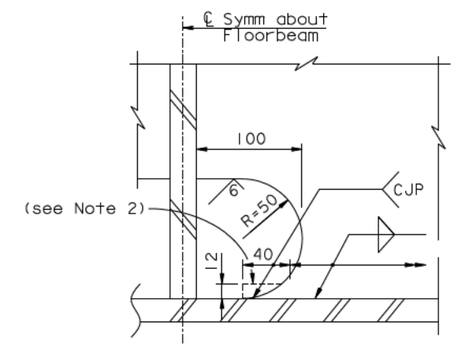

CUTOUT DETAIL
1:2.5

4 SECTION F-F
1:5

SECTION E-E
1:2.5

SECTION H-H
1:5

NOTES:

1. For location of Sections E-E, F-F, G-G and H-H, see Detail D on "Typical Floorbeam Details No.5" sheet.
2. Grind off end of CJP welds. Provide 12 mm trailer with transition to cut-out. See similar Detail A on "Typical Girder Details No.4" sheet. Grind opening to 6 Micron finish in accordance with ANSI B46.1.
3. For closure plate details, see "Typical Floorbeam Details No.7" sheet.
4. Weld shall be CJP in SPCM zone.

4 REVISED PER ADDENDUM NO. 4 DATED DECEMBER 9, 2005

4

ALL DIMENSIONS ARE IN MILLIMETERS UNLESS OTHERWISE SHOWN

SAN FRANCISCO OAKLAND BAY BRIDGE
EAST SPAN SEISMIC SAFETY PROJECT
SELF-ANCHORED SUSPENSION BRIDGE
(SUPERSTRUCTURE & TOWER)

TYPICAL FLOORBEAM DETAILS NO.6

R. Valizadeh/V. Toan/Y.L./W.L./F.C.
DESIGN OVERSIGHT
Roger Valizadeh / Vong Toan / Y. Liu
SIGN OFF DATE 07/21/06

	BY	CHECKED
DESIGN	G. Baker	P. Ritchie
DETAILS	S. Camo	T. McMeans
QUANTITIES	C. Mauch	M. Roberts

PREPARED FOR THE STATE OF CALIFORNIA DEPARTMENT OF TRANSPORTATION

R. Manzanarez
PROJECT ENGINEER

BRIDGE NO. 34-0006L/R
KILOMETER POST 13.2/13.9

Rev. Date: 5-18-98

ORIGINAL SCALE IN MILLIMETERS FOR REDUCED PLANS 0 10 20 30 40 50 60 70 80 90 100

CU 04
EA 0120F1

DISREGARD PRINTS BEARING EARLIER REVISION DATES

REVISION DATES (PRELIMINARY STAGE ONLY) 03/29/00 05/31/01 04/08/02 07/01/02 12/19/02 11/13/05

SHEET 234R1 OF

FILE -> I:\bb\04-012001\sas\contract plans and cco\cco\cco#22\agftb04a.dgn

100 % PS&E

USERNAME => alishansky DATE PLOTTED => 04 JUN 2007 TIME PLOTTED => 09:02:10