DIST.	COUNTY	ROUTE	KILOMETER POST TOTAL PROJECT	SHEET NO.	TOTAL SHEETS
04	SF	80	13.2/13.9	629R1	1204

George Baker
REGISTERED ENGINEER - CIVIL
12-6-04
PLANS APPROVAL DATE

REGISTERED PROFESSIONAL ENGINEER George S. Baker No. C57112 Exp. 12/31/07 CIVIL STATE OF CALIFORNIA

The State of California or its officers or agents shall not be responsible for the accuracy or completeness of electronic copies of this plan sheet.

T.Y. LIN / MOFFATT & NICHOL
825 BATTERY STREET
SAN FRANCISCO, CA 94111

Caltrans now has a web site! To get to the web site, go to: http://www.dot.ca.gov

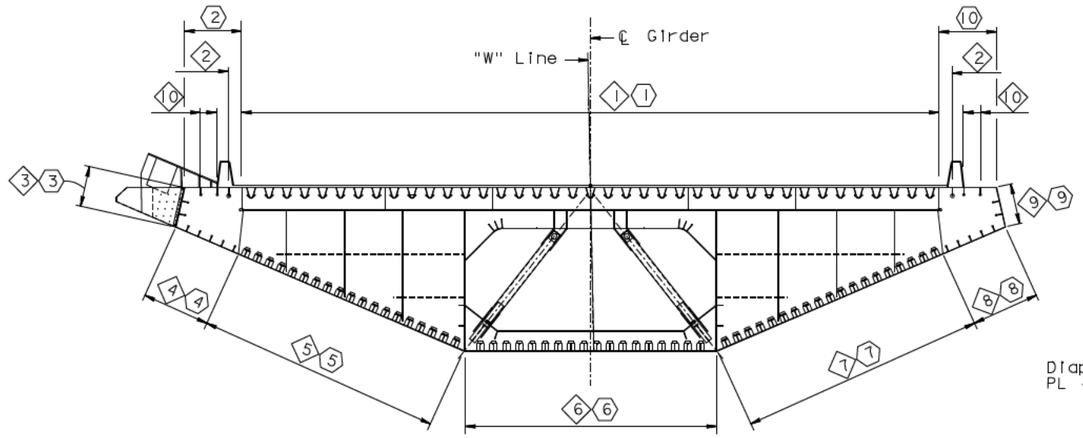

("W" LINE SECTION TYPE 1A SHOWN)

SECTION AT FLOORBEAM

1:100

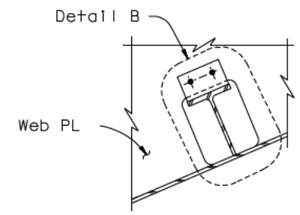

WT TYPE AT CROSSBEAM

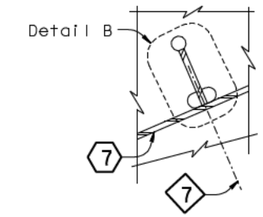

PLATE TYPE AT CROSSBEAM

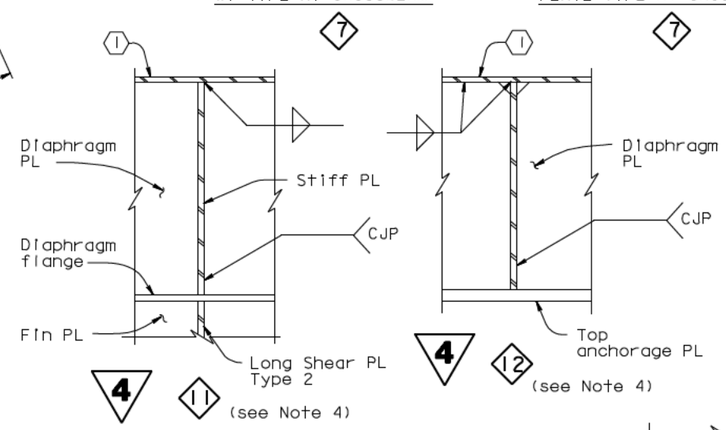

MARK	DATE	DESCRIPTIONS	BY	CH'D	CCO#
1	07/21/06	ADD STIFFENER TYPES 13 THRU 18	GB	NV	22

REVISIONS

CONTRACT CHANGE ORDER NO. ____
SHEET ___ OF ___

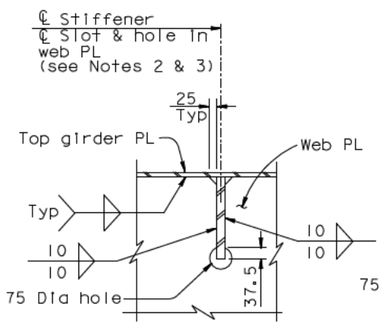

2

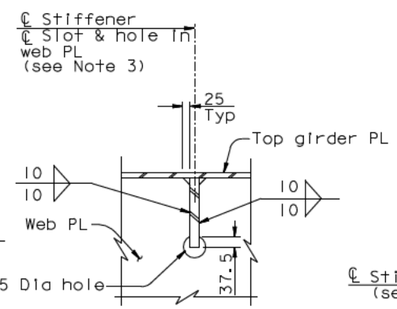

10 13 thru 18 1

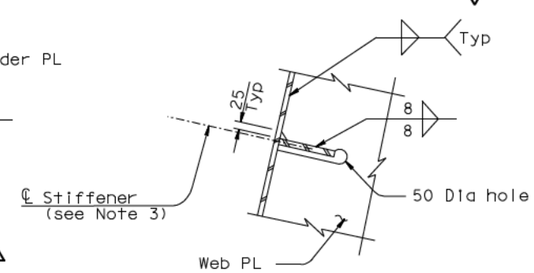

3 (see Note 5)

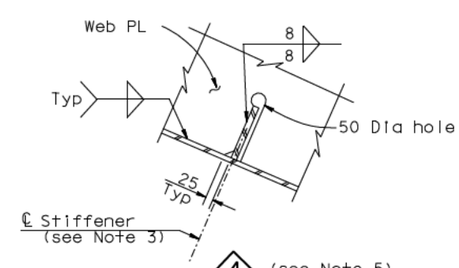

4 (see Note 5)

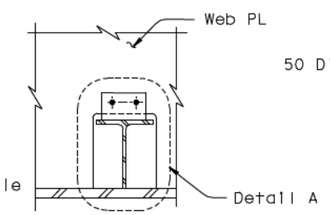

TYPICAL UNO

5 6 & 7 Except at crossbeam

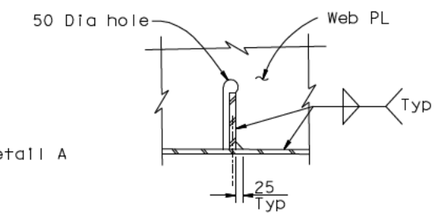

PLATE TYPE

5 6 & 7 Except at crossbeam

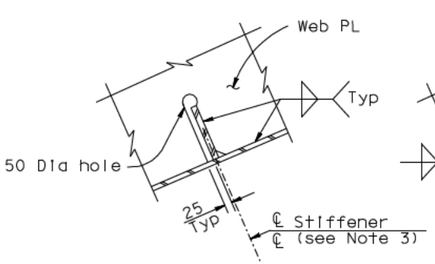

TYPICAL UNO

8

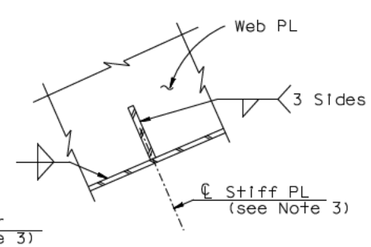

AT CROSSBEAM

8

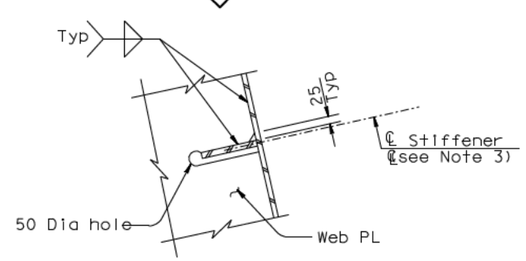

TYPICAL UNO

9

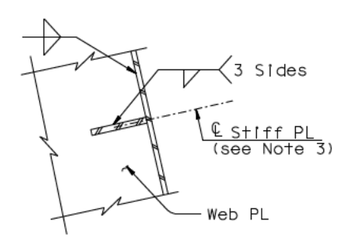

AT CROSSBEAM

9

STIFFENER DETAILS AT FLOORBEAM (see Note 3)

1:10

NOTES:

1. For Details A and B, see "Typical Girder Details No. 6" sheet.
2. For details at PP117 to PP121, see "Girder at East Transition Details No. 1" and "Girder At Pier E2 No. 9" sheets.
3. All typical girder stiffeners are continuous through floorbeam web except for 8 and 9 at crossbeam, and 1 typically, and unless otherwise specified in the plans.
4. 1 For locations of stiffener types 1 thru 18, see "Girder at East Transition" sheets.
5. Typical details for 3 and 4 shown. For details at suspender location, see "Typical Girder Details No. 6" sheet.

4 REVISED PER ADDENDUM NO. 4 DATED DECEMBER 9, 2005

ALL DIMENSIONS ARE IN MILLIMETERS UNLESS OTHERWISE SHOWN

R. Vallzadeh/V. Toan/Y.L./W.L./F.C.
DESIGN OVERSIGHT
Roya Vallzadeh / Vong P. Toan / Y. Liu
SIGN OFF DATE 07/21/06

	BY	CHECKED
DESIGN	G. Baker	P. Ritchie
DETAILS	S. Camo	T. McMeans
QUANTITIES	G. Baker	M. Roberts

PREPARED FOR THE STATE OF CALIFORNIA DEPARTMENT OF TRANSPORTATION

R. Manzanarez
PROJECT ENGINEER

BRIDGE NO. 34-0006L/R
KILOMETER POST 13.2/13.9

SAN FRANCISCO OAKLAND BAY BRIDGE
EAST SPAN SEISMIC SAFETY PROJECT
SELF-ANCHORED SUSPENSION BRIDGE (SUPERSTRUCTURE & TOWER)

TYPICAL GIRDER DETAILS NO. 5

Rev. Date: 5-18-98

ORIGINAL SCALE IN MILLIMETERS FOR REDUCED PLANS 0 10 20 30 40 50 60 70 80 90 100

CU 04
EA 0120F1

DISREGARD PRINTS BEARING EARLIER REVISION DATES

REVISION DATES (PRELIMINARY STAGE ONLY): 01/15/99 05/18/99 08/02/99 05/31/01 04/08/02 07/01/02 12/13/02 11/13/05

SHEET 212R1 OF

FILE -> I:\bb\04-012001\sas\contract plans and cco\cco\cco22\agdkd03a.dgn

100% PS&E

USERNAME => olishansk DATE PLOTTED => 04 JUN 2007 TIME PLOTTED => 09:05:22