DIST.	COUNTY	ROUTE	KILOMETER POST TOTAL PROJECT	SHEET NO.	TOTAL SHEETS
04	SF	80	13.2/13.9	651R1	1204

George Baker
REGISTERED ENGINEER - CIVIL
1-27-03
PLANS APPROVAL DATE

REGISTERED PROFESSIONAL ENGINEER George S. Baker No. C57112 Exp. 12/31/07 CIVIL STATE OF CALIFORNIA

The State of California or its officers or agents shall not be responsible for the accuracy or completeness of electronic copies of this plan sheet.

T.Y. LIN / MOFFATT & NICHOL
825 BATTERY STREET
SAN FRANCISCO, CA 94111

To get to the web site, go to http://www.dot.ca.gov

Caltrans Metric

MARK	DATE	DESCRIPTIONS	BY	CH'D
1	07/21/06	DELETE WELD CALLOUT	GB	NV

REVISIONS

CONTRACT CHANGE ORDER NO. _____
SHEET ____ OF ____

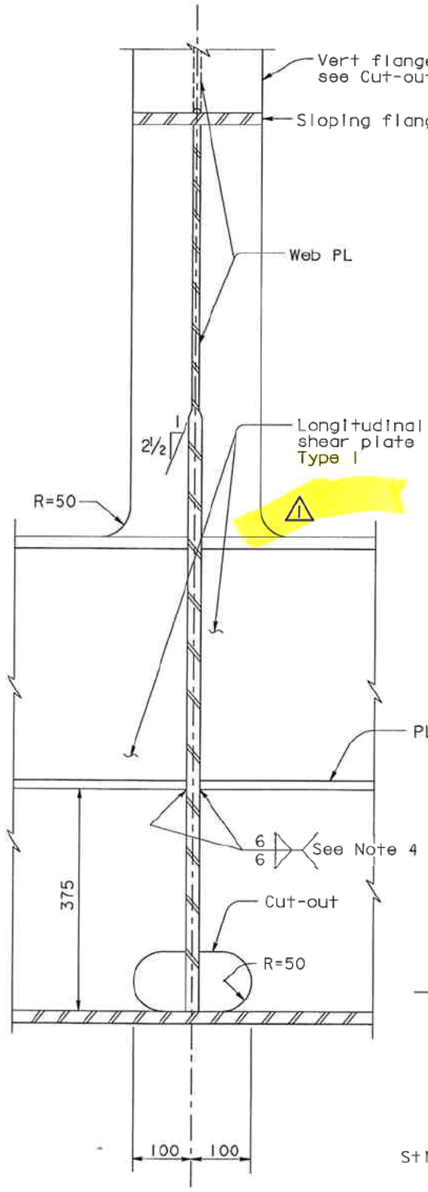

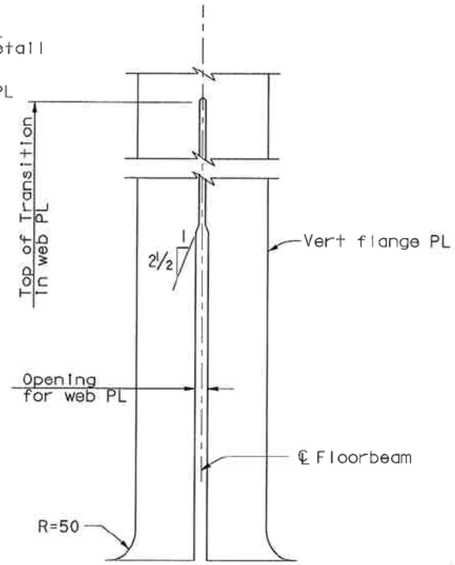

VERTICAL FLANGE PLATE CUT-OUT DETAIL
1:5

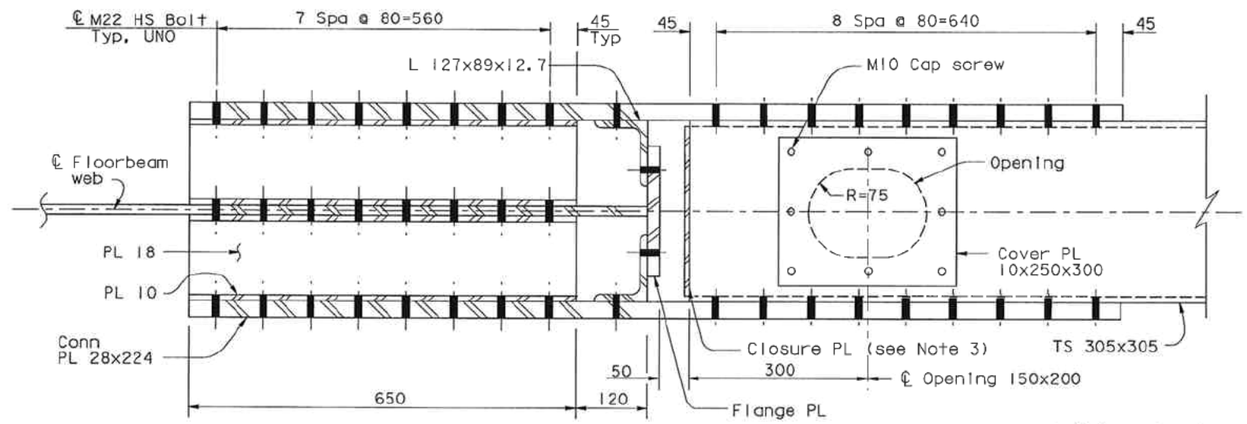

SECTION G-G
1:5

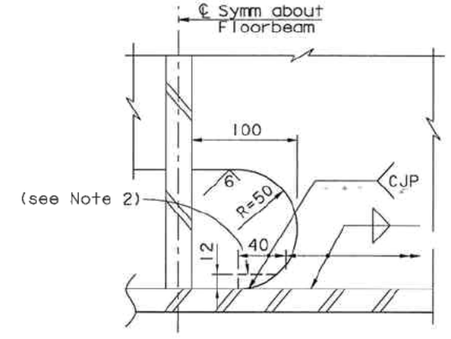

CUTOUT DETAIL
1:2.5

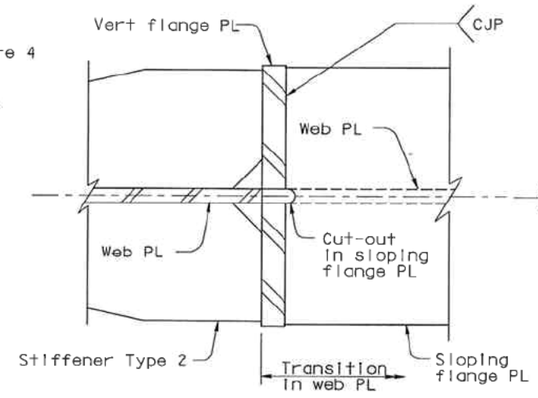

4 SECTION F-F
1:5

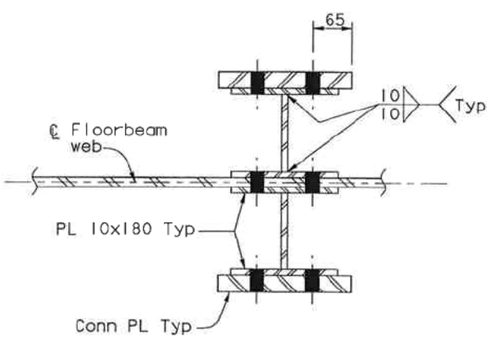

SECTION E-E
1:2.5

SECTION H-H
1:5

NOTES:

1. For location of Sections E-E, F-F, G-G and H-H, see Detail D on "Typical Floorbeam Details No.5" sheet.
2. Grind off end of CJP welds. Provide 12 mm trailer with transition to cut-out. See similar Detail A on "Typical Girder Details No.4" sheet. Grind opening to 6 Micron finish in accordance with ANSI B46.1.
3. For closure plate details, see "Typical Floorbeam Details No.7" sheet.
4. Weld shall be CJP in SPCM zone.

4 **REVISED PER ADDENDUM NO. 4 DATED DECEMBER 9, 2005**

4

ALL DIMENSIONS ARE IN MILLIMETERS UNLESS OTHERWISE SHOWN

SAN FRANCISCO OAKLAND BAY BRIDGE
EAST SPAN SEISMIC SAFETY PROJECT
SELF-ANCHORED SUSPENSION BRIDGE
(SUPERSTRUCTURE & TOWER)

TYPICAL FLOORBEAM DETAILS NO. 6

R. Vallizadeh/V. Toan/Y.L./W.L./F.C.
DESIGN OVERSIGHT
SIGN OFF DATE 07/21/06

	BY	CHECKED
DESIGN	G. Baker	P. Ritchie
DETAILS	S. Camo	T. McMeans
QUANTITIES	C. Mauch	M. Roberts

PREPARED FOR THE STATE OF CALIFORNIA DEPARTMENT OF TRANSPORTATION

R. Manzanarez
PROJECT ENGINEER

BRIDGE NO. 34-0006L/R
KILOMETER POST 13.2/13.9

CU 04
EA 0120F1

DISREGARD PRINTS BEARING EARLIER REVISION DATES

REVISION DATES (PRELIMINARY STAGE ONLY) 03/25/00 05/24/01 04/26/02 07/24/02 12/18/02 11/13/05

SHEET 234R1 OF

Rev. Date: 5-18-88

ORIGINAL SCALE IN MILLIMETERS FOR REDUCED PLANS 0 10 20 30 40 50 60 70 80 90 100

FILE => p:\bb\04-012001\sas readv august 2005\cco#22\ogftb04a.dgn

100 % PS&E

USERNAME => vlignotova DATE PLOTTED => 11 JUL 2006 TIME PLOTTED => 15:27:53