DIST.	COUNTY	ROUTE	KILOMETER POST TOTAL PROJECT	SHEET NO.	TOTAL SHEETS
04	SF	80	13.2/13.9	521R1	1204

Caltrans Metric

REGISTERED ENGINEER - CIVIL

12-6-04
PLANS APPROVAL DATE

REGISTERED PROFESSIONAL ENGINEER John Sun No. C 54648 Exp. 12/31/05 CIVIL STATE OF CALIFORNIA

The State of California or its officers or agents shall not be responsible for the accuracy or completeness of electronic copies of this plan sheet.

T.Y. LIN / MOFFATT & NICHOL
825 BATTERY STREET
SAN FRANCISCO, CA 94111

Caltrans now has a web site! To get to the web site, go to: http://www.dot.ca.gov

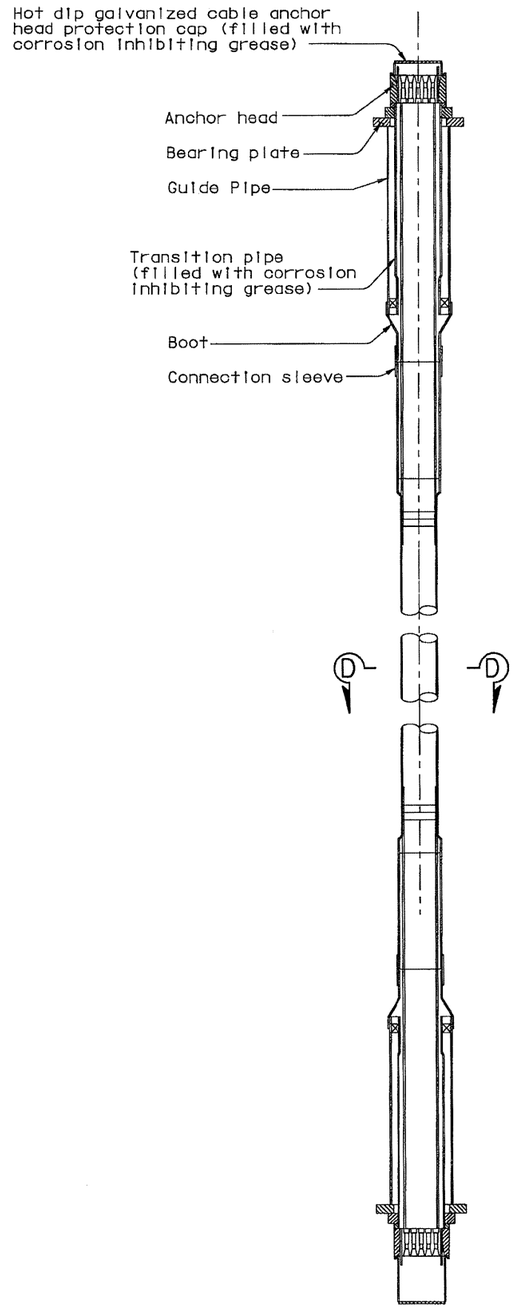

DEAD END

JACKING END

(For illustration only)

TIE-DOWN CABLE DETAILS
1:20

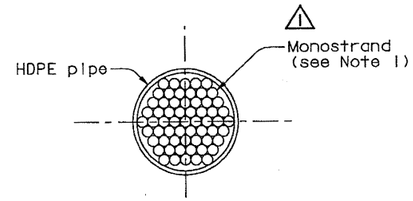

SECTION D-D
NTS

REGISTERED PROFESSIONAL ENGINEER Maryam N. Nader No. C 054426 Exp. 12/31/07 CIVIL STATE OF CALIFORNIA

FOR REVISIONS ONLY

MARK	DATE	DESCRIPTIONS	BY	CH'D
1	07/21/06	REMOVE EPOXY COATING	MN	NV

REVISIONS

CONTRACT CHANGE ORDER NO. 22
SHEET 6 OF 8

LEGEND:

HDPE - High density polyethylene.

NOTES:

1. Each individual monostrand shall be fully coated with corrosion inhibiting grease and then encapsulated by a high-density polyethylene (HDPE) or high-density polypropylene (HDPP) smooth sheath.

100 % PS&E

USERNAME => vignatovsi DATE PLOTTED => 19 JUL 2006 TIME PLOTTED => 08:43:19

ALL DIMENSIONS ARE IN MILLIMETERS UNLESS OTHERWISE SHOWN

SAN FRANCISCO OAKLAND BAY BRIDGE
EAST SPAN SEISMIC SAFETY PROJECT
SELF-ANCHORED SUSPENSION BRIDGE
(SUPERSTRUCTURE & TOWER)

CABLE TIE-DOWN DETAILS NO. 2

R. Vallizadeh/V. Toan/Y.L./W.L./F.C.
DESIGN OVERSIGHT
Roya Vallizadeh / Vong Toan / Y. Liu
SIGN OFF DATE 07/21/06

	BY	CHECKED
DESIGN	J. Sun	J. Straski
DETAILS	S. Shi	J. Straski
QUANTITIES	J. Duxbury	S. Shi

PREPARED FOR THE STATE OF CALIFORNIA DEPARTMENT OF TRANSPORTATION

R. Manzanarez
PROJECT ENGINEER

BRIDGE NO. 34-0006L/R
KILOMETER POST 13.2/13.9

Rev. Date: 5-18-98

ORIGINAL SCALE IN MILLIMETERS FOR REDUCED PLANS 0 10 20 30 40 50 60 70 80 90 100

CU 04
EA 0120F1

DISREGARD PRINTS BEARING EARLIER REVISION DATES

REVISION DATES (PRELIMINARY STAGE ONLY) 05/18/99 08/20/99 05/31/01 04/08/02 07/01/02 12/19/02

SHEET 104R1 OF

FILE => p:\bb\04-0120f1\sas readv august 2005\cco#22\deptd02.dgn

DIST.	COUNTY	ROUTE	KILOMETER POST TOTAL PROJECT	SHEET NO.	TOTAL SHEETS
04	SF	80	13.2/13.9	629R1	1204

Caltrans Metric

George Baker
REGISTERED ENGINEER - CIVIL

12-6-04
PLANS APPROVAL DATE

REGISTERED PROFESSIONAL ENGINEER George S. Baker No. C57112 Exp. 12/31/07 CIVIL STATE OF CALIFORNIA

The State of California or its officers or agents shall not be responsible for the accuracy or completeness of electronic copies of this plan sheet.

T.Y. LIN / MOFFATT & NICHOL
825 BATTERY STREET
SAN FRANCISCO, CA 94111

Caltrans now has a web site! To get to the web site, go to: http://www.dot.ca.gov

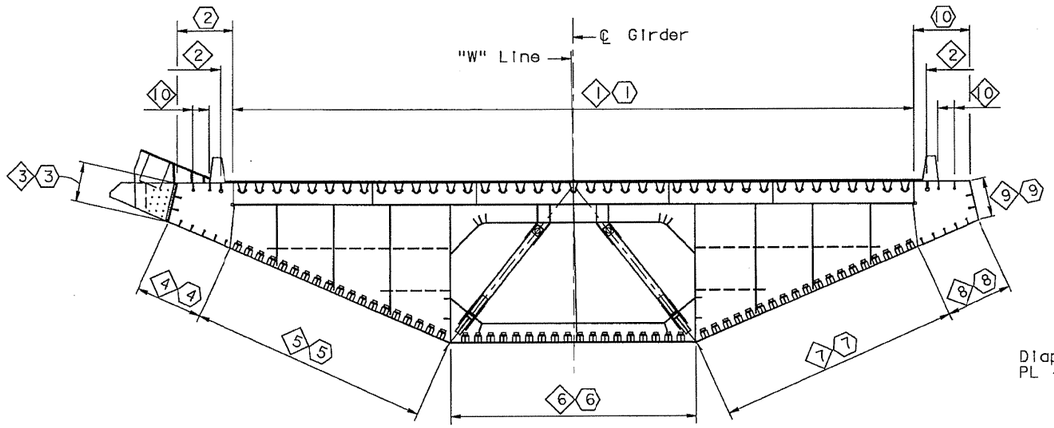

("W" LINE SECTION TYPE 1A SHOWN)

SECTION AT FLOORBEAM

1:100

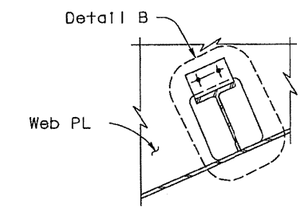

WT TYPE AT CROSSBEAM

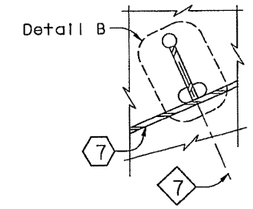

PLATE TYPE AT CROSSBEAM

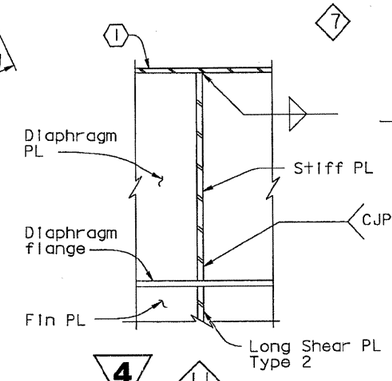

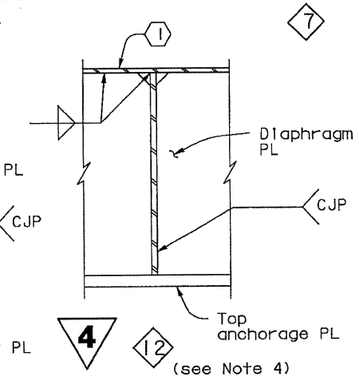

MARK	DATE	DESCRIPTIONS	BY	CH'D
1	07/21/06	ADD STIFFENER TYPES 13 THRU 18	GB	NV

REVISIONS

CONTRACT CHANGE ORDER NO. 22
SHEET 7 OF 8

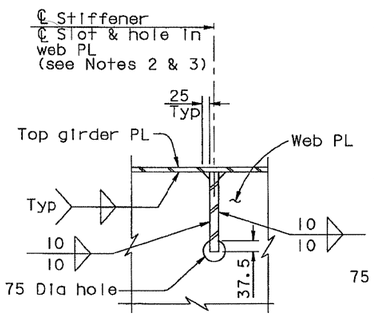

2

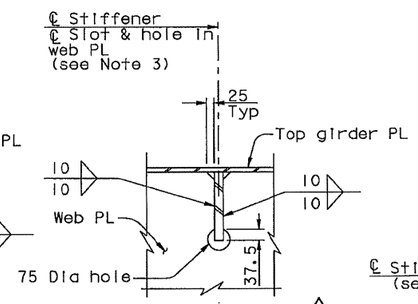

10, 13 thru 18 △1

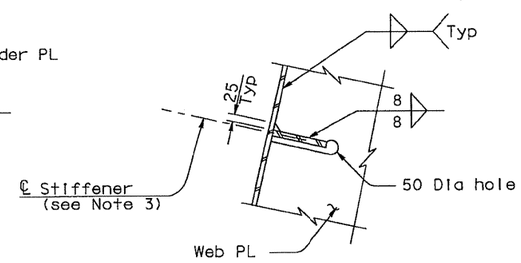

3 (see Note 5)

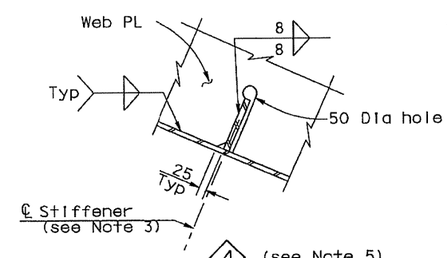

4 (see Note 5)

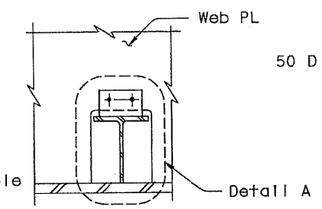

TYPICAL UNO

5 6 & 7 Except at crossbeam

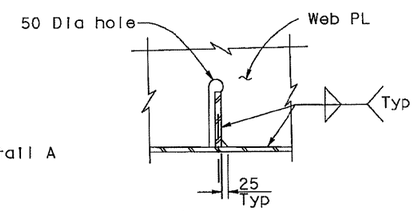

PLATE TYPE

5 6 & 7 Except at crossbeam

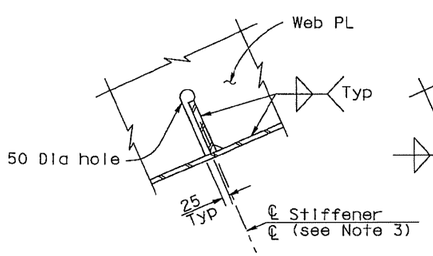

TYPICAL UNO

8

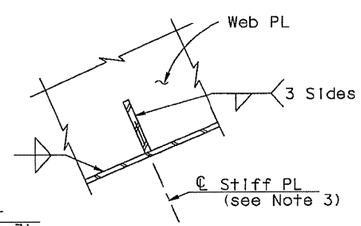

AT CROSSBEAM

8

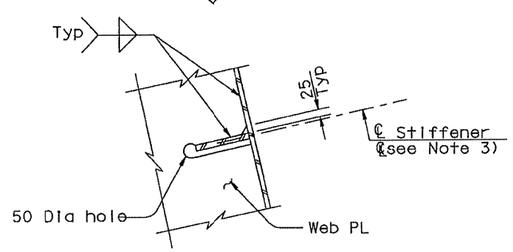

TYPICAL UNO

9

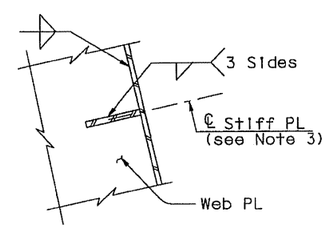

AT CROSSBEAM

9

STIFFENER DETAILS AT FLOORBEAM (see Note 3)

1:10

NOTES:

1. For Details A and B, see "Typical Girder Details No. 6" sheet.
2. For details at PP117 to PP121, see "Girder at East Transition Details No. 1" and "Girder At Pier E2 No. 9" sheets.
3. All typical girder stiffeners are continuous through floorbeam web except for 8 and 9 at crossbeam, and 1 typically, and unless otherwise specified in the plans.
4. △1 For locations of stiffener types 1 thru 18, see "Girder at East Transition" sheets.
5. Typical details for 3 and 4 shown. For details at suspender location, see "Typical Girder Details No. 6" sheet.

4 REVISED PER ADDENDUM NO. 4 DATED DECEMBER 9, 2005

ALL DIMENSIONS ARE IN MILLIMETERS UNLESS OTHERWISE SHOWN

SAN FRANCISCO OAKLAND BAY BRIDGE
EAST SPAN SEISMIC SAFETY PROJECT
SELF-ANCHORED SUSPENSION BRIDGE
(SUPERSTRUCTURE & TOWER)

TYPICAL GIRDER DETAILS NO. 5

R. Vallizadeh/V. Toan/Y.L./W.L./F.C.
DESIGN OVERSIGHT
Roya Vallizadeh / Vong Toan / Y. Liu
SIGN OFF DATE 07/21/06

	BY	CHECKED
DESIGN	G. Baker	P. Ritchie
DETAILS	S. Camo	T. McMeans
QUANTITIES	G. Baker	M. Roberts

PREPARED FOR THE STATE OF CALIFORNIA DEPARTMENT OF TRANSPORTATION

R. Manzanarez
PROJECT ENGINEER

BRIDGE NO. 34-0006L/R
KILOMETER POST 13.2/13.9

CU 04
EA 0120F1

DISREGARD PRINTS BEARING EARLIER REVISION DATES

REVISION DATES (PRELIMINARY STAGE ONLY): 01/15/99 05/18/99 08/26/99 05/07/01 01/08/02 07/01/02 12/19/02 11/13/05

SHEET 212R1 OF

Rev. Date: 5-18-98

ORIGINAL SCALE IN MILLIMETERS FOR REDUCED PLANS 0 10 20 30 40 50 60 70 80 90 100

FILE => p:\bb\04-012001\sas ready august 2005\cco#22\agdkd03a.dgn

USERNAME => vignatovsk DATE PLOTTED => 11 JUL 2006 TIME PLOTTED => 13:14:54

100% PS&E

DIST.	COUNTY	ROUTE	KILOMETER POST TOTAL PROJECT	SHEET NO.	TOTAL SHEETS
04	SF	80	13.2/13.9	651R1	1204

Caltrans Metric

George Baker
REGISTERED ENGINEER - CIVIL

1-27-03
PLANS APPROVAL DATE

REGISTERED PROFESSIONAL ENGINEER George S. Baker No. C57112 Exp. 12/31/07 CIVIL STATE OF CALIFORNIA

The State of California or its officers or agents shall not be responsible for the accuracy or completeness of electronic copies of this plan sheet.

T.Y. LIN / MOFFATT & NICHOL
825 BATTERY STREET
SAN FRANCISCO, CA 94111

To get to the web site, go to http://www.dot.ca.gov

MARK	DATE	DESCRIPTIONS	BY	CH'D
1	07/21/06	DELETE WELD CALLOUT	GB	NV

REVISIONS

CONTRACT CHANGE ORDER NO. 22
SHEET 8 OF 8

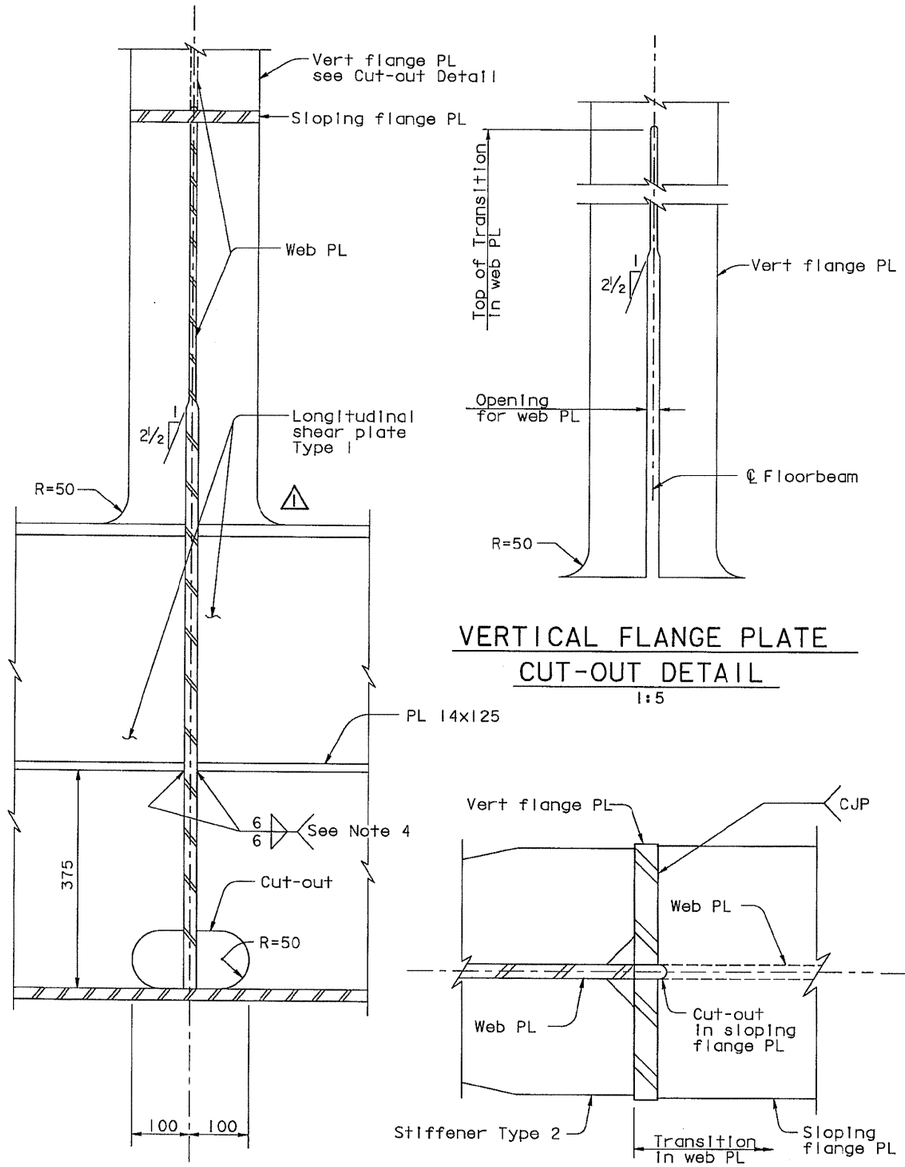

VERTICAL FLANGE PLATE CUT-OUT DETAIL
1:5

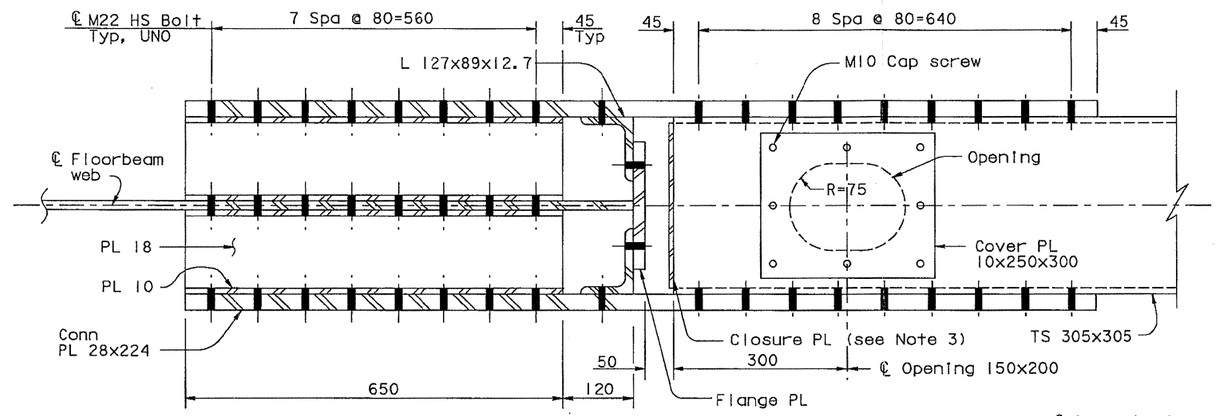

SECTION G-G
1:5

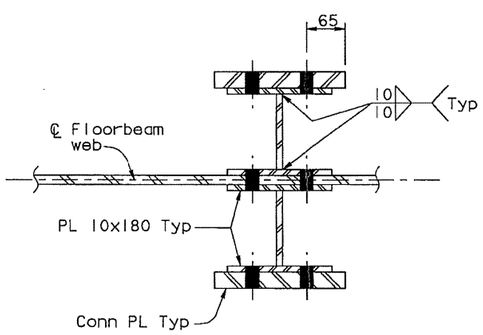

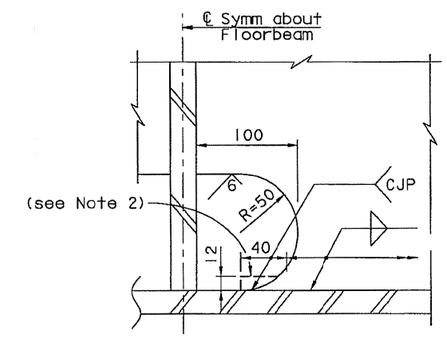

CUTOUT DETAIL
1:2.5

4 SECTION F-F
1:5

SECTION E-E
1:2.5

SECTION H-H
1:5

NOTES:

1. For location of Sections E-E, F-F, G-G and H-H, see Detail D on "Typical Floorbeam Details No.5" sheet.
2. Grind off end of CJP welds. Provide 12 mm trailer with transition to cut-out. See similar Detail A on "Typical Girder Details No.4" sheet. Grind opening to 6 Micron finish in accordance with ANSI B46.1.
3. For closure plate details, see "Typical Floorbeam Details No.7" sheet.
4. Weld shall be CJP in SPCM zone.

4 REVISED PER ADDENDUM NO. 4 DATED DECEMBER 9, 2005

4

ALL DIMENSIONS ARE IN MILLIMETERS UNLESS OTHERWISE SHOWN

100 % PS&E

SAN FRANCISCO OAKLAND BAY BRIDGE
EAST SPAN SEISMIC SAFETY PROJECT
SELF-ANCHORED SUSPENSION BRIDGE
(SUPERSTRUCTURE & TOWER)

TYPICAL FLOORBEAM DETAILS NO. 6

R. Valizadeh/V. Toan/Y.L./W.L./F.C.
DESIGN OVERSIGHT
Roger Valizadeh / Vong Toan / Y. Liu
SIGN OFF DATE 07/21/06

	BY	CHECKED
DESIGN	G. Baker	P. Ritchie
DETAILS	S. Camo	T. McMeans
QUANTITIES	C. Mauch	M. Roberts

PREPARED FOR THE STATE OF CALIFORNIA DEPARTMENT OF TRANSPORTATION

R. Manzanarez
PROJECT ENGINEER

BRIDGE NO. 34-0006L/R
KILOMETER POST 13.2/13.9

Rev. Date: 5-18-98

ORIGINAL SCALE IN MILLIMETERS FOR REDUCED PLANS 0 10 20 30 40 50 60 70 80 90 100

CU 04
EA 0120F1

DISREGARD PRINTS BEARING EARLIER REVISION DATES

REVISION DATES (PRELIMINARY STAGE ONLY) 03/29/00 05/31/01 04/08/02 07/01/02 12/19/02 11/13/05

SHEET 234R1 OF

FILE => p:\bb\04-012001\sas readv august 2005\cco#22\agftb04a.dgn

USERNAME => vignatovs DATE PLOTTED => 11 JUL 2006 TIME PLOTTED => 15:27:55