| DIST. | COUNTY | ROUTE | KILOMETER POST TOTAL PROJECT | SHEET NO. | TOTAL SHEETS |
|---|---|---|---|---|---|
| 04 | SF | 80 | 13.2/13.9 | 521R1 | 1204 |

Caltrans Metric

REGISTERED ENGINEER - CIVIL

12-6-04
PLANS APPROVAL DATE

REGISTERED PROFESSIONAL ENGINEER John Sun No. C 54648 Exp. 12/31/05 CIVIL STATE OF CALIFORNIA

*The State of California or its officers or agents shall not be responsible for the accuracy or completeness of electronic copies of this plan sheet.*

T.Y. LIN / MOFFATT & NICHOL
825 BATTERY STREET
SAN FRANCISCO, CA 94111

*Caltrans now has a web site! To get to the web site, go to: http://www.dot.ca.gov*

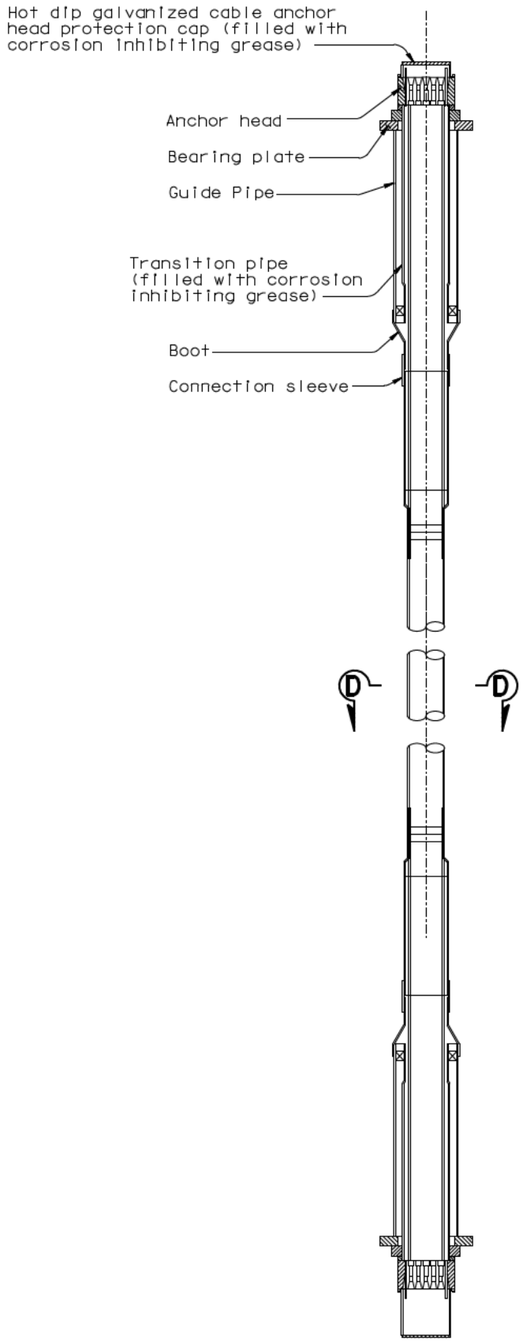


**DEAD END**

**JACKING END**

(For illustration only)

## TIE-DOWN CABLE DETAILS

1:20

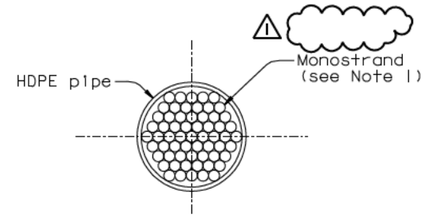


## SECTION D-D

NTS

REGISTERED PROFESSIONAL ENGINEER Marwan N. Nader No. C 054426 Exp. 12/31/07 CIVIL STATE OF CALIFORNIA

FOR REVISIONS ONLY

| MARK | DATE | DESCRIPTIONS | BY | CH'D | CCO# |
|---|---|---|---|---|---|
| 1 | 07/21/06 | REMOVE EPOXY COATING | MN | NV | 22 |

REVISIONS

CONTRACT CHANGE ORDER NO. _____
SHEET ___ OF ___

LEGEND:

HDPE - High density polyethylene.

NOTES:

1. Each individual monostrand shall be fully coated with corrosion inhibiting grease and then encapsulated by a high-density polyethylene (HDPE) or high-density polypropylene (HDPP) smooth sheath.

100 % PS&E

ALL DIMENSIONS ARE IN MILLIMETERS UNLESS OTHERWISE SHOWN

R. Valizadeh/V. Toan/Y.L./W.L./F.C.
DESIGN OVERSIGHT
SIGN OFF DATE 07/21/06

| | BY | CHECKED |
|---|---|---|
| DESIGN | J. Sun | J. Straski |
| DETAILS | S. Shi | J. Straski |
| QUANTITIES | J. Duxbury | S. Shi |

PREPARED FOR THE STATE OF CALIFORNIA DEPARTMENT OF TRANSPORTATION

R. Manzanarez
PROJECT ENGINEER

BRIDGE NO. 34-0006L/R
KILOMETER POST 13.2/13.9

SAN FRANCISCO OAKLAND BAY BRIDGE
EAST SPAN SEISMIC SAFETY PROJECT
SELF-ANCHORED SUSPENSION BRIDGE
(SUPERSTRUCTURE & TOWER)

# CABLE TIE-DOWN DETAILS NO. 2

Rev. Date: 5-18-98

ORIGINAL SCALE IN MILLIMETERS FOR REDUCED PLANS 0 10 20 30 40 50 60 70 80 90 100

CU 04
EA 0120F1

DISREGARD PRINTS BEARING EARLIER REVISION DATES

REVISION DATES (PRELIMINARY STAGE ONLY) 05/18/99 08/30/99 05/31/01 04/08/02 07/01/02 12/19/02

SHEET 104R1 OF

FILE -> I:\bb\04-012001\sas\contract plans and cco\cco\cco#22\deptd02.dgn

USERNAME => alishansk DATE PLOTTED => 04 JUN 2007 TIME PLOTTED => 09:06:39

| DIST. | COUNTY | ROUTE | KILOMETER POST TOTAL PROJECT | SHEET NO. | TOTAL SHEETS |
|---|---|---|---|---|---|
| 04 | SF | 80 | 13.2/13.9 | 629R1 | 1204 |

George Baker
REGISTERED ENGINEER - CIVIL
12-6-04
PLANS APPROVAL DATE

REGISTERED PROFESSIONAL ENGINEER George S. Baker No. C57112 Exp. 12/31/07 CIVIL STATE OF CALIFORNIA

*The State of California or its officers or agents shall not be responsible for the accuracy or completeness of electronic copies of this plan sheet.*

T.Y. LIN / MOFFATT & NICHOL
825 BATTERY STREET
SAN FRANCISCO, CA 94111

*Caltrans now has a web site! To get to the web site, go to: http://www.dot.ca.gov*

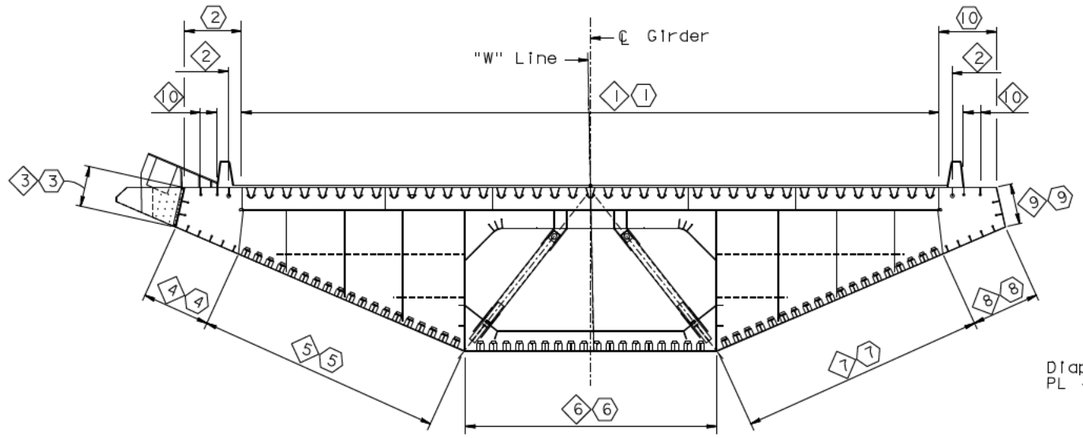


("W" LINE SECTION TYPE 1A SHOWN)

## SECTION AT FLOORBEAM

1:100

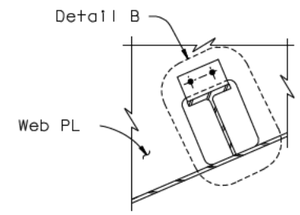


WT TYPE AT CROSSBEAM

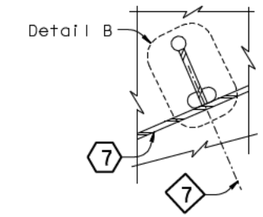


PLATE TYPE AT CROSSBEAM

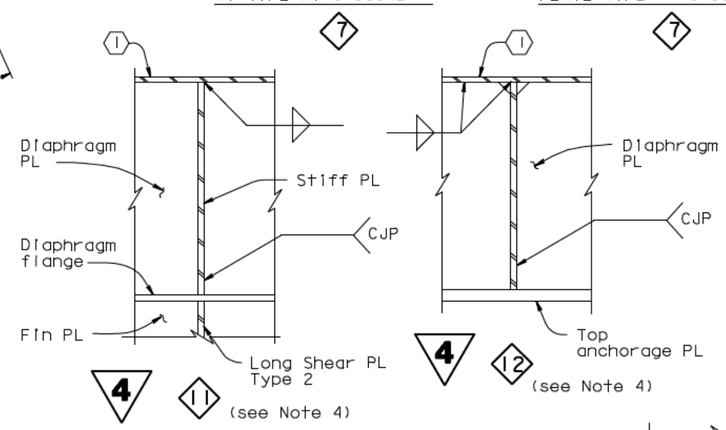


| MARK | DATE | DESCRIPTIONS | BY | CH'D | CCO# |
|---|---|---|---|---|---|
| 1 | 07/21/06 | ADD STIFFENER TYPES 13 THRU 18 | GB | NV | 22 |

REVISIONS

**CONTRACT CHANGE ORDER NO. ____**
**SHEET ___ OF ___**

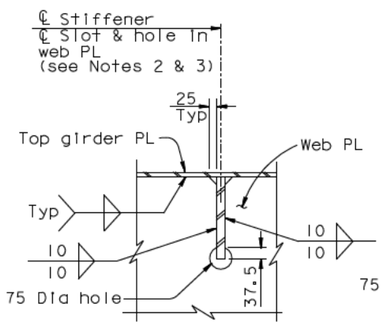


2

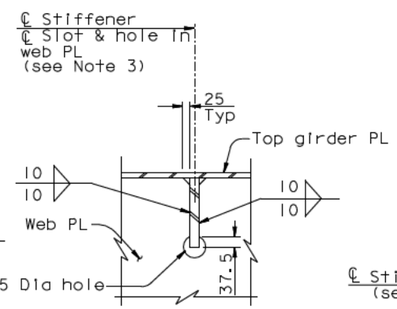


10 13 thru 18 1

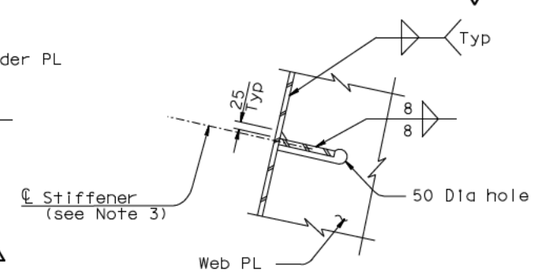


3 (see Note 5)

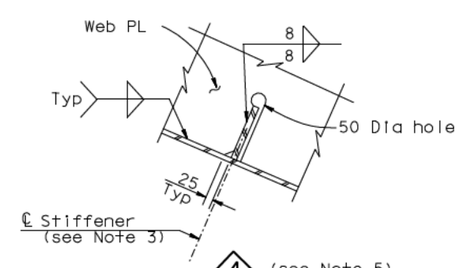


4 (see Note 5)

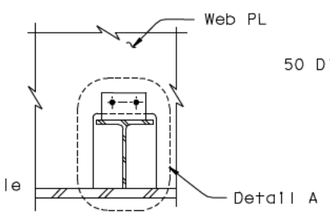


TYPICAL UNO

5 6 & 7 Except at crossbeam

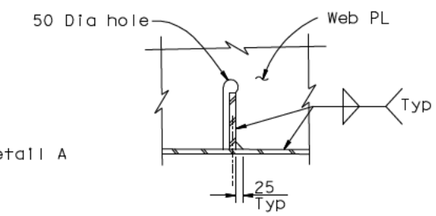


PLATE TYPE

5 6 & 7 Except at crossbeam

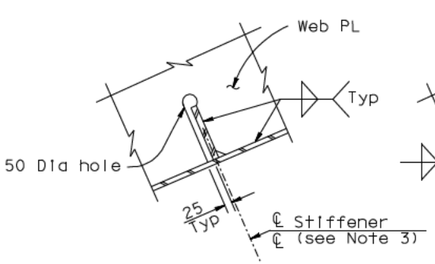


TYPICAL UNO

8

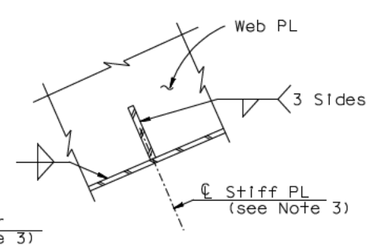


AT CROSSBEAM

8

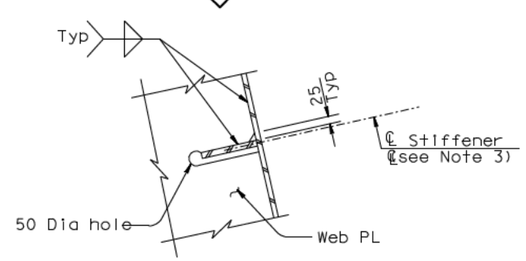


TYPICAL UNO

9

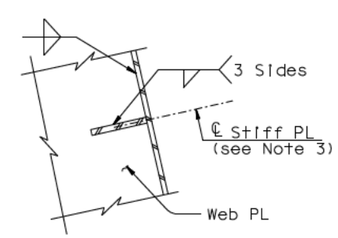


AT CROSSBEAM

9

## STIFFENER DETAILS AT FLOORBEAM (see Note 3)

1:10

NOTES:

1. For Details A and B, see "Typical Girder Details No. 6" sheet.
2. For details at PP117 to PP121, see "Girder at East Transition Details No. 1" and "Girder At Pier E2 No. 9" sheets.
3. All typical girder stiffeners are continuous through floorbeam web except for 8 and 9 at crossbeam, and 1 typically, and unless otherwise specified in the plans.
4. 1 For locations of stiffener types 1 thru 18, see "Girder at East Transition" sheets.
5. Typical details for 3 and 4 shown. For details at suspender location, see "Typical Girder Details No. 6" sheet.

**4 REVISED PER ADDENDUM NO. 4 DATED DECEMBER 9, 2005**

ALL DIMENSIONS ARE IN MILLIMETERS UNLESS OTHERWISE SHOWN

R. Vallzadeh/V. Toan/Y.L./W.L./F.C.
DESIGN OVERSIGHT
Roya Vallzadeh / Vong P. Toan / Y. Liu
SIGN OFF DATE 07/21/06

| | BY | CHECKED |
|---|---|---|
| DESIGN | G. Baker | P. Ritchie |
| DETAILS | S. Camo | T. McMeans |
| QUANTITIES | G. Baker | M. Roberts |

**PREPARED FOR THE STATE OF CALIFORNIA DEPARTMENT OF TRANSPORTATION**

R. Manzanarez
PROJECT ENGINEER

BRIDGE NO. 34-0006L/R
KILOMETER POST 13.2/13.9

**SAN FRANCISCO OAKLAND BAY BRIDGE**
**EAST SPAN SEISMIC SAFETY PROJECT**
**SELF-ANCHORED SUSPENSION BRIDGE (SUPERSTRUCTURE & TOWER)**

# TYPICAL GIRDER DETAILS NO. 5

Rev. Date: 5-18-98

ORIGINAL SCALE IN MILLIMETERS FOR REDUCED PLANS 0 10 20 30 40 50 60 70 80 90 100

CU 04
EA 0120F1

DISREGARD PRINTS BEARING EARLIER REVISION DATES

REVISION DATES (PRELIMINARY STAGE ONLY): 01/15/99 05/18/99 08/02/99 05/31/01 04/08/02 07/01/02 12/13/02 11/13/05

SHEET 212R1 OF

FILE -> I:\bb\04-012001\sas\contract plans and cco\cco\cco22\agdkd03a.dgn

100% PS&E

USERNAME => olishansk DATE PLOTTED => 04 JUN 2007 TIME PLOTTED => 09:05:22

| DIST. | COUNTY | ROUTE | KILOMETER POST TOTAL PROJECT | SHEET NO. | TOTAL SHEETS |
|---|---|---|---|---|---|
| 04 | SF | 80 | 13.2/13.9 | 651R1 | 1204 |

Caltrans Metric

George Baker
REGISTERED ENGINEER - CIVIL

1-27-03
PLANS APPROVAL DATE

The State of California or its officers or agents shall not be responsible for the accuracy or completeness of electronic copies of this plan sheet.

REGISTERED PROFESSIONAL ENGINEER George S. Baker No. C57112 Exp. 12/31/07 CIVIL STATE OF CALIFORNIA

T.Y. LIN / MOFFATT & NICHOL
825 BATTERY STREET
SAN FRANCISCO, CA 94111

To get to the web site, go to http://www.dot.ca.gov

| MARK | DATE | DESCRIPTIONS | BY | CH'D | CCO# |
|---|---|---|---|---|---|
| 1 | 07/21/06 | DELETE WELD CALLOUT | GB | NV | 22 |

REVISIONS

CONTRACT CHANGE ORDER NO. ____
SHEET ____ OF ____

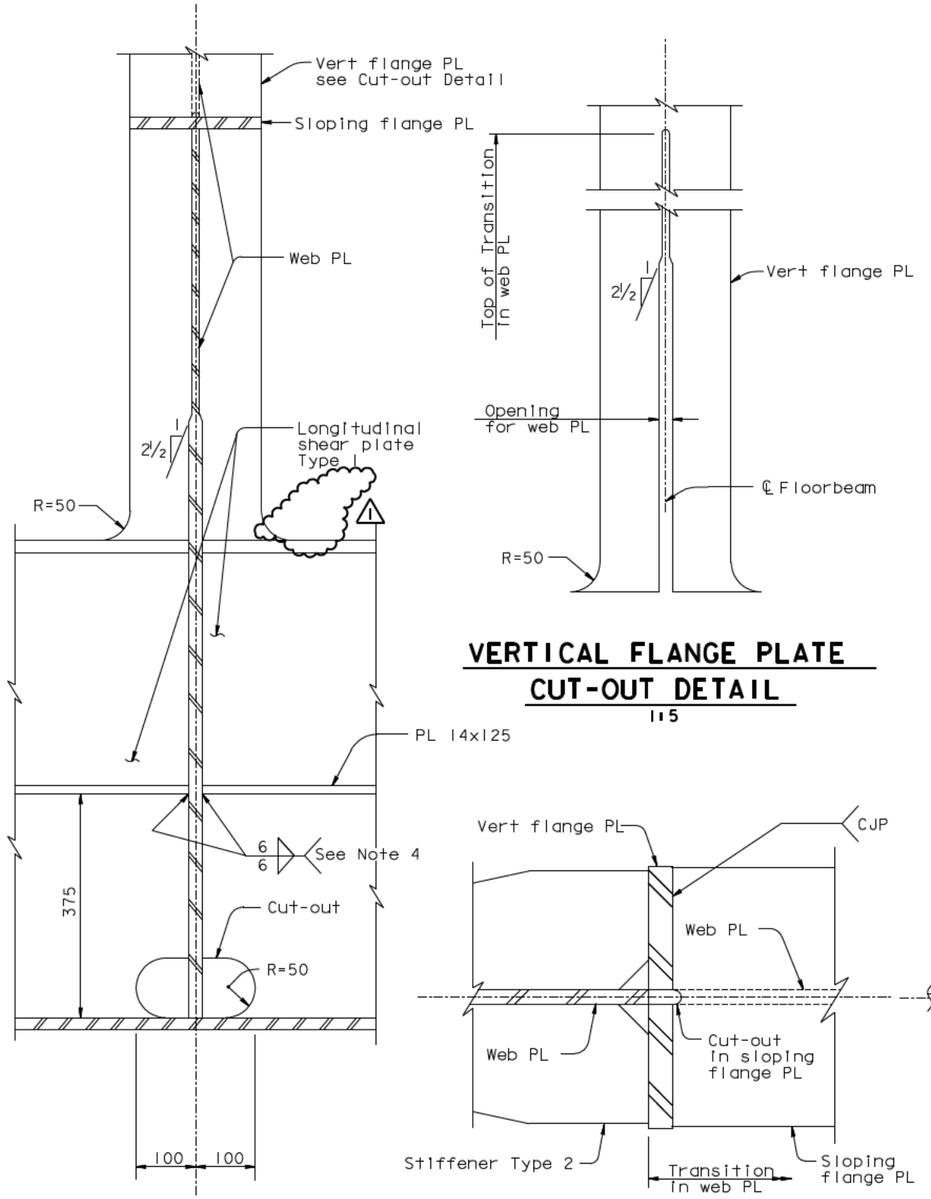


VERTICAL FLANGE PLATE CUT-OUT DETAIL
1:5

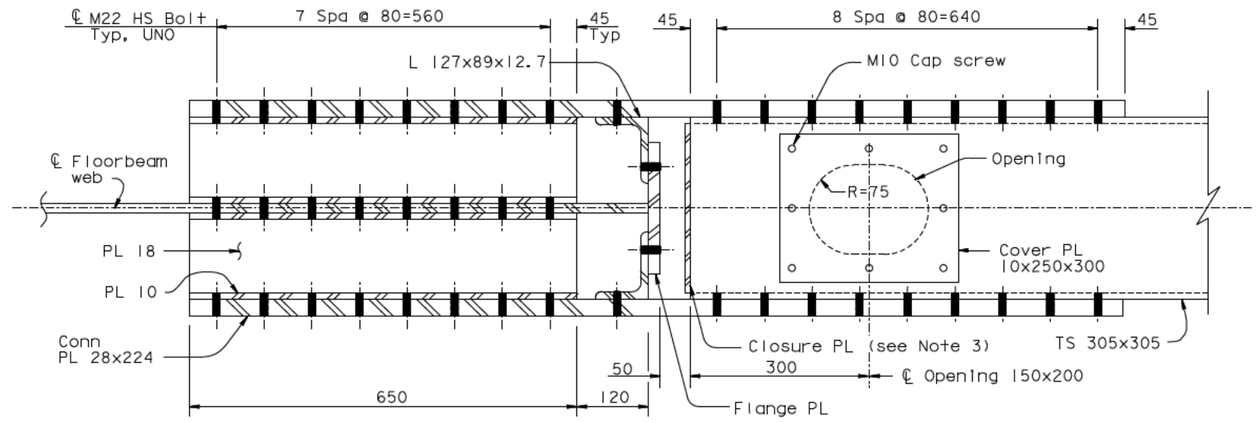


SECTION G-G
1:5




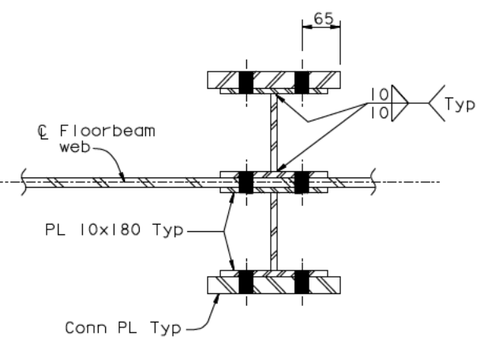


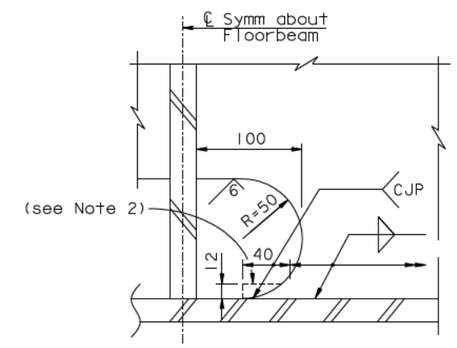


CUTOUT DETAIL
1:2.5

4 SECTION F-F
1:5

SECTION E-E
1:2.5

SECTION H-H
1:5

NOTES:

1. For location of Sections E-E, F-F, G-G and H-H, see Detail D on "Typical Floorbeam Details No.5" sheet.
2. Grind off end of CJP welds. Provide 12 mm trailer with transition to cut-out. See similar Detail A on "Typical Girder Details No.4" sheet. Grind opening to 6 Micron finish in accordance with ANSI B46.1.
3. For closure plate details, see "Typical Floorbeam Details No.7" sheet.
4. Weld shall be CJP in SPCM zone.

4 REVISED PER ADDENDUM NO. 4 DATED DECEMBER 9, 2005

4

ALL DIMENSIONS ARE IN MILLIMETERS UNLESS OTHERWISE SHOWN

SAN FRANCISCO OAKLAND BAY BRIDGE
EAST SPAN SEISMIC SAFETY PROJECT
SELF-ANCHORED SUSPENSION BRIDGE
(SUPERSTRUCTURE & TOWER)

TYPICAL FLOORBEAM DETAILS NO.6

R. Valizadeh/V. Toan/Y.L./W.L./F.C.
DESIGN OVERSIGHT
Roger Valizadeh / Vong Toan / Y. Liu
SIGN OFF DATE 07/21/06

| | BY | CHECKED |
|---|---|---|
| DESIGN | G. Baker | P. Ritchie |
| DETAILS | S. Camo | T. McMeans |
| QUANTITIES | C. Mauch | M. Roberts |

PREPARED FOR THE STATE OF CALIFORNIA DEPARTMENT OF TRANSPORTATION

R. Manzanarez
PROJECT ENGINEER

BRIDGE NO. 34-0006L/R
KILOMETER POST 13.2/13.9

Rev. Date: 5-18-98

ORIGINAL SCALE IN MILLIMETERS FOR REDUCED PLANS 0 10 20 30 40 50 60 70 80 90 100

CU 04
EA 0120F1

DISREGARD PRINTS BEARING EARLIER REVISION DATES

REVISION DATES (PRELIMINARY STAGE ONLY) 03/29/00 05/31/01 04/08/02 07/01/02 12/19/02 11/13/05

SHEET 234R1 OF

FILE -> I:\bb\04-012001\sas\contract plans and cco\cco\cco#22\agftb04a.dgn

100 % PS&E

USERNAME => alishansky DATE PLOTTED => 04 JUN 2007 TIME PLOTTED => 09:02:10