INDEX TO PLANS

SHEET No.	TITLE
001	PROJECT LIMITS
002	GENERAL PLAN
003R1	INDEX TO PLANS NO. 1
004	INDEX TO PLANS NO. 2
005	INDEX TO PLANS NO. 3
006	GENERAL NOTES NO. 1
007	GENERAL NOTES NO. 2
008	GENERAL NOTES NO. 3
009	GENERAL NOTES NO. 4
010	PILE DATA
011	CROSS SECTION
012	STRUCTURE PLAN NO. 1
013	STRUCTURE PLAN NO. 2
014	STRUCTURE PLAN NO. 3
015	DECK CONTOURS NO. 1
016	DECK CONTOURS NO. 2
017	DECK CONTOURS NO. 3
018	DECK CONTOURS NO. 4
019	DECK CONTOURS NO. 5
020	DECK CONTOURS NO. 6
021	DECK CONTOURS NO. 7
022	DECK CONTOURS NO. 8
023	DECK CONTOURS NO. 9
024	DECK CONTOURS NO. 10
025	FOUNDATION PLAN NO. 1
026	FOUNDATION PLAN NO. 2
027	FOUNDATION PLAN NO. 3
028	FOUNDATION PLAN NO. 4
029	FOUNDATION PLAN NO. 5
030	PIER W2 DETAILS NO. 1
031	PIER W2 DETAILS NO. 2
032	PIER W2 DETAILS NO. 3
033	PIER W2 DETAILS NO. 4
034	PIER W2 DETAILS NO. 5
035	PIER W2 DETAILS NO. 6
036	PIER W2 DETAILS NO. 7
037	W2 CAP BEAM DIMENSION DETAILS NO. 1
038	W2 CAP BEAM DIMENSION DETAILS NO. 2
039	W2 CAP BEAM DIMENSION DETAILS NO. 3
040	W2 CAP BEAM DIMENSION DETAILS NO. 4
041	W2 CAP BEAM DIMENSION DETAILS NO. 5
042	W2 CAP BEAM DIMENSION DETAILS NO. 6
043	W2 CAP BEAM DIMENSION DETAILS NO. 7
044	W2 CAP BEAM DIMENSION DETAILS NO. 8
045	W2 CAP BEAM POST-TENSIONING DETAILS NO. 1
046	W2 CAP BEAM POST-TENSIONING DETAILS NO. 2
047	W2 CAP BEAM POST-TENSIONING DETAILS NO. 3
048	W2 CAP BEAM POST-TENSIONING DETAILS NO. 4
049	W2 CAP BEAM POST-TENSIONING DETAILS NO. 5
050	W2 CAP BEAM POST-TENSIONING DETAILS NO. 6
051	W2 CAP BEAM POST-TENSIONING DETAILS NO. 7
052	W2 CAP BEAM POST-TENSIONING DETAILS NO. 8
053	W2 CAP BEAM POST-TENSIONING DETAILS NO. 9
054	W2 CAP BEAM POST-TENSIONING DETAILS NO. 10
055	W2 CAP BEAM POST-TENSIONING DETAILS NO. 11
056	W2 CAP BEAM POST-TENSIONING DETAILS NO. 12
057	W2 CAP BEAM REINFORCEMENT DETAILS NO. 1
058	W2 CAP BEAM REINFORCEMENT DETAILS NO. 2
059	W2 CAP BEAM REINFORCEMENT DETAILS NO. 3
060	W2 CAP BEAM REINFORCEMENT DETAILS NO. 4
061	W2 CAP BEAM REINFORCEMENT DETAILS NO. 5
062	W2 CAP BEAM REINFORCEMENT DETAILS NO. 6

MARK	DATE	DESCRIPTIONS	BY	CH'D	CCO#
1	06/23/06	REVISED & NEW PLAN SHEETS ADDED	TH	NV	21

REVISIONS

CONTRACT CHANGE ORDER NO. ___
SHEET ___ OF ___

SHEET No.	TITLE
063	W2 CAP BEAM REINFORCEMENT DETAILS NO. 7
064	W2 CAP BEAM REINFORCEMENT DETAILS NO. 8
065	W2 CAP BEAM REINFORCEMENT DETAILS NO. 9
066	W2 CAP BEAM REINFORCEMENT DETAILS NO. 10
067	W2 CAP BEAM REINFORCEMENT DETAILS NO. 11
068	W2 CAP BEAM REINFORCEMENT DETAILS NO. 12
069	W2 CAP BEAM REINFORCEMENT DETAILS NO. 13
070	W2 CAP BEAM REINFORCEMENT DETAILS NO. 14
071	W2 CAP BEAM REINFORCEMENT DETAILS NO. 15
072	W2 CAP BEAM REINFORCEMENT DETAILS NO. 16
073	W2 CAP BEAM REINFORCEMENT DETAILS NO. 17
074	W2 CAP BEAM REINFORCEMENT DETAILS NO. 18
075	W2 CAP BEAM REINFORCEMENT DETAILS NO. 19
076	W2 CAP BEAM REINFORCEMENT DETAILS NO. 20
077	W2 CAP BEAM REINFORCEMENT DETAILS NO. 21
078	W2 CAP BEAM REINFORCEMENT DETAILS NO. 22
079	W2 CAP BEAM REINFORCEMENT DETAILS NO. 23
080	W2 CAP BEAM REINFORCEMENT DETAILS NO. 24
081	W2 CAP BEAM BLOCKOUT DETAILS NO. 1
082	W2 CAP BEAM BLOCKOUT DETAILS NO. 2
083	W2 CAP BEAM BLOCKOUT DETAILS NO. 3
084	W2 CAP BEAM BLOCKOUT DETAILS NO. 4
085	W2 CAP BEAM BLOCKOUT DETAILS NO. 5
086	W2 CAP BEAM BLOCKOUT DETAILS NO. 6
087	W2 CAP BEAM BLOCKOUT DETAILS NO. 7
088	W2 CAP BEAM BLOCKOUT DETAILS NO. 8
089	W2 CAP BEAM BLOCKOUT DETAILS NO. 9
090	W2 CAP BEAM BLOCKOUT DETAILS NO. 10
091	W2 CAP BEAM BLOCKOUT DETAILS NO. 11
092	W2 CAP BEAM BLOCKOUT DETAILS NO. 12
093	PIER E2 DETAILS NO. 1
094	PIER E2 DETAILS NO. 2
095	PIER E2 DETAILS NO. 3
096	PIER E2 DETAILS NO. 4
097	PIER E2 DETAILS NO. 5
098	PIER E2 DETAILS NO. 6
099	PIER E2 DETAILS NO. 7
100	PIER E2 DETAILS NO. 8
101	PIER E2 DETAILS NO. 9
102	PIER E2 DETAILS NO. 10
103	CABLE TIE-DOWN DETAILS NO. 1
104	CABLE TIE-DOWN DETAILS NO. 2
105	CABLE TIE-DOWN DETAILS NO. 3
106	CABLE TIE-DOWN DETAILS NO. 4
107	TOWER LAYOUT NO. 1
108	TOWER LAYOUT NO. 2
109	TOWER LAYOUT NO. 3
110	TOWER LAYOUT NO. 4
111	TOWER LAYOUT NO. 5
112	TOWER SHAFT DETAILS NO. 1
113	TOWER SHAFT DETAILS NO. 2
114	TOWER SHAFT DETAILS NO. 3
115R1	TOWER SHAFT DETAILS NO. 4
116	TOWER SHAFT DETAILS NO. 5
117	TOWER SHAFT DETAILS NO. 6
118	TOWER SHAFT DETAILS NO. 7
119	TOWER SHAFT DETAILS NO. 8
120	TOWER SHAFT DETAILS NO. 9
121R1	TOWER SHAFT DETAILS NO. 10
122R1	TOWER SHAFT DETAILS NO. 11
123	TOWER SPLICE DETAILS NO. 1
124R1	TOWER SPLICE DETAILS NO. 2
124S1	TOWER SPLICE DETAILS NO. 2A
125R1	TOWER SPLICE DETAILS NO. 3
126R1	TOWER SPLICE DETAILS NO. 4
127R1	TOWER SPLICE DETAILS NO. 5
128R1	TOWER SPLICE DETAILS NO. 6

SHEET No.	TITLE
129R1	TOWER SPLICE DETAILS NO. 7
130R1	TOWER SPLICE DETAILS NO. 8
131R1	TOWER SPLICE DETAILS NO. 9
132R1	TOWER SPLICE DETAILS NO. 10
133R1	TOWER SPLICE DETAILS NO. 11
134R1	TOWER SPLICE DETAILS NO. 12
135R1	TOWER SPLICE DETAILS NO. 13
136R1	TOWER SPLICE DETAILS NO. 14
137R1	TOWER SPLICE DETAILS NO. 15
138R1	TOWER SPLICE DETAILS NO. 16
139R1	TOWER SPLICE DETAILS NO. 17
140R1	TOWER SPLICE DETAILS NO. 18
141R1	TOWER SPLICE DETAILS NO. 19
142R1	TOWER SPLICE DETAILS NO. 20
143R1	TOWER SPLICE DETAILS NO. 21
144R1	TOWER SPLICE DETAILS NO. 22
144S1	TOWER SPLICE DETAILS NO. 23
145	TOWER STRUT DETAILS NO. 1
146	TOWER STRUT DETAILS NO. 2
147	TOWER STRUT DETAILS NO. 3
148	TOWER STRUT DETAILS NO. 4
149	TOWER STRUT DETAILS NO. 5
150	TOWER STRUT DETAILS NO. 6
151	TOWER STRUT DETAILS NO. 7
152	TOWER STRUT DETAILS NO. 8
153R1	TOWER STRUT DETAILS NO. 9
154	TOWER STRUT DETAILS NO. 10
155	TOWER STRUT FACADE DETAILS NO. 1
156	TOWER STRUT FACADE DETAILS NO. 2
157	TOWER STRUT FACADE DETAILS NO. 3
158	TOWER STRUT FACADE DETAILS NO. 4
159	TOWER DIAPHRAGM DETAILS NO. 1
160	TOWER DIAPHRAGM DETAILS NO. 2
161R1	TOWER DIAPHRAGM DETAILS NO. 3
162R1	TOWER DIAPHRAGM DETAILS NO. 4
163R1	TOWER DIAPHRAGM DETAILS NO. 5
164R1	TOWER DIAPHRAGM DETAILS NO. 6
165	TOWER DIAPHRAGM DETAILS NO. 7
166R1	TOWER DIAPHRAGM DETAILS NO. 8
167R1	TOWER DIAPHRAGM DETAILS NO. 9
168R1	TOWER DIAPHRAGM DETAILS NO. 10
169R1	TOWER DIAPHRAGM DETAILS NO. 11
170R1	TOWER DIAPHRAGM DETAILS NO. 12
171R1	TOWER DIAPHRAGM DETAILS NO. 13
172	TOWER DIAPHRAGM DETAILS NO. 14
173	TOWER DIAPHRAGM DETAILS NO. 15
174	TOWER DIAPHRAGM DETAILS NO. 16
175	TOWER DIAPHRAGM DETAILS NO. 17
176	TOWER ANCHORAGE DETAILS NO. 1
177	TOWER ANCHORAGE DETAILS NO. 2
178	TOWER ANCHORAGE DETAILS NO. 3
179	TOWER ANCHORAGE DETAILS NO. 4
180R1	TOWER ANCHORAGE DETAILS NO. 5
181R1	TOWER ANCHORAGE DETAILS NO. 6
182	TOWER ANCHORAGE DETAILS NO. 7
183	TOWER ANCHORAGE DETAILS NO. 8
184	TOWER SKIRT DETAILS NO. 1
185	TOWER SKIRT DETAILS NO. 2
186	TOWER SKIRT DETAILS NO. 3
187	TOWER SKIRT DETAILS NO. 4
188	TOWER SADDLE GRILLAGE DETAILS NO. 1
189	TOWER SADDLE GRILLAGE DETAILS NO. 2
190	TOWER SADDLE GRILLAGE DETAILS NO. 3
191R1	TOWER SADDLE GRILLAGE DETAILS NO. 4

SHEET No.	TITLE
192R1	TOWER SADDLE GRILLAGE DETAILS NO. 5
193	TOWER SADDLE GRILLAGE DETAILS NO. 6
194R1	TOWER SADDLE GRILLAGE DETAILS NO. 7
195R1	TOWER SADDLE GRILLAGE DETAILS NO. 8
196	TYPICAL SECTIONS
197	PARTIAL TYPICAL SECTION NO. 1
198	PARTIAL TYPICAL SECTION NO. 2
199	PARTIAL TYPICAL SECTION NO. 3
200	PARTIAL TYPICAL SECTION NO. 4
201	PARTIAL TYPICAL SECTION NO. 5
202	GIRDER FRAMING PLAN NO. 1
203	GIRDER FRAMING PLAN NO. 2
204	GIRDER FRAMING PLAN NO. 3
205	GIRDER FRAMING PLAN NO. 4
206	GIRDER FRAMING DETAILS NO. 1
207	GIRDER FRAMING DETAILS NO. 2
208	TYPICAL GIRDER DETAILS NO. 1
209	TYPICAL GIRDER DETAILS NO. 2
210	TYPICAL GIRDER DETAILS NO. 3
211	TYPICAL GIRDER DETAILS NO. 4
212	TYPICAL GIRDER DETAILS NO. 5
213	TYPICAL GIRDER DETAILS NO. 6
214	TYPICAL GIRDER DETAILS NO. 7
215	TYPICAL GIRDER DETAILS NO. 8
216	TYPICAL GIRDER DETAILS NO. 9
217	TYPICAL GIRDER DETAILS NO. 10
218	TYPICAL GIRDER DETAILS NO. 11
219	TYPICAL GIRDER DETAILS NO. 12
220	TYPICAL GIRDER DETAILS NO. 13
221	TYPICAL GIRDER DETAILS NO. 14
222	TYPICAL GIRDER DETAILS NO. 15
223	TYPICAL GIRDER DETAILS NO. 16
224	TYPICAL GIRDER DETAILS NO. 17
225	CAMBER DIAGRAM
226	CAMBER SCHEDULE
227	CAMBER SCHEDULE-A
228	CAMBER SCHEDULE-B
229	TYPICAL FLOORBEAM DETAILS NO. 1
230	TYPICAL FLOORBEAM DETAILS NO. 2
231	TYPICAL FLOORBEAM DETAILS NO. 3
232	TYPICAL FLOORBEAM DETAILS NO. 4
233	TYPICAL FLOORBEAM DETAILS NO. 5
234	TYPICAL FLOORBEAM DETAILS NO. 6
235	TYPICAL FLOORBEAM DETAILS NO. 7
236	TYPICAL FLOORBEAM DETAILS NO. 8
237	TYPICAL FLOORBEAM DETAILS NO. 9
238	TYPICAL CROSSBEAM DETAILS NO. 1
239R1	TYPICAL CROSSBEAM DETAILS NO. 2
240	TYPICAL CROSSBEAM DETAILS NO. 3
241	TYPICAL CROSSBEAM DETAILS NO. 4
242R1	TYPICAL CROSSBEAM DETAILS NO. 5
243	TYPICAL CROSSBEAM DETAILS NO. 6
244R1	TYPICAL CROSSBEAM DETAILS NO. 7
245	TYPICAL CROSSBEAM DETAILS NO. 8
246	TYPICAL CROSSBEAM DETAILS NO. 9
247	TYPICAL CROSSBEAM DETAILS NO. 10
248	GIRDER AT PIER W2 NO. 1
249	GIRDER AT PIER W2 NO. 2
250	GIRDER AT PIER W2 NO. 3
251	GIRDER AT PIER W2 NO. 4
252	GIRDER AT PIER W2 NO. 5
253	GIRDER AT PIER W2 NO. 6

SHEET No.	TITLE
254	GIRDER TRANSITION NEAR TOWER NO. 1
255	GIRDER TRANSITION NEAR TOWER NO. 2
256	GIRDER TRANSITION NEAR TOWER NO. 3
257	GIRDER AT PIER E2 NO. 1
258	GIRDER AT PIER E2 NO. 2
259	GIRDER AT PIER E2 NO. 3
260	GIRDER AT PIER E2 NO. 4
261	GIRDER AT PIER E2 NO. 5
262	GIRDER AT PIER E2 NO. 6
263	GIRDER AT PIER E2 NO. 7
264	GIRDER AT PIER E2 NO. 8
265	GIRDER AT PIER E2 NO. 9
266	GIRDER AT EAST TRANSITION NO. 1
267	GIRDER AT EAST TRANSITION NO. 2
268	GIRDER AT EAST TRANSITION NO. 3
269	GIRDER AT EAST TRANSITION NO. 4
270	GIRDER AT EAST TRANSITION NO. 5
271	GIRDER AT EAST TRANSITION NO. 6
272	GIRDER AT EAST TRANSITION NO. 7
273	GIRDER AT EAST TRANSITION NO. 8
274	GIRDER AT EAST TRANSITION NO. 9
275	GIRDER AT EAST TRANSITION NO. 10
276	GIRDER AT EAST TRANSITION NO. 11
277	GIRDER AT EAST TRANSITION NO. 12
278	GIRDER AT EAST TRANSITION NO. 13
279	GIRDER AT EAST TRANSITION NO. 14
280	GIRDER AT EAST TRANSITION NO. 15
281	GIRDER AT EAST TRANSITION NO. 16
282	GIRDER AT EAST TRANSITION NO. 17
283	GIRDER AT EAST TRANSITION NO. 18
284	GIRDER AT EAST TRANSITION DETAILS NO. 1
285	GIRDER AT EAST TRANSITION DETAILS NO. 2
286	GIRDER AT EAST TRANSITION DETAILS NO. 3
287	GIRDER AT EAST TRANSITION DETAILS NO. 4
288	FLOORBEAM AT EAST TRANSITION NO. 1
289	FLOORBEAM AT EAST TRANSITION NO. 2
290	FLOORBEAM AT EAST TRANSITION NO. 3
291	FLOORBEAM AT EAST TRANSITION NO. 4
292	FLOORBEAM AT EAST TRANSITION NO. 5
293	FLOORBEAM AT EAST TRANSITION NO. 6
294	FLOORBEAM AT EAST TRANSITION NO. 7
295	FLOORBEAM AT EAST TRANSITION NO. 8
296	FLOORBEAM AT EAST TRANSITION NO. 9
297	FLOORBEAM AT EAST TRANSITION NO. 10
298	FLOORBEAM AT EAST TRANSITION DETAILS NO. 1
299	FLOORBEAM AT EAST TRANSITION DETAILS NO. 2
300	CROSSBEAM AT PIER E2 NO. 1
301	CROSSBEAM AT PIER E2 NO. 2
302	CROSSBEAM AT PIER E2 NO. 3
303	CROSSBEAM AT PIER E2 NO. 4
304	CROSSBEAM AT PIER E2 NO. 5

To get to the web site, go to: http://www.dot.ca.gov

Caltrans Metric

DIST	COUNTY	ROUTE	KILOMETER POST TOTAL PROJECT	SHEET No	TOTAL SHEETS
04	SF	80	13.2/13.9	420R1	1204

REGISTERED ENGINEER - CIVIL

12-6-04
PLANS APPROVAL DATE

REGISTERED PROFESSIONAL ENGINEER — Tien Hung Ho — No. C 43990 — Exp. 6/30/07 — CIVIL — STATE OF CALIFORNIA

The State of California or its officers or agents shall not be responsible for the accuracy or completeness of electronic copies of this plan sheet.

T.Y. LIN / MOFFATT & NICHOL
825 BATTERY STREET
SAN FRANCISCO, CA 94111

100 % PS&E

USERNAME => vignatovs DATE PLOTTED => 23 APR 2007 TIME PLOTTED => 14:44:19

R. Valizadeh/V. Toan/Y.L./W.L./F.C.
DESIGN OVERSIGHT
SIGN OFF DATE 06/23/06

Rev. Date: 5-18-98

DESIGN	BY T. Ho	CHECKED S. Rodriguez
DETAILS	BY V. Ignatovsky	CHECKED S. Rodriguez
QUANTITIES	BY D. Harrison	CHECKED N. Vo

PREPARED FOR THE
STATE OF CALIFORNIA
DEPARTMENT OF TRANSPORTATION

R. Manzanarez
PROJECT ENGINEER

BRIDGE NO. 34-0006L/R
KILOMETER POST 13.2/13.9

SAN FRANCISCO OAKLAND BAY BRIDGE
EAST SPAN SEISMIC SAFETY PROJECT
SELF-ANCHORED SUSPENSION BRIDGE
(SUPERSTRUCTURE & TOWER)

INDEX TO PLANS NO. 1

ORIGINAL SCALE IN MILLIMETERS FOR REDUCED PLANS 0 10 20 30 40 50 60 70 80 90 100

CU 04
EA 0120F1

DISREGARD PRINTS BEARING EARLIER REVISION DATES

REVISION DATES (PRELIMINARY STAGE ONLY): 01/15/99, 05/15/99, 08/02/99, 05/31/01, 04/08/02, 07/01/02, 12/15/02, 09/06/04

SHEET 003R1 OF

FILE => L:\BB\04-01200I\SAS\Contract Plans and CCO\CCO\CCO#21\aaltp01.dgn

3 REVISED PER ADDENDUM NO. 3 DATED NOVEMBER 7, 2005

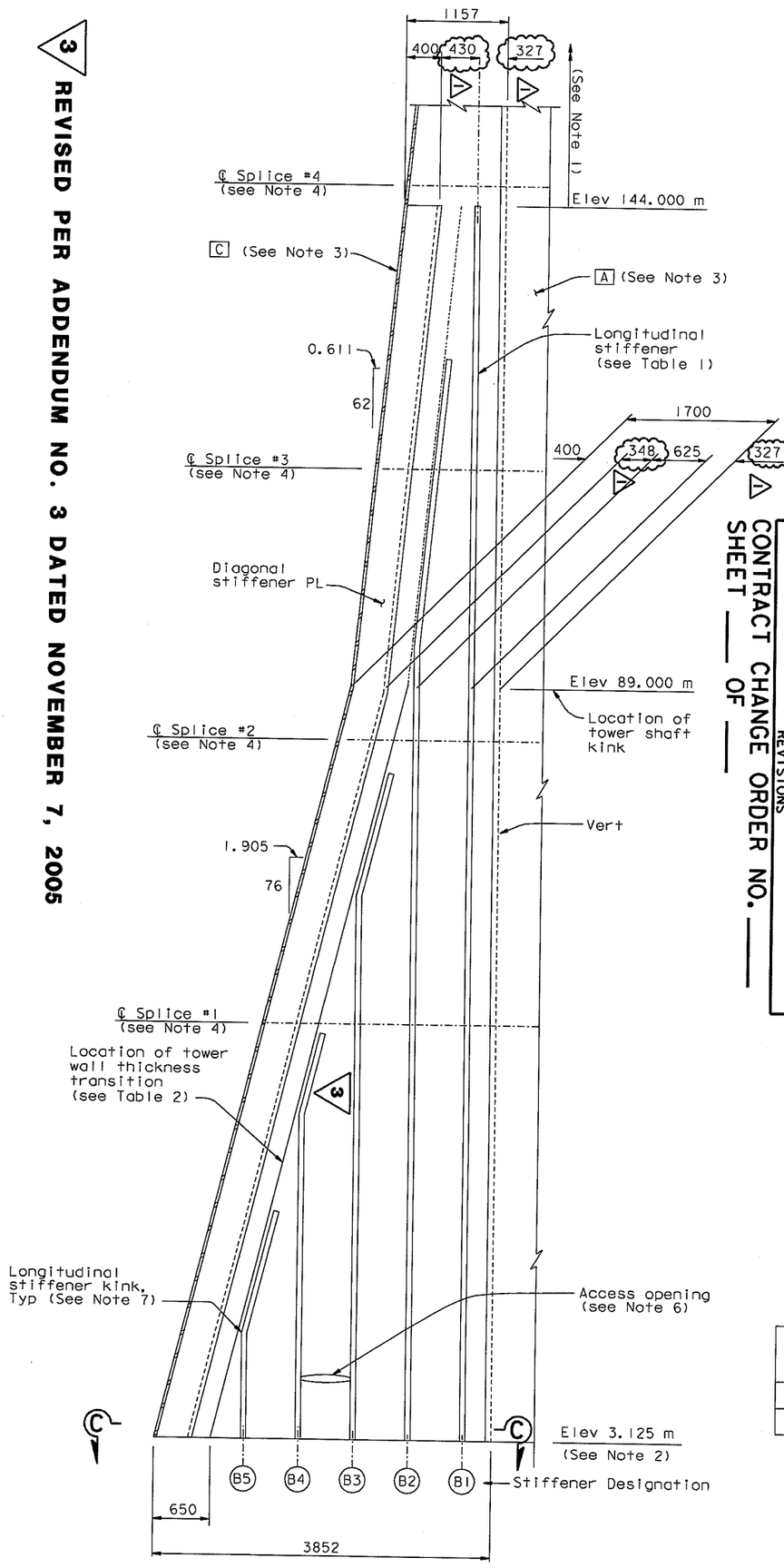

SECTION A-A

(Elevation of Skin Plate "B")
Horiz=1:30
Vert =1:300

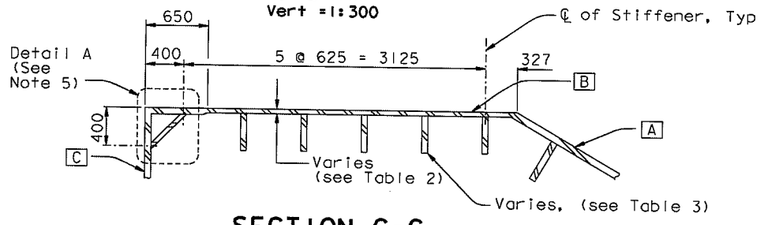

SECTION C-C

(Partial Plan of Skin Plate "B")
1:30
(See Note 9)

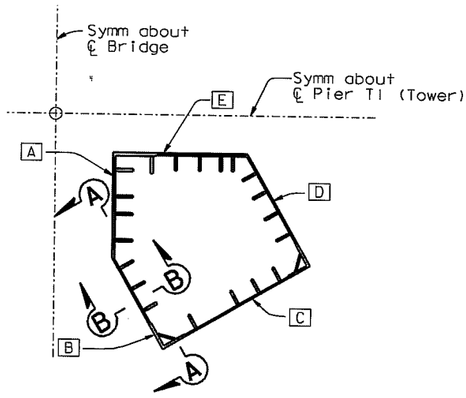

KEY PLAN

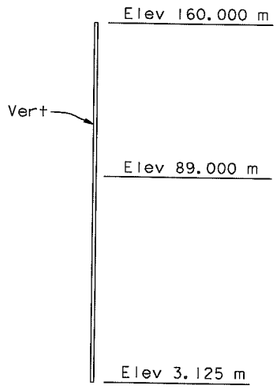

SECTION B-B

(Profile of Skin Plate "B")
(Longitudinal stiffener plates not shown for clarity)
Horiz=1:120
Vert =1:1200

Table 1

ELEVATIONS FOR LONGITUDINAL STIFFENER TRANSITIONS (m)		
STIFFENER DESIGNATION	BENT PL	END PL
B1	-	144.000
B2	93.815	126.795
B3	65.960	78.925
B4	41.025	48.280
B5	16.090	29.055

Table 2

ELEVATION (m)	SKIN PL THICKNESS (mm)	SKIN PL THICKNESS (mm) at CORNER B & C
3.125-30.000	45	65
30.000-144.000	60	90

Table 3

ELEVATION (m)	STIFFENER SIZE (mm x mm)
3.125-47.000	60x400
47.000-121.000	70x460
121.000-144.000	60x400

(See Note 8)

NOTES:

1. For tower saddle grillage and tower head details (not shown for clarity), see "Tower Saddle Grillage Details" and "Tower Head Details" sheets.
2. For tower anchorage details (not shown for clarity), see "Tower Anchorage Details" sheets.
3. Longitudinal stiffeners on tower skin PL A & C not shown for clarity.
4. For tower shaft splice details, see "Tower Splice Details" sheets.
5. For detail A, see "Tower Splice Details No.2" sheet.
6. For access openings details, see "Tower Access Details" sheets.
7. For longitudinal stiffener taper and kink details, see "Tower Splice Details No.2" sheet.
8. For longitudinal stiffener transition at tower splices, see sheets "Tower Splice Details No.7", "Tower Splice Details No.12", "Tower Splice Details No.17", and "Tower Splice Details No.19".
9. Anchorage bearing stiffener plates are not shown for clarity. For details see "Tower Anchorage Details" sheets.

100 % PS&E

MARK	DATE	DESCRIPTIONS	BY
3	06/23/06	DIMENSIONS BETWEEN LONG. STIFFENERS	MN

REVISIONS

CONTRACT CHANGE ORDER NO. ___
SHEET ___ OF ___

ALL DIMENSIONS ARE IN MILLIMETERS UNLESS OTHERWISE SHOWN

R. Volizoder/V. Toon/Y.L./W.L./F.C.
DESIGN OVERSIGHT
SIGN OFF DATE 06/23/06
Rev. Date: 5-18-98

DESIGN BY M. Nader CHECKED M. Gulyas
DETAILS BY L. Rus CHECKED M. Gulyas
QUANTITIES BY L. Rus CHECKED Y. Zhong

ORIGINAL SCALE IN MILLIMETERS FOR REDUCED PLANS 0 10 20 30 40 50 60 70 80 90 100

PREPARED FOR THE STATE OF CALIFORNIA DEPARTMENT OF TRANSPORTATION

R. Manzanarez
PROJECT ENGINEER

BRIDGE NO. 34-0006L/R

CU 04
EA 0120F1

KILOMETER POST 13.2/13.9

DISCREPANCIES REGARDING EARLIER REVISION DATES ↓

REVISION DATES (PRELIMINARY STAGE ONLY) 10/04 10/04 10/04 10/04 10/04 10/05 10/06

SAN FRANCISCO OAKLAND BAY BRIDGE
EAST SPAN SEISMIC SAFETY PROJECT
SELF-ANCHORED SUSPENSION BRIDGE
(SUPERSTRUCTURE & TOWER)

TOWER SHAFT DETAILS NO. 4

SHEET 115R OF

FILE => H:\bb\04-012001\sas\contract plans and ccos\cco\cco21\ast1004.dgn

USERNAME => ptom DATE PLOTTED => 23 APR 2007 TIME PLOTTED => 16:05:32

Caltrans Metric

REGISTERED ENGINEER - CIVIL

12-6-04
PLANS APPROVAL DATE

The State of California or its officers or agents shall not be responsible for the accuracy or completeness of electronic copies of this plan sheet.

REGISTERED PROFESSIONAL ENGINEER
Morvan N. Nader
No. C 054426
Exp. 12/31/07
CIVIL
STATE OF CALIFORNIA

T.Y. LIN / MOFFATT & NICHOL
825 BATTERY STREET
SAN FRANCISCO, CA 94111

Caltrans now has a web site! To get to the web site, go to: http://www.dot.ca.gov

DIST.	COUNTY	ROUTE	KILOMETER POST TOTAL PROJECT	SHEET NO.	TOTAL SHEETS
04	SF	80	13.2/13.9	532R	1204

DIST.	COUNTY	ROUTE	KILOMETER POST TOTAL PROJECT	SHEET NO.	TOTAL SHEETS
04	SF	80	13.2/13.9	538R2	1204

REGISTERED ENGINEER - CIVIL

12-6-04

PLANS APPROVAL DATE

REGISTERED PROFESSIONAL ENGINEER Marwan N. Nader No. C 054426 Exp. 12/31/07 CIVIL STATE OF CALIFORNIA

The State of California or its officers or agents shall not be responsible for the accuracy or completeness of electronic copies of this plan sheet.

T.Y. LIN / MOFFATT & NICHOL
825 BATTERY STREET
SAN FRANCISCO, CA 94111

Caltrans now has a web site! To get to the web site, go to: http://www.dot.ca.gov

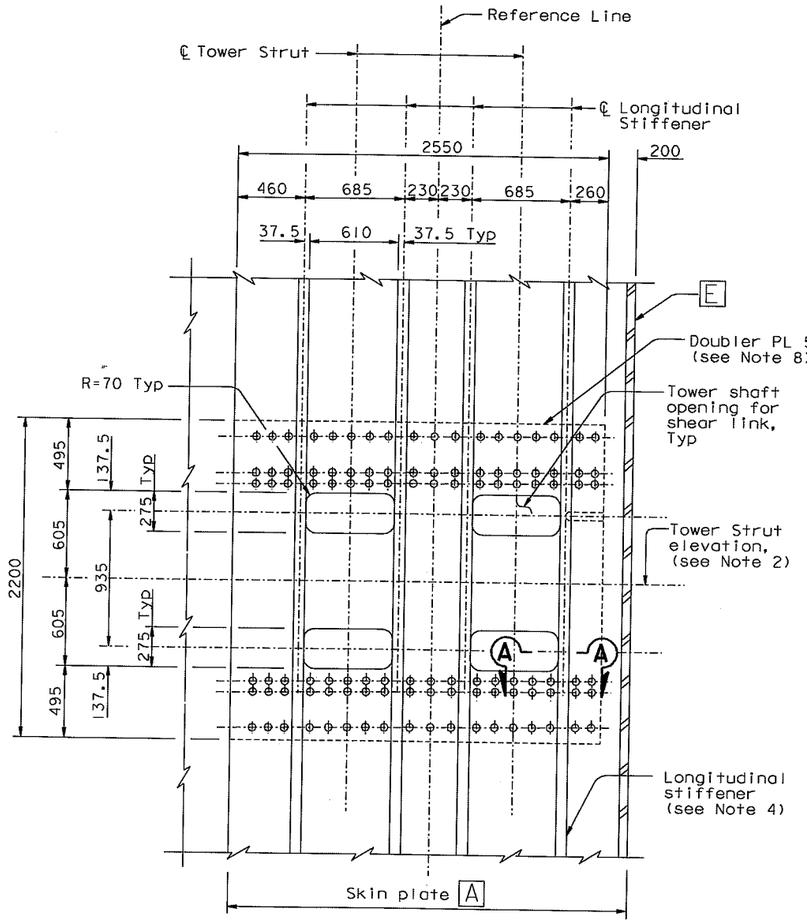

FOR STRUTS TYPE 1
1:20

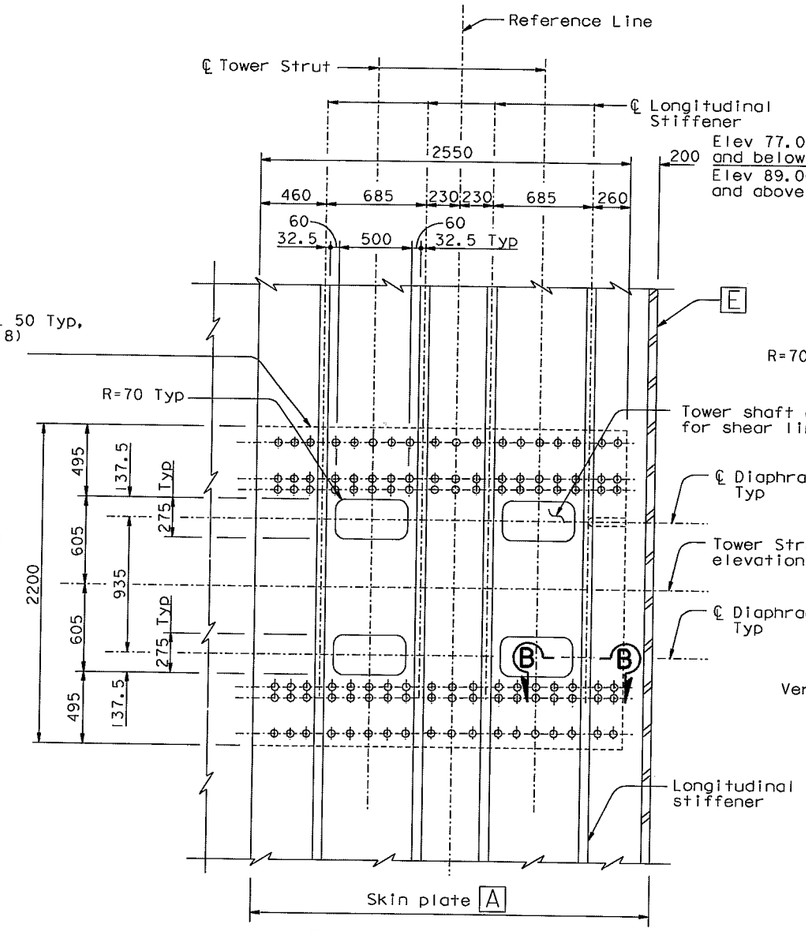

FOR STRUTS TYPE 2
1:20

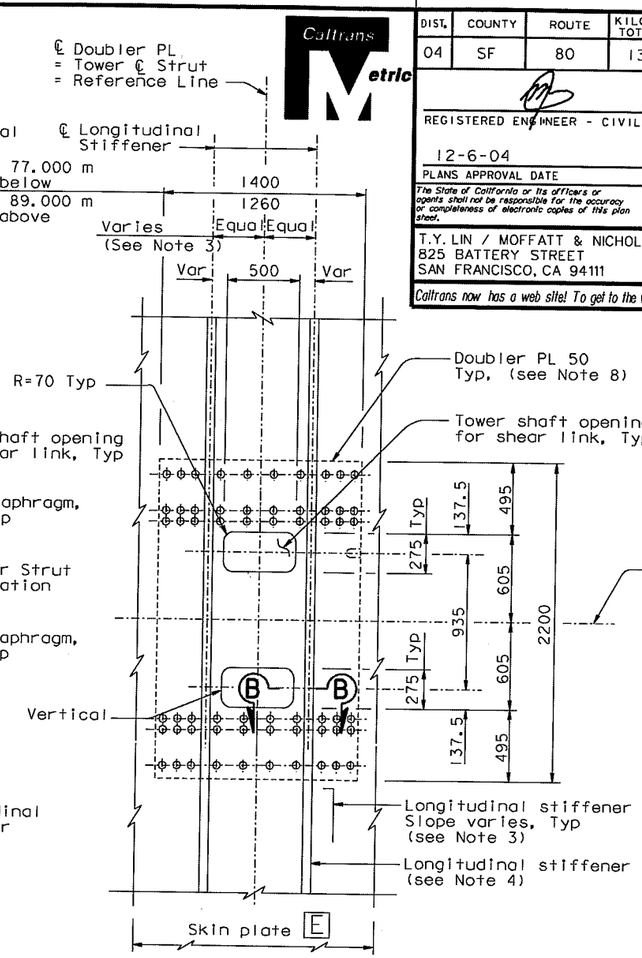

FOR STRUTS TYPE 3
1:20

TOWER SHAFT OPENING FOR SHEAR LINK (see Note 5 and 9)

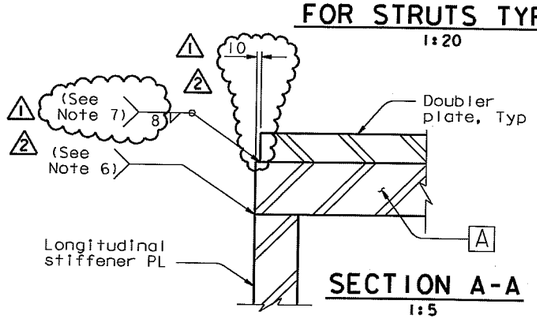

SECTION A-A
1:5

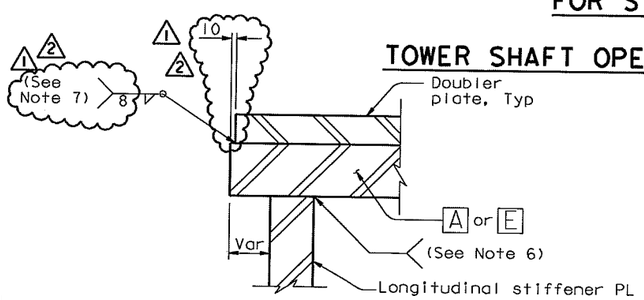

SECTION B-B
1:5

LEGEND:

A Skin Plate Designation

NOTES:

1. Horizontal stiffeners, diaphragm plates and other structure elements associated with tower strut are not shown for clarity.
2. For tower strut details, see "Tower Strut Details" sheets.
3. For longitudinal stiffener slopes details, see "Tower Shaft Details No. 7" sheet.
4. For longitudinal stiffener spacing and size, see "Tower Shaft Details No. 3" and "Tower Shaft Details No. 7" sheets.
5. For bolt layout, see "Tower Shaft Details No. 11" sheet.
6. For longitudinal stiffener to tower skin plate connection details, see "Tower Splice Details No. 2" sheet.
7. Weld all around doubler plate opening. (1)
8. Doubler plate shall be A709M HPS 485W.
9. Bolts for tower strut connection, not shown for clarity. For tower strut connection details, see "Tower Strut Details" sheets.
10. For Reference Line definition, see "Tower Strut Facade Details" sheets.

MARK	DATE	DESCRIPTIONS	BY	CH'D	CCO#
2	02/28/07	DOUBLER PLATE SEAL WELD	MN	NV	21
1	06/23/06	DOUBLER PLATE SEAL WELD	MN	NV	21

REVISIONS

CONTRACT CHANGE ORDER NO. ____
SHEET ___ OF ___

ALL DIMENSIONS ARE IN MILLIMETERS UNLESS OTHERWISE SHOWN

R. Valizadeh/V. Toan/Y.L./W.L./F.C.
DESIGN OVERSIGHT
SIGN OFF DATE 02/28/07
Rev. Date: 5-15-98

	BY	CHECKED
DESIGN	M. Nader	M. Guiyas
DETAILS	L. Rus	M. Guiyas
QUANTITIES	L. Rus	Y. Zhang

PREPARED FOR THE STATE OF CALIFORNIA DEPARTMENT OF TRANSPORTATION

R. Manzanarez
PROJECT ENGINEER

BRIDGE NO. 34-0006L/R
KILOMETER POST 13.2/13.9

SAN FRANCISCO OAKLAND BAY BRIDGE
EAST SPAN SEISMIC SAFETY PROJECT
SELF-ANCHORED SUSPENSION BRIDGE
(SUPERSTRUCTURE & TOWER)

TOWER SHAFT DETAILS NO. 10

ORIGINAL SCALE IN MILLIMETERS FOR REDUCED PLANS 0 10 20 30 40 50 60 70 80 90 100

CU 04
EA 0120F1

DISREGARD PRINTS BEARING EARLIER REVISION DATES

REVISION DATES (PRELIMINARY STAGE ONLY) 08/28/99 05/31/01 04/08/02 04/26/02 07/01/02 12/13/02

SHEET 121R2 OF

FILE => I:\bb\04-01200I\sas\contract plans and cco\cco\cco#21\supplem to cco#21\aetldll.dgn

USERNAME => oltshansk DATE PLOTTED => 16 MAR 2007 TIME PLOTTED => 13:10:59

100 % PS&E

DIST.	COUNTY	ROUTE	KILOMETER POST TOTAL PROJECT	SHEET NO.	TOTAL SHEETS
04	SF	80	13.2/13.9	539R2	1204

REGISTERED ENGINEER - CIVIL

12-6-04
PLANS APPROVAL DATE

REGISTERED PROFESSIONAL ENGINEER Marwan N. Nader No. C 054426 Exp. 12/31/07 CIVIL STATE OF CALIFORNIA

The State of California or its officers or agents shall not be responsible for the accuracy or completeness of electronic copies of this plan sheet.

T.Y. LIN / MOFFATT & NICHOL
825 BATTERY STREET
SAN FRANCISCO, CA 94111

Caltrans now has a web site! To get to the web site, go to: http://www.dot.ca.gov

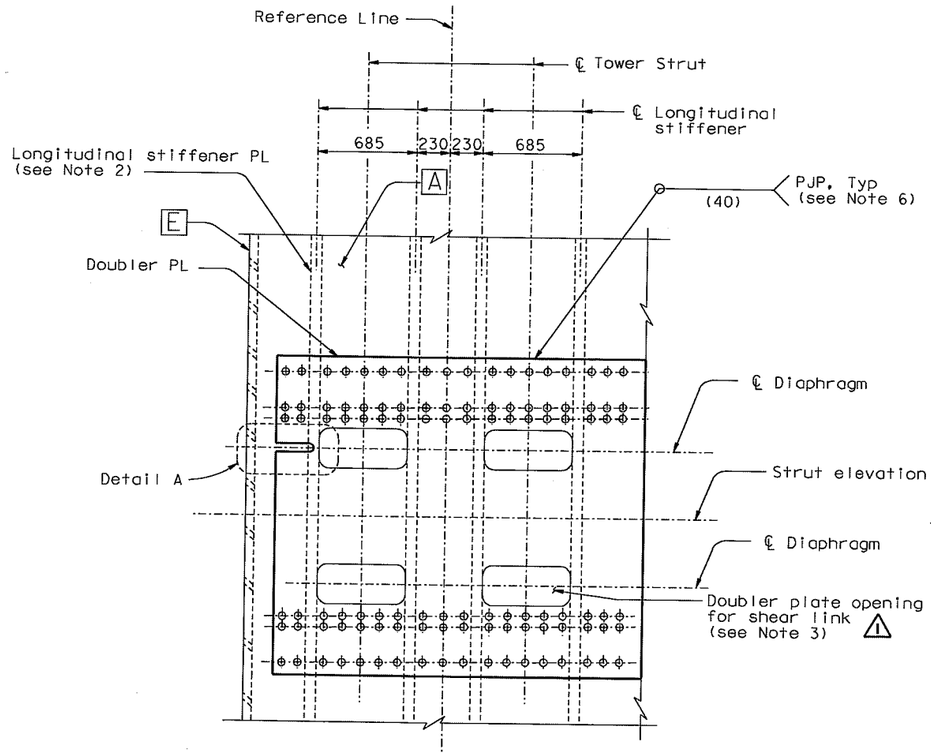

FOR STRUTS TYPE 1 AND TYPE 2
(Tower shaft opening for strut type 1 shown, strut type 2 similar)

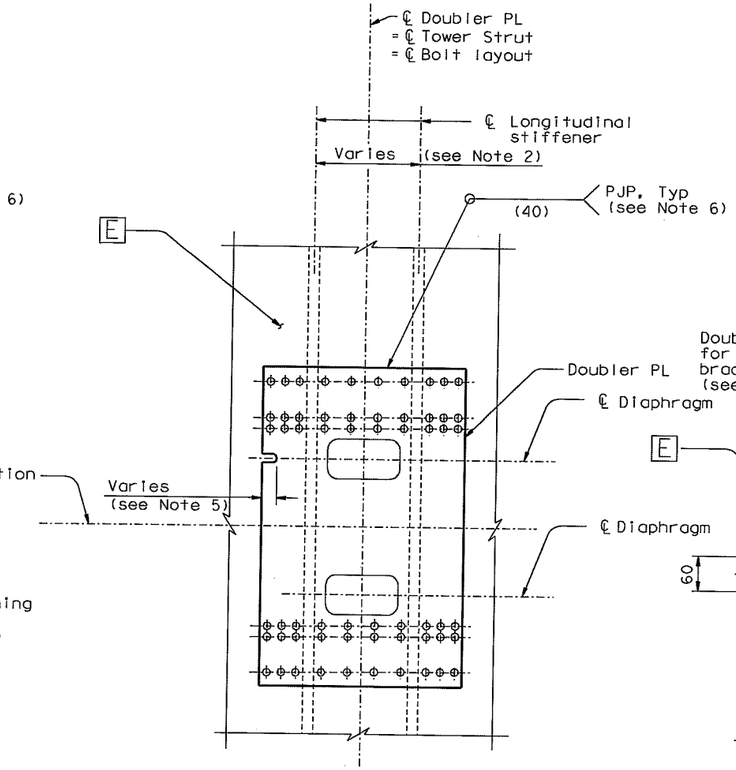

FOR STRUTS TYPE 3

BOLT LAYOUT (See Note 7 and 8)
1:20

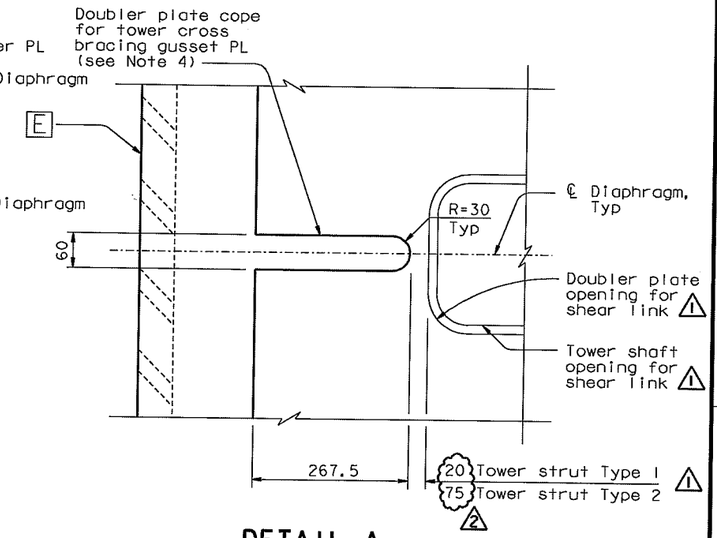

DETAIL A
1:5

LEGEND:

⌖ M24 A325-X HS Bolts

NOTES:

1. For doubler plate details, see "Tower Shaft Details No. 10" sheet.
2. For longitudinal stiffener spacing and size, see "Tower Shaft Details No. 3" and "Tower Shaft Details No. 7" sheets.
3. 1 Seal weld all around doubler plate opening. For details, see "Tower Shaft Details No. 10" sheet.
4. Doubler plate cope is only located at tower cross bracing elevations. For tower cross bracing details, see "Tower Strut Details No. 9" sheet.
5. Cope doubler plate as necessary to accommodate cross bracing gusset plate.
6. Filler metal shall match steel base metal A709M HPS 485W.
7. Bolts for tower strut connection not shown for clarity. For tower strut connection details, see "Tower Strut Details" sheets.
8. For bolt layout, see "Tower Strut Facade Details" sheet.
9. For Reference Line definition, see "Tower Strut Facade Details" sheets.

MARK	DATE	DESCRIPTIONS	BY	CH'D	CCO#
2	02/28/07	DOUBLER PLATE SEAL WELD	MN	NV	21
1	06/23/06	DOUBLER PLATE SEAL WELD	MN	NV	21

REVISIONS

CONTRACT CHANGE ORDER NO. ____
SHEET ____ OF ____

ALL DIMENSIONS ARE IN MILLIMETERS UNLESS OTHERWISE SHOWN

R. Valizadeh/V. Toan/Y.L./W.L./F.C.
DESIGN OVERSIGHT
Roger Valizadeh / Vong Toan / Y. Lin
SIGN OFF DATE 02/28/07
Rev. Date: 5-18-98

	BY	CHECKED
DESIGN	M. Nader	M. Gulyas
DETAILS	L. Rus	M. Gulyas
QUANTITIES	L. Rus	Y. Zhang

PREPARED FOR THE STATE OF CALIFORNIA DEPARTMENT OF TRANSPORTATION

R. Manzanarez
PROJECT ENGINEER

BRIDGE NO. 34-0006L/R
KILOMETER POST 13.2/13.9

SAN FRANCISCO OAKLAND BAY BRIDGE
EAST SPAN SEISMIC SAFETY PROJECT
SELF-ANCHORED SUSPENSION BRIDGE
(SUPERSTRUCTURE & TOWER)

TOWER SHAFT DETAILS NO. 11

ORIGINAL SCALE IN MILLIMETERS FOR REDUCED PLANS 0 10 20 30 40 50 60 70 80 90 100

CU 04
EA 0120F1

DISREGARD PRINTS BEARING EARLIER REVISION DATES

REVISION DATES (PRELIMINARY STAGE ONLY) 08/02/99 05/31/01 04/08/02 04/26/02 07/01/02 12/19/02

SHEET 122R2 OF

FILE => I:\bb\04-012001\sas\contract plans and cco\cco\cco#21\supplem to cco#21\aet1d12a.dgn

100 % PS&E

USERNAME => allshansky DATE PLOTTED => 16 MAR 2007 TIME PLOTTED => 13:15:13

DIST.	COUNTY	ROUTE	KILOMETER POST TOTAL PROJECT	SHEET No.	TOTAL SHEETS
04	SF	80	13.2/13.9	541R1	1204

REGISTERED ENGINEER - CIVIL
12-6-04
PLANS APPROVAL DATE
Marwan N. Nader No. C 054426 Exp. 12/31/07 CIVIL STATE OF CALIFORNIA REGISTERED PROFESSIONAL ENGINEER

The State of California or its officers or agents shall not be responsible for the accuracy or completeness of electronic copies of this plan sheet.

T.Y. LIN / MOFFATT & NICHOL
825 BATTERY STREET
SAN FRANCISCO, CA 94111

Caltrans now has a web site! To get to the web site, go to: http://www.dot.ca.gov

4

Caltrans Metric

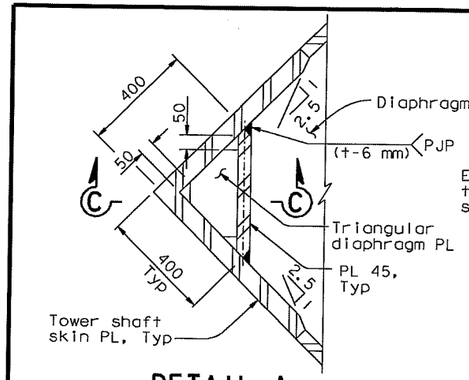

DETAIL A (See Note 2)
1:10

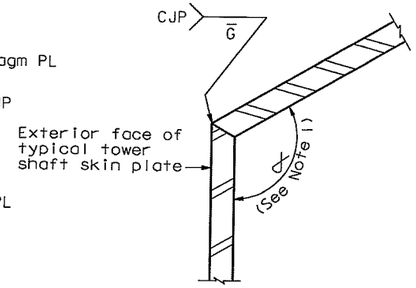

SECTION A-A
NTS
(Skin plate edge connection)
(See Note 8)

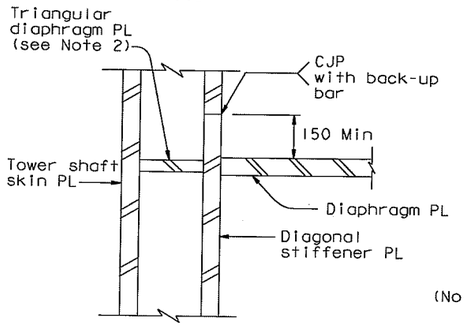

SECTION C-C
1:10

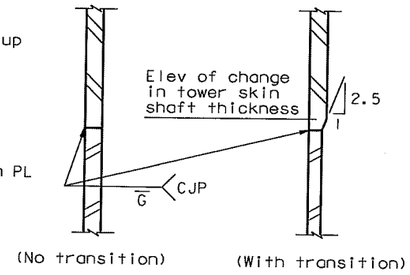

SECTION B-B
NTS
(Typical steel sheet and tower shaft segment connection UNO)

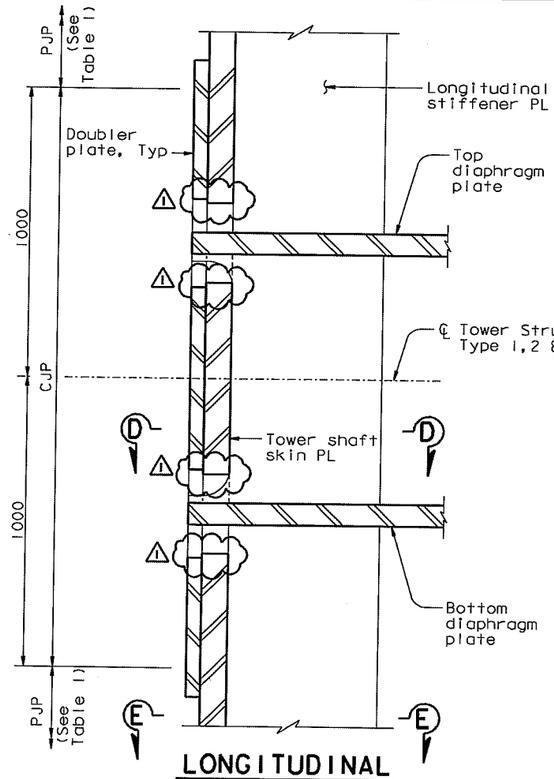

LONGITUDINAL STIFFENER CONNECTION
1:10

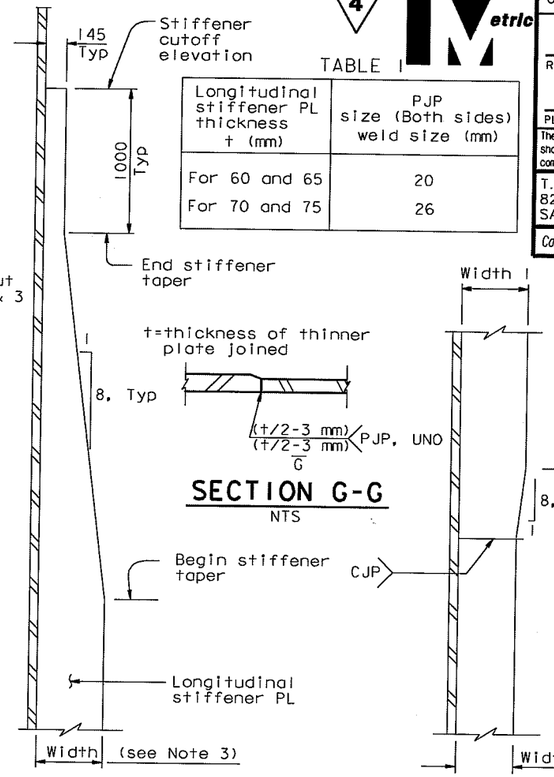

TABLE I

Longitudinal stiffener PL thickness t (mm)	PJP size (Both sides) weld size (mm)
For 60 and 65	20
For 70 and 75	26

SECTION G-G
NTS

STIFFENER CUT-OFF
1:20
(See Notes 6, 7)

STIFFENER TRANSITION (WIDTH)
1:20

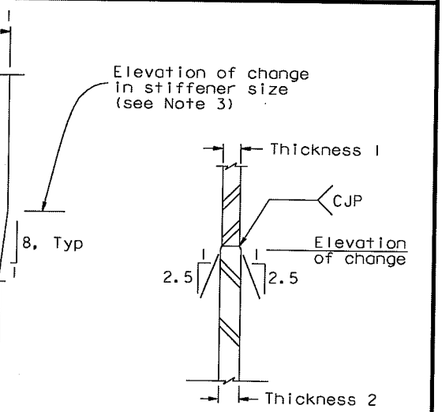

STIFFENER TRANSITION (THICKNESS)
1:10

LONGITUDINAL STIFFENER TAPER

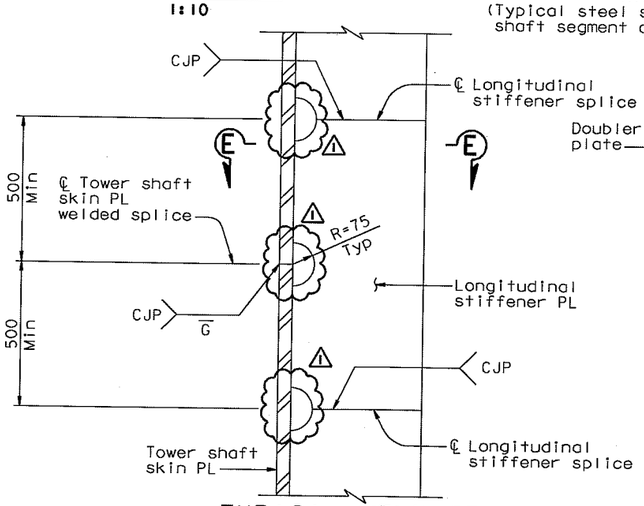

TYPICAL WELD SPLICE
1:10
(Between tower shaft segments)

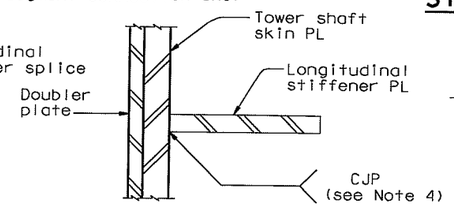

SECTION D-D
NTS

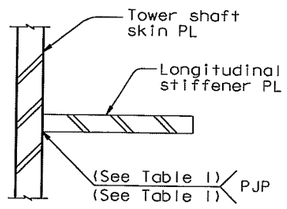

SECTION E-E
NTS

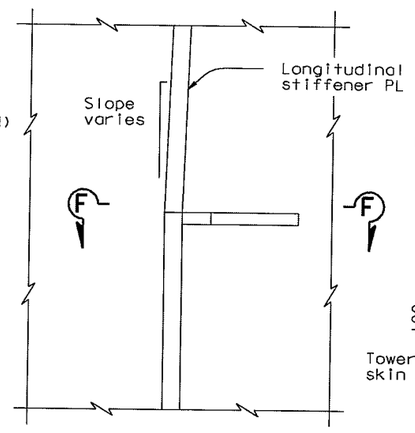

LONGITUDINAL STIFFENER KINK (See Note 5)
1:10

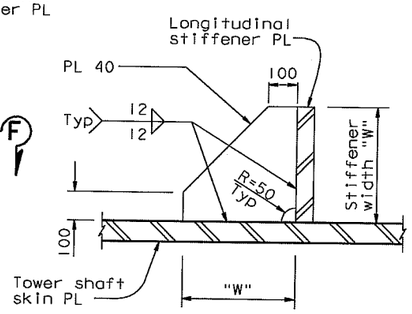

SECTION F-F

NOTES:

1. Angle ∝ Varies from 90° to 150°.
2. Triangular diaphragm plate shall be located at all diaphragm locations. For diaphragm locations, see "Tower Diaphragm Details No. 1" sheet.
3. For longitudinal stiffener size, see "Tower Shaft Details" sheets.
4. CJP weld shall be performed between the longitudinal stiffener plate and tower skin plate A and E only. Longitudinal stiffener (A1) shall be a CJP with back-up bar. For weld between longitudinal stiffeners and tower shaft skin plate B, C, D, see Table 1.
5. For longitudinal stiffener kink at elevation 89.000 m, see" Tower Diaphragm Details No. (12") sheet. 1
6. For cut-off of longitudinal stiffener (B4) and (E4), see "Tower Splice Details No. 7" sheet.
7. For cut-off of longitudinal stiffener (E2) see "Tower Splice Details No. 12" sheet.
8. This detail is also applicable for the tower shaft splice plates at the corners.

4 REVISED PER ADDENDUM NO. 4 DATED DECEMBER 9, 2005

ALL DIMENSIONS ARE IN MILLIMETERS UNLESS OTHERWISE SHOWN

R. Vallizadeh/V. Toan/Y.L./W.L./F.C.
DESIGN OVERSIGHT
SIGN OFF DATE 06/23/06
Rev. Date: 5-18-98

MARK	DATE	DESCRIPTIONS	BY	CH'D	CCO#
1	06/23/06	RATHOLE DIAMETER & MISC.	MN	NV	21

REVISIONS
CONTRACT CHANGE ORDER NO. ____
SHEET ___ OF ___

	BY	CHECKED
DESIGN	M. Nader	M. Gulyas
DETAILS	L. Rus	M. Gulyas
QUANTITIES	L. Rus	Y. Zhang

ORIGINAL SCALE IN MILLIMETERS FOR REDUCED PLANS 0 10 20 30 40 50 60 70 80 90 100

PREPARED FOR THE STATE OF CALIFORNIA DEPARTMENT OF TRANSPORTATION

R. Manzanarez
PROJECT ENGINEER

CU 04
EA 0120F1

BRIDGE NO. 34-0006L/R
KILOMETER POST 13.2/13.9

DISREGARD PRINTS BEARING EARLIER REVISION DATES

REVISION DATES (PRELIMINARY STAGE ONLY) 05/09/00 08/08/00 05/07/01 04/08/02 07/01/02 12/19/02 11/13/05

SHEET 124R1 OF

SAN FRANCISCO OAKLAND BAY BRIDGE
EAST SPAN SEISMIC SAFETY PROJECT
SELF-ANCHORED SUSPENSION BRIDGE
(SUPERSTRUCTURE & TOWER)

TOWER SPLICE DETAILS NO. 2

FILE => I:\bb\04-0120I\sas\contract plans and cco\cco\cco*21\aetsp02.dgn

USERNAME => ptom DATE PLOTTED => 23 APR 2007 TIME PLOTTED => 16:09:31

100 % PS&E

Tower Field Splice Alternatives

℄ Splice Elevation	All Bolted Splice	All Welded Splice
146.280	YES	YES
137.000	NO	YES
125.000	NO	YES
114.000	YES	YES
104.000	NO	YES
94.000	NO	YES
83.000	YES	YES
72.500	NO	YES
50.300	YES	YES
35.500	NO	YES
25.500	NO	YES

NOTES:

1. All tower field splices are optional.
2. For "All Bolted Splice" details, see "Tower Splice Details No.3" thru "Tower Splice Details No.22" sheets.
3. For "All Welded Splice" details, see "Tower Splice Details No.23" sheet. These field welded splices may be located within ±0.25 m of the indicated elevations.
4. For all tower skin plate bolted splices, the bolt heads shall be placed on the outside, UNO.

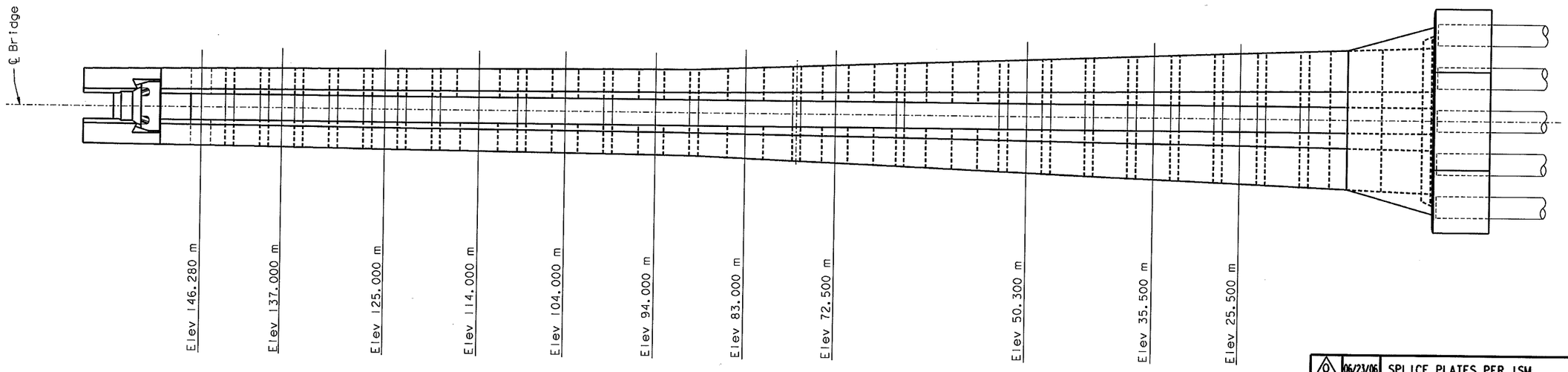

TOWER FIELD SPLICE LOCATIONS
1:250

MARK	DATE	DESCRIPTIONS	BY	CH'D	CCO#
0	06/23/06	SPLICE PLATES PER ISM	MN	NV	21

REVISIONS

CONTRACT CHANGE ORDER NO. ____
SHEET ____ OF ____

ALL DIMENSIONS ARE IN MILLIMETERS UNLESS OTHERWISE SHOWN

Caltrans Metric

DIST.	COUNTY	ROUTE	KILOMETER POST TOTAL PROJECT	SHEET NO.	TOTAL SHEETS
04	SF	80	13.2/13.9	541S1	1204

REGISTERED ENGINEER - CIVIL
06-23-06
PLANS APPROVAL DATE
REGISTERED PROFESSIONAL ENGINEER Morwan N. Nader No. C 054426 Exp. 12/31/07 CIVIL STATE OF CALIFORNIA

The State of California or its officers or agents shall not be responsible for the accuracy or completeness of electronic copies of this plan sheet.

T.Y. LIN / MOFFATT & NICHOL
825 BATTERY STREET
SAN FRANCISCO, CA 94111

To get to the web site, go to: http://www.dot.ca.gov

R. Valizadeh/V. Toan/Y.L./W.L./F.C.
DESIGN OVERSIGHT
Roya Valizadeh / Vong P. Toan / Y. Liu
SIGN OFF DATE 06/23/06
Rev. Date: 5-18-98

	BY	CHECKED
DESIGN	M. Nader	N. Vo
DETAILS	N. Vo	G. Baker
QUANTITIES	N. Vo	G. Baker

PREPARED FOR THE STATE OF CALIFORNIA DEPARTMENT OF TRANSPORTATION

R. Manzanarez
PROJECT ENGINEER

BRIDGE NO. 34-0006L/R
KILOMETER POST 13.2/13.9

SAN FRANCISCO OAKLAND BAY BRIDGE
EAST SPAN SEISMIC SAFETY PROJECT
SELF-ANCHORED SUSPENSION BRIDGE
(SUPERSTRUCTURE & TOWER)

TOWER SPLICE DETAILS NO. 2A

ORIGINAL SCALE IN MILLIMETERS FOR REDUCED PLANS 0 10 20 30 40 50 60 70 80 90 100

CU 04
EA 0120F1

DISREGARD PRINTS BEARING EARLIER REVISION DATES 06/23/06

REVISION DATES (PRELIMINARY STAGE ONLY)

SHEET 124S1 OF

FILE => L:\BB\04-012001\SAS\Contract Plans and CCO\CCO\CCO#21\DGN\aetsp02s.dgn

USERNAME => vigonovsk DATE PLOTTED => 22 MAY 2007 TIME PLOTTED => 09:14:08

DIST.	COUNTY	ROUTE	KILOMETER POST TOTAL PROJECT	SHEET NO.	TOTAL SHEETS
04	SF	80	13.2/13.9	542R1	1204

REGISTERED ENGINEER - CIVIL

12-6-04
PLANS APPROVAL DATE

The State of California or its officers or agents shall not be responsible for the accuracy or completeness of electronic copies of this plan sheet.

REGISTERED PROFESSIONAL ENGINEER Marwan N. Nader No. C 054426 Exp. 12/31/07 CIVIL STATE OF CALIFORNIA

T.Y. LIN / MOFFATT & NICHOL
825 BATTERY STREET
SAN FRANCISCO, CA 94111

Caltrans now has a web site! To get to the web site, go to: http://www.dot.ca.gov

TABLE 1

Optional Tower Bolted Splice Locations

Splice	Elevation (m)
1	50.300
2	83.000
3	114.000
4	146.280

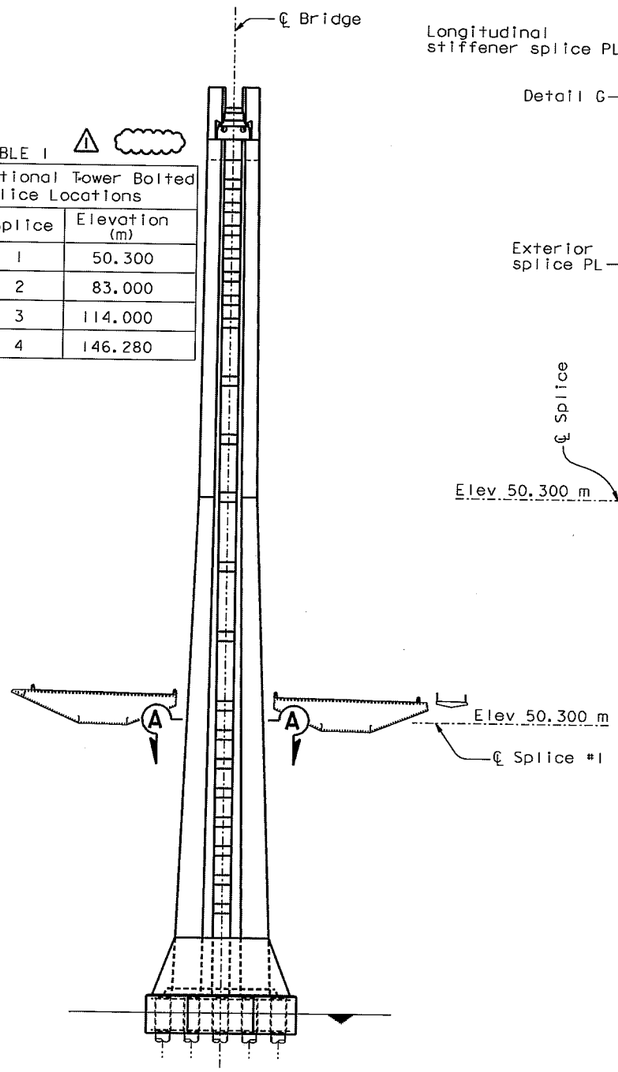

TOWER SPLICE LOCATION
1:500

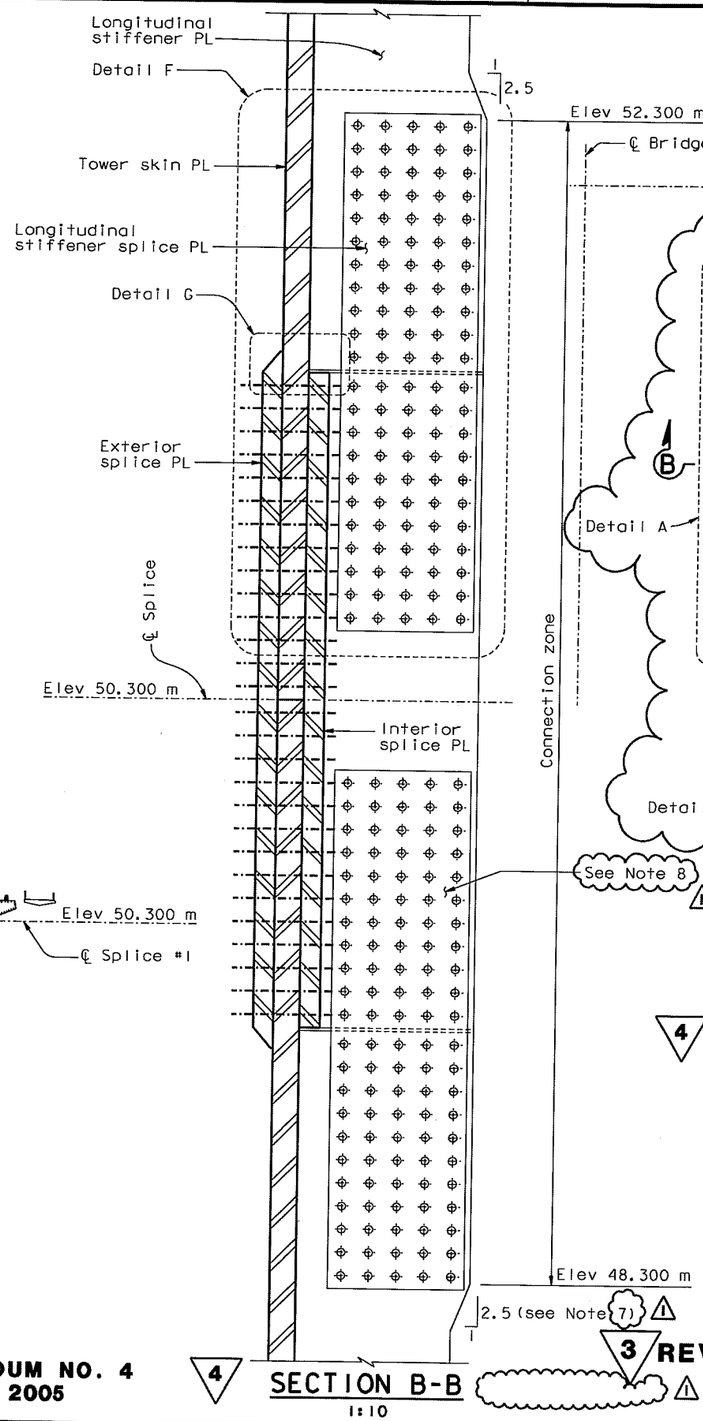

SECTION B-B
1:10

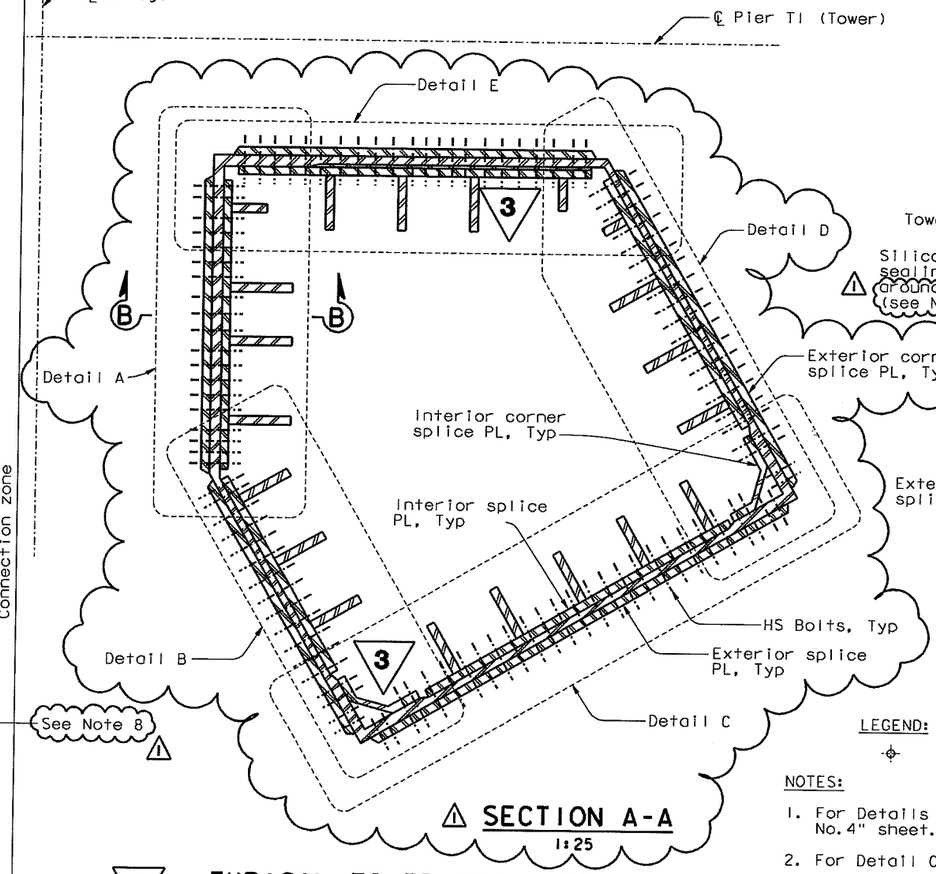

SECTION A-A
1:25

TYPICAL TOWER SHAFT SPLICE #1

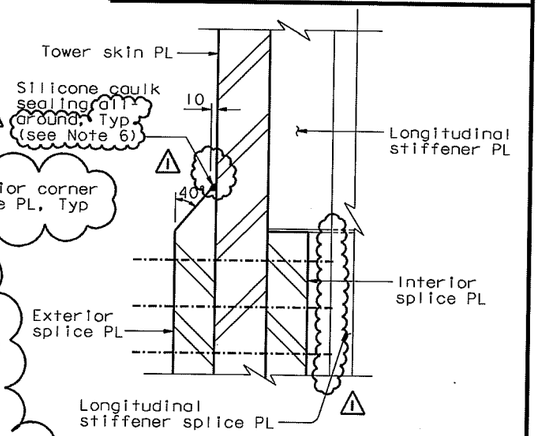

DETAIL G
1:5

LEGEND:

M27 A490-X HS Bolt

NOTES:

1. For Details A and B, see "Tower Splice Details No. 4" sheet.
2. For Detail C, see "Tower Splice Details No. 5" sheet.
3. For Details D and E, see "Tower Splice Details No. 6" sheet.
4. For Detail F, see "Tower Splice Details No. 7" sheet.
5. The tower splice connections are designed as slip critical connections with class B contact surface (slip coefficient 0.5). The Contractor shall ensure that the flatness requirements are met at the faying surfaces.
6. Silicone caulk sealing shall be applied around the perimeter (horizontal and vertical edges) of all exterior splice plates.
7. Stiffeners A1, E7, and D4 shall not be tapered.
8. For stiffeners A1, B4, E4, E7, and D4, see "Tower Splice Details No. 7" sheet.

MARK	DATE	DESCRIPTIONS	BY	CH'D	CCO#
1	06/23/06	SPLICE PLATES PER ISM	MN	NV	21

REVISIONS

CONTRACT CHANGE ORDER NO. ____
SHEET ___ OF ___

4 REVISED PER ADDENDUM NO. 4 DATED DECEMBER 9, 2005

3 REVISED PER ADDENDUM NO. 3 DATED NOVEMBER 7, 2005

ALL DIMENSIONS ARE IN MILLIMETERS UNLESS OTHERWISE SHOWN

R. Valizadeh/V. Toan/Y.L./W.L./F.C.
DESIGN OVERSIGHT
Roger Valizadeh / Vong P. Toan / Y. Liu
SIGN OFF DATE 06/23/06
Rev. Date: 5-18-98

DESIGN	BY M. Nader	CHECKED M. Gulyas	
DETAILS	BY J. Lopez	CHECKED N. Vo	
QUANTITIES	BY L. Rus	CHECKED Y. Zhang	

PREPARED FOR THE STATE OF CALIFORNIA DEPARTMENT OF TRANSPORTATION

R. Manzanarez
PROJECT ENGINEER

BRIDGE NO. 34-0006L/R
KILOMETER POST 13.2/13.9

SAN FRANCISCO OAKLAND BAY BRIDGE
EAST SPAN SEISMIC SAFETY PROJECT
SELF-ANCHORED SUSPENSION BRIDGE
(SUPERSTRUCTURE & TOWER)

TOWER SPLICE DETAILS NO. 3

ORIGINAL SCALE IN MILLIMETERS FOR REDUCED PLANS 0 10 20 30 40 50 60 70 80 90 100

CU 04
EA 0120F1

DISREGARD PRINTS BEARING EARLIER REVISION DATES

REVISION DATES (PRELIMINARY STAGE ONLY) 05/31/01 04/08/02 07/01/02 12/19/02 10/13/05 11/13/05 12/07/05

SHEET 125R1 OF

FILE => I:\bb\04-012001\sas\contract plans and cco\cco\cco#21\aetsp03.dgn

100 % PS&E

USERNAME => ptom DATE PLOTTED => 23 APR 2007 TIME PLOTTED => 16:12:38

DIST.	COUNTY	ROUTE	KILOMETER POST TOTAL PROJECT	SHEET NO.	TOTAL SHEETS
04	SF	80	13.2/13.9	543R1	1204

REGISTERED ENGINEER - CIVIL

12-6-04

PLANS APPROVAL DATE

REGISTERED PROFESSIONAL ENGINEER Marwan N. Nader No. C 054426 Exp. 12/31/07 CIVIL STATE OF CALIFORNIA

The State of California or its officers or agents shall not be responsible for the accuracy or completeness of electronic copies of this plan sheet.

T.Y. LIN / MOFFATT & NICHOL
825 BATTERY STREET
SAN FRANCISCO, CA 94111

Caltrans now has a web site! To get to the web site, go to: http://www.dot.ca.gov

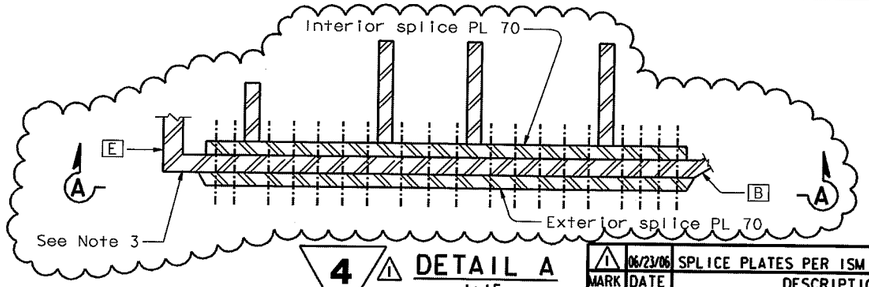

4 △1 DETAIL A
1:15

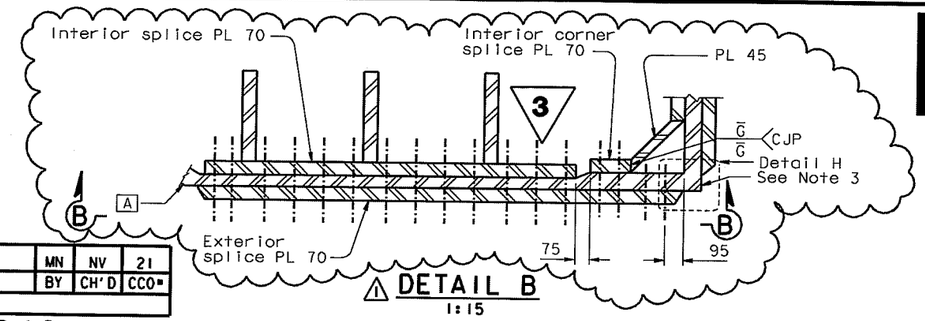

△1 DETAIL B
1:15

MARK	DATE	DESCRIPTIONS	BY	CH'D	CCO#
△1	06/23/06	SPLICE PLATES PER ISM	MN	NV	21

REVISIONS

CONTRACT CHANGE ORDER NO. ____
SHEET ___ OF ___

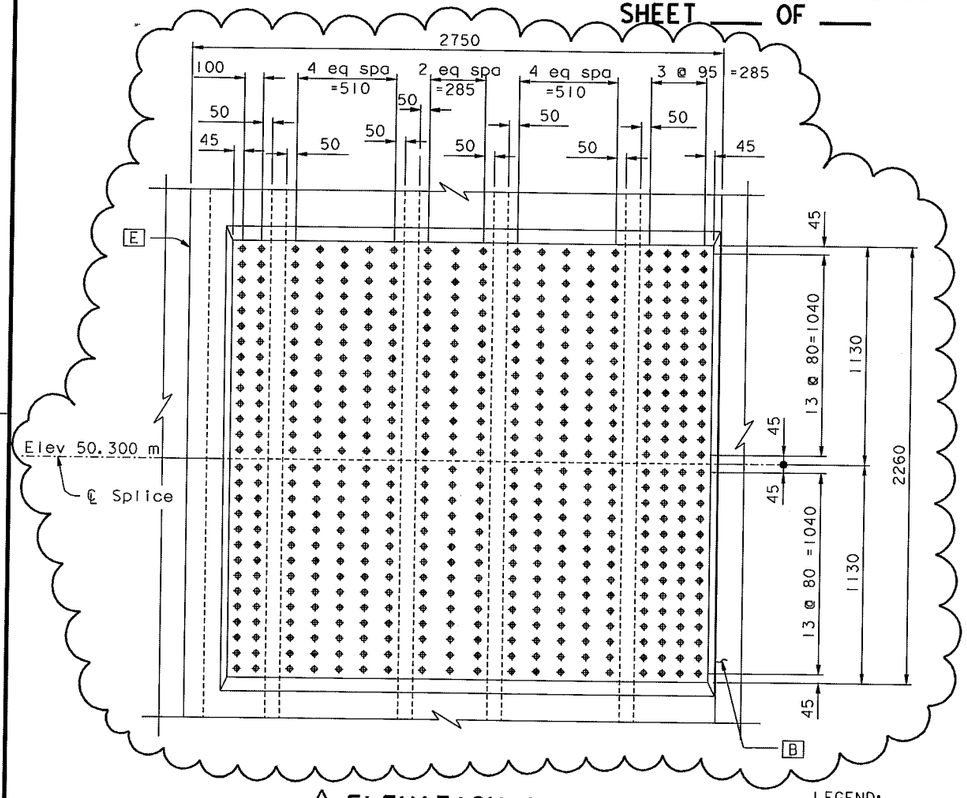

△1 ELEVATION A-A
1:15

TOWER SKIN PLATE A

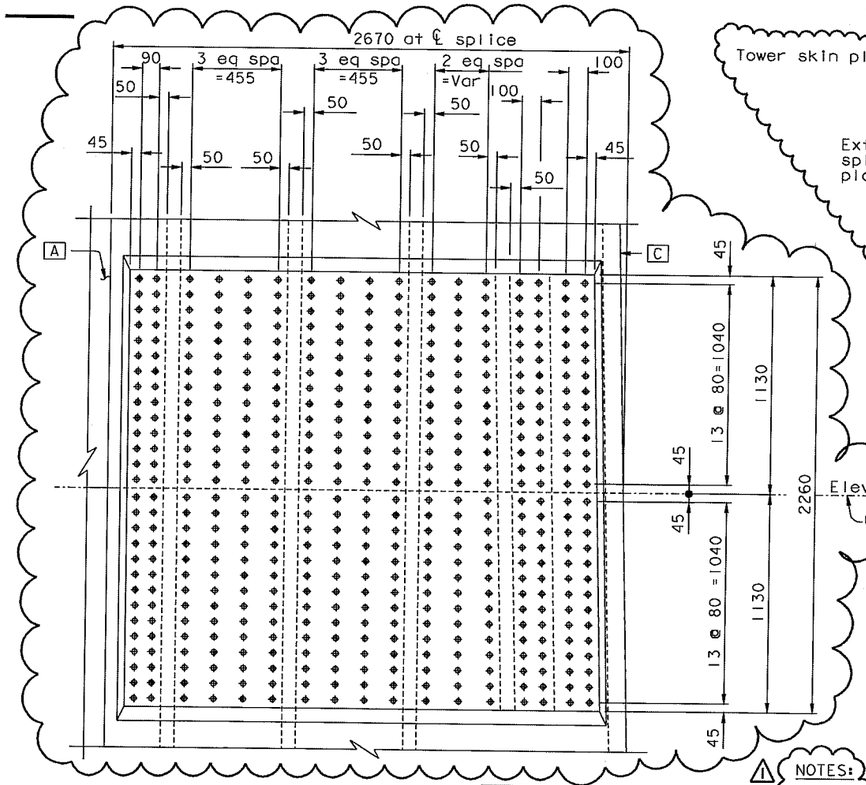

△1 ELEVATION B-B
1:15

3

TOWER SKIN PLATE B

LEGEND:

⊕ M27 A490-X HS Bolts

+ (12) Dia cap screw drilled in △1 tapped hole

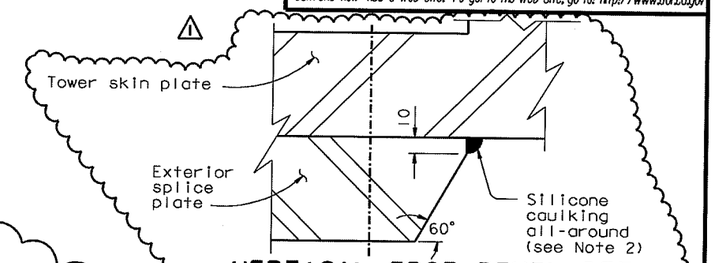

VERTICAL EDGE BEVEL DETAIL
(Typical all exterior splice plates)
NTS

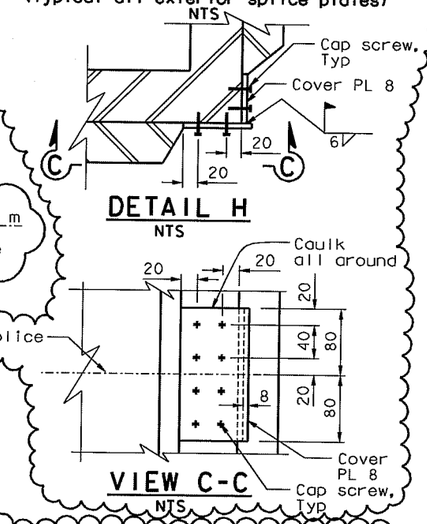

DETAIL H
NTS

VIEW C-C
NTS

△1 NOTES:

1. The tower splice connections are designed as slip critical connections with class B contact surface (slip coefficient 0.5). The Contractor shall ensure that the flatness requirements are met at the faying surfaces.
2. Silicone caulk sealing shall be applied around the perimeter (horizontal and vertical edges) of all exterior splice plates.
3. Skin plate splice seam not covered by exterior splice plate shall be covered by cover plate and secured by cap screws with 8 mm all-around silicone caulk sealing (see Detail H). Corner CD is shown in Detail H. Corners AB, BC, DE and EA similar.
4. Elevation view of adjacent skin plate not shown for clarity.

3 REVISED PER ADDENDUM NO. 3 DATED NOVEMBER 7, 2005

4 REVISED PER ADDENDUM NO. 4 DATED DECEMBER 9, 2005

ALL DIMENSIONS ARE IN MILLIMETERS UNLESS OTHERWISE SHOWN

R. Valizadeh/V. Toan/Y.L./W.L./F.C.
DESIGN OVERSIGHT
Roya Valizadeh / Vong P. Toan / Y. Liu
SIGN OFF DATE 06/23/06

Rev. Date: 5-18-98

	BY	CHECKED	
DESIGN	M. Nader	M. Gulyas	
DETAILS	J. Lopez	N. Vo	
QUANTITIES	J. Lopez	Y. Zhang	

PREPARED FOR THE STATE OF CALIFORNIA DEPARTMENT OF TRANSPORTATION

R. Manzanarez
PROJECT ENGINEER

BRIDGE NO. 34-0006L/R
KILOMETER POST 13.2/13.9

SAN FRANCISCO OAKLAND BAY BRIDGE
EAST SPAN SEISMIC SAFETY PROJECT
SELF-ANCHORED SUSPENSION BRIDGE
(SUPERSTRUCTURE & TOWER)

TOWER SPLICE DETAILS NO. 4

ORIGINAL SCALE IN MILLIMETERS FOR REDUCED PLANS 0 10 20 30 40 50 60 70 80 90 100

CU 04
EA 0120F1

DISREGARD PRINTS BEARING EARLIER REVISION DATES

REVISION DATES (PRELIMINARY STAGE ONLY) 08/30/99 05/30/01 01/08/02 07/01/02 12/13/02 10/13/05 11/13/05

SHEET 126R1 OF

FILE => I:\bb\04-012001\sos\contract plans and cco\cco\cco#21\detsp04.dgn

USERNAME => prom DATE PLOTTED => 23 APR 2007 TIME PLOTTED => 16:13:44

100 % PS&E

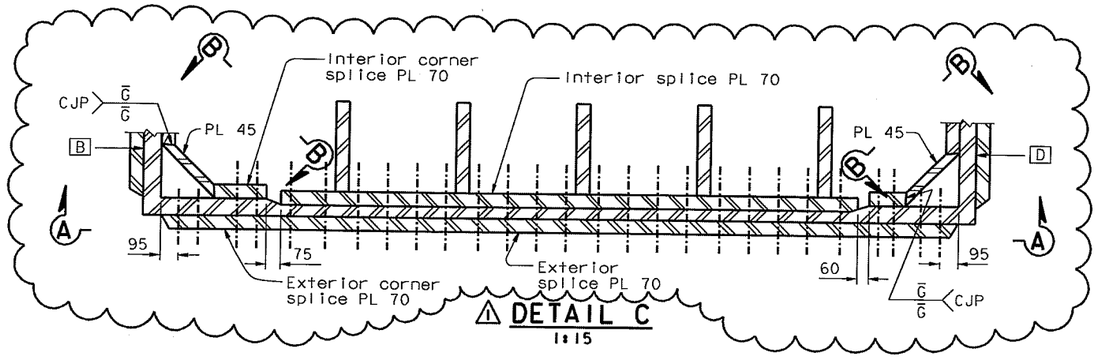

DETAIL C
1:15

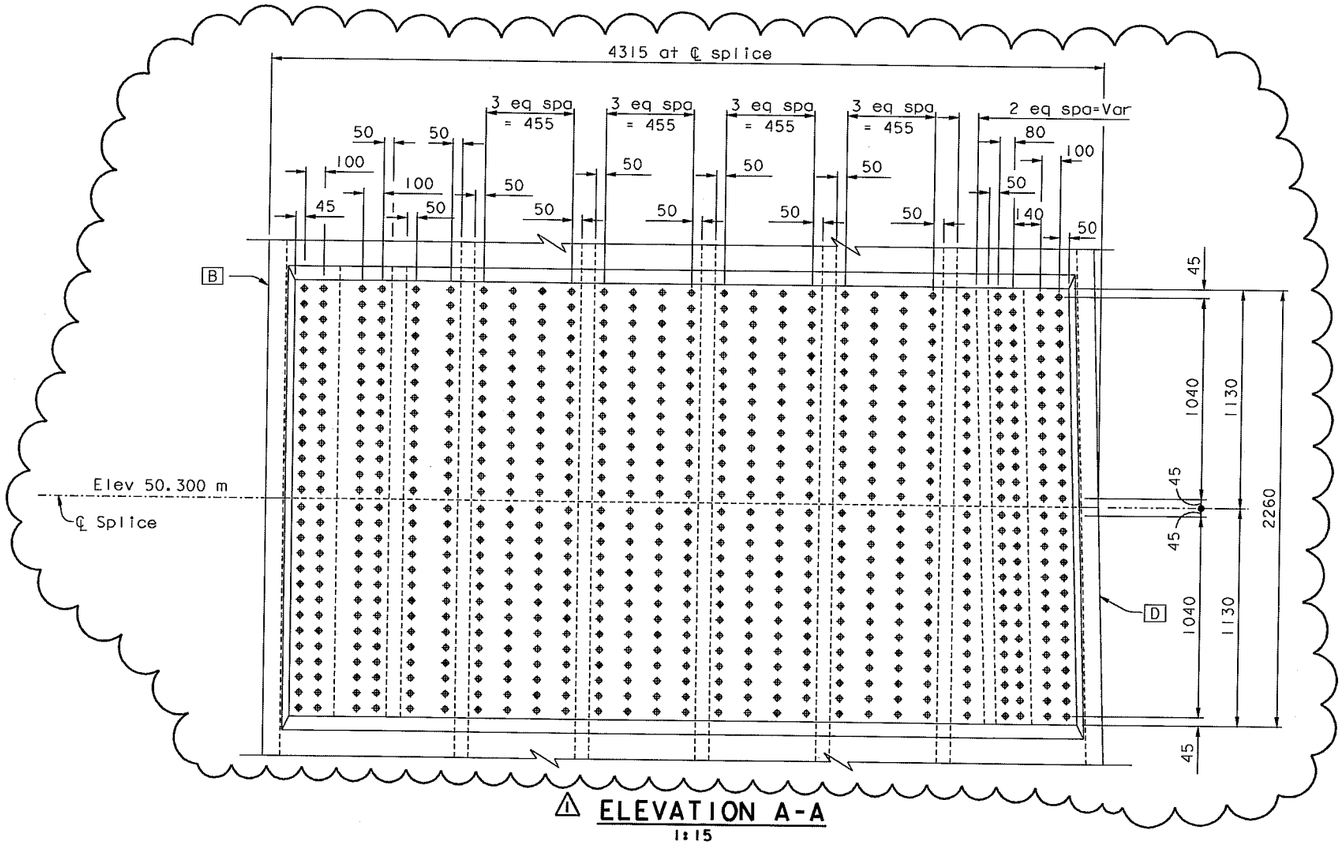

ELEVATION A-A
1:15

TOWER SKIN PLATE C

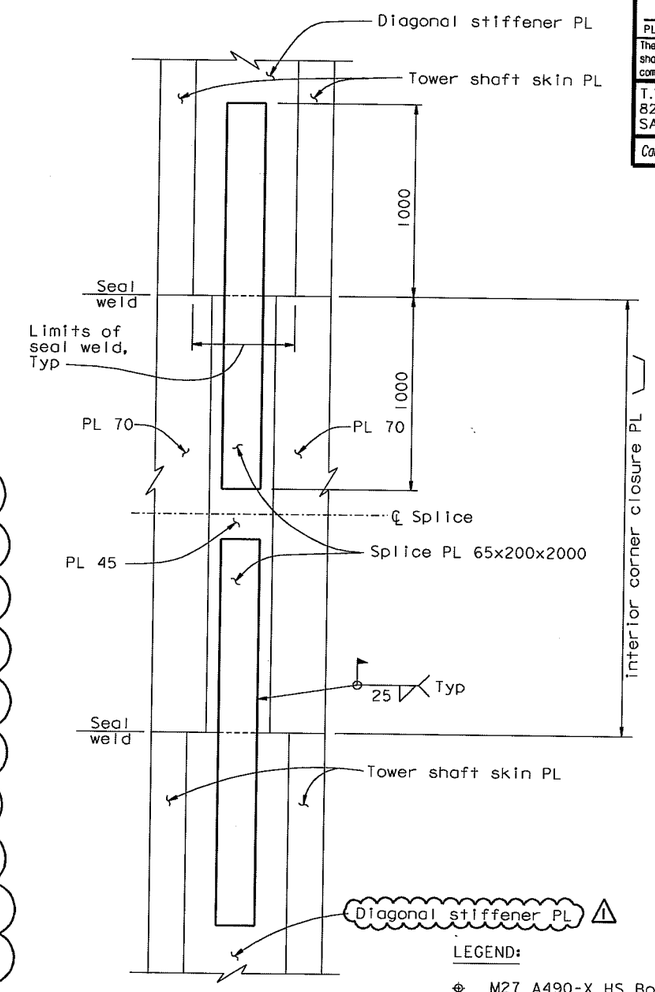

ELEVATION B-B
1:15

LEGEND:

⊕ M27 A490-X HS Bolts

NOTES:

1. The tower splice connections are designed as slip critical connections with class B contact surface (slip coefficient 0.5). The Contractor shall ensure that the flatness requirements are met at the faying surfaces.
2. Elevation view of adjacent skin plate not shown for clarity.

MARK	DATE	DESCRIPTIONS	BY	CH'D	CCO#
1	06/23/06	SPLICE PLATES PER ISM	MN	NV	21

REVISIONS

CONTRACT CHANGE ORDER NO. ____
SHEET ___ OF ___

ALL DIMENSIONS ARE IN MILLIMETERS UNLESS OTHERWISE SHOWN

DIST.	COUNTY	ROUTE	KILOMETER POST TOTAL PROJECT	SHEET NO.	TOTAL SHEETS
04	SF	80	13.2/13.9	544R1	1204

REGISTERED ENGINEER - CIVIL
12-6-04
PLANS APPROVAL DATE

REGISTERED PROFESSIONAL ENGINEER Marwan N. Nader No. C 054426 Exp. 12/31/07 CIVIL STATE OF CALIFORNIA

The State of California or its officers or agents shall not be responsible for the accuracy or completeness of electronic copies of this plan sheet.

T.Y. LIN / MOFFATT & NICHOL
825 BATTERY STREET
SAN FRANCISCO, CA 94111

Caltrans now has a web site! To get to the web site, go to: http://www.dot.ca.gov

R. Valizadeh/V. Toan/Y.L./W.L./F.C.
DESIGN OVERSIGHT
Roger Valizadeh / Vong Toan / Y. Liu
SIGN OFF DATE 06/23/06
Rev. Date: 5-18-98

	BY	CHECKED
DESIGN	M. Nader	M. Gulyas
DETAILS	J. Lopez	N. Vo
QUANTITIES	L. Rus	Y. Zhang

PREPARED FOR THE STATE OF CALIFORNIA DEPARTMENT OF TRANSPORTATION

R. Manzanarez
PROJECT ENGINEER

BRIDGE NO. 34-0006L/R
KILOMETER POST 13.2/13.9

SAN FRANCISCO OAKLAND BAY BRIDGE
EAST SPAN SEISMIC SAFETY PROJECT
SELF-ANCHORED SUSPENSION BRIDGE
(SUPERSTRUCTURE & TOWER)

TOWER SPLICE DETAILS NO. 5

ORIGINAL SCALE IN MILLIMETERS FOR REDUCED PLANS 0 10 20 30 40 50 60 70 80 90 100

CU 04
EA 0120F1

DISREGARD PRINTS BEARING EARLIER REVISION DATES
REVISION DATES (PRELIMINARY STAGE ONLY) 08/02/99 05/31/01 04/08/02 07/01/02 12/19/02
SHEET 127R1 OF

FILE => I:\bb\04-012001\sas\contract plans and cco\cco\cco#21\aetsp05.dgn

100 % PS&E
DATE PLOTTED => 23 APR 2007 TIME PLOTTED => 16:15:03
USERNAME => ptom

DIST.	COUNTY	ROUTE	KILOMETER POST TOTAL PROJECT	SHEET NO.	TOTAL SHEETS
04	SF	80	13.2/13.9	545R1	1204

REGISTERED ENGINEER - CIVIL

12-6-04
PLANS APPROVAL DATE

REGISTERED PROFESSIONAL ENGINEER
Marwan N. Nader
No. C 054426
Exp. 12/31/07
CIVIL
STATE OF CALIFORNIA

The State of California or its officers or agents shall not be responsible for the accuracy or completeness of electronic copies of this plan sheet.

T.Y. LIN / MOFFATT & NICHOL
825 BATTERY STREET
SAN FRANCISCO, CA 94111

Caltrans now has a web site! To get to the web site, go to: http://www.dot.ca.gov

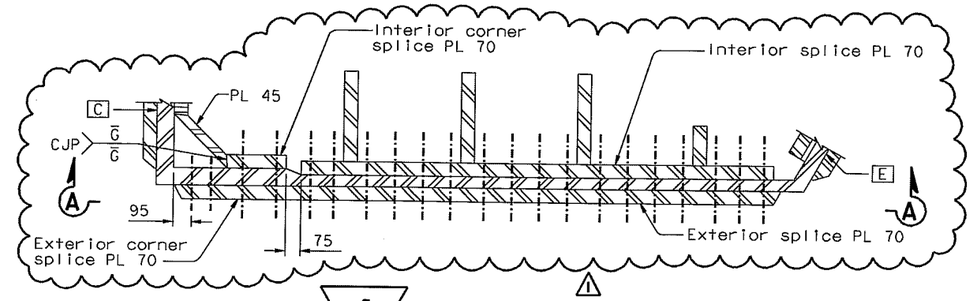

4 DETAIL D
1:15

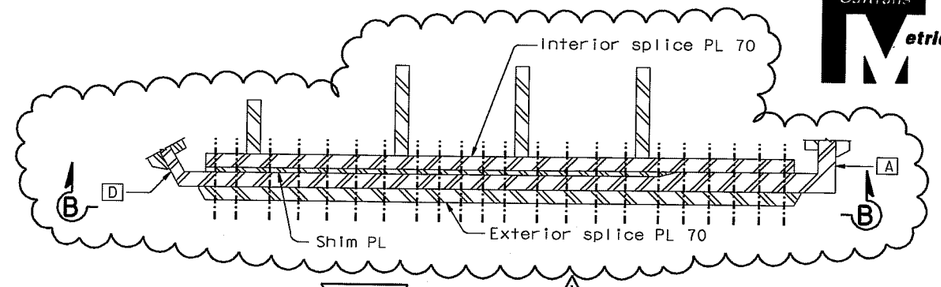

4 DETAIL E
1:15

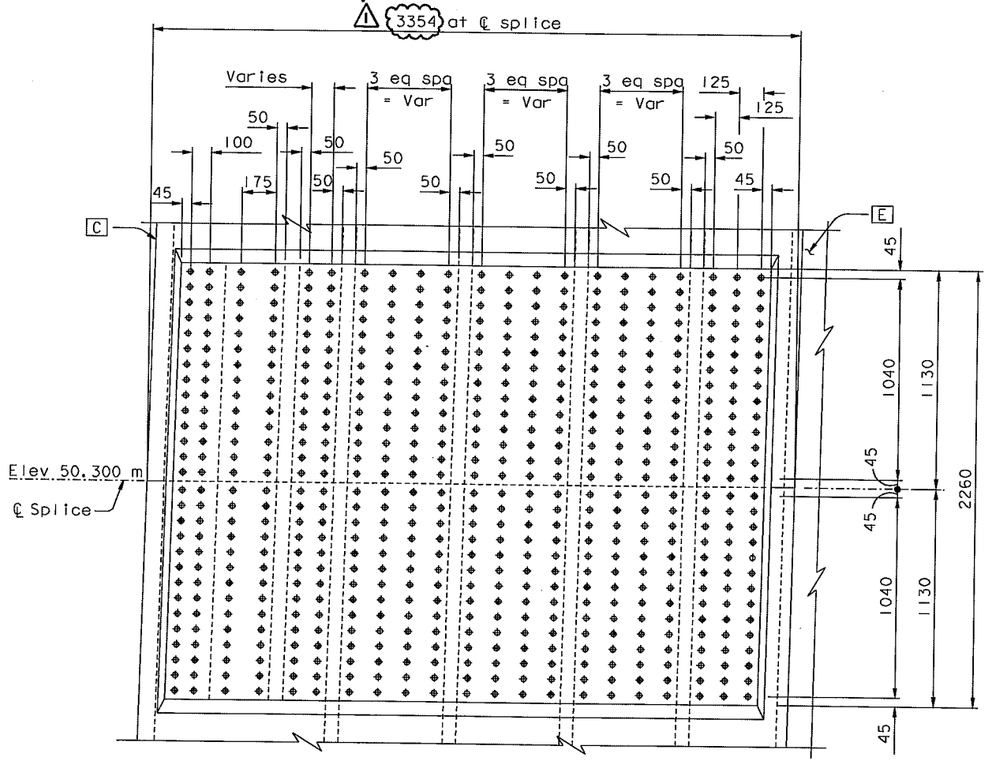

ELEVATION A-A
1:15

TOWER SKIN PLATE D

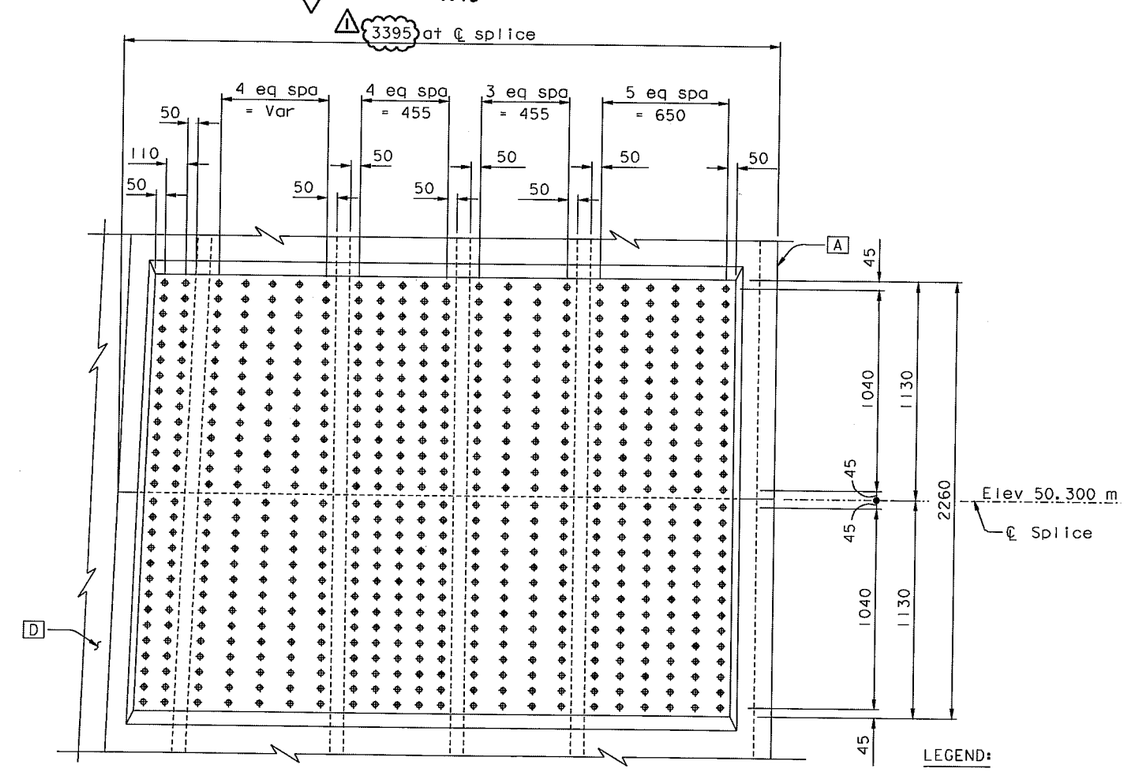

ELEVATION B-B
1:15

TOWER SKIN PLATE E

LEGEND:

⊕ M27 A490-X HS Bolts

MARK	DATE	DESCRIPTIONS	BY	CH'D	CCO#
1	06/23/06	SPLICE PLATES PER ISM	MN	NV	21

REVISIONS

CONTRACT CHANGE ORDER NO. ____
SHEET ____ OF ____

NOTES:

1. The tower splice connections are designed as slip critical connections with class B contact surface (slip coefficient 0.5). The Contractor shall ensure that the flatness requirements at the faying surfaces and the geometry control are met.
2. Elevation view of adjacent skin plate not shown for clarity.

4 REVISED PER ADDENDUM NO. 4 DATED DECEMBER 9, 2005

ALL DIMENSIONS ARE IN MILLIMETERS UNLESS OTHERWISE SHOWN

R. Valizadeh/V. Toan/Y.L./W.L./F.C.
DESIGN OVERSIGHT
Roger Valizadeh / Vong P. Toan / Y. Liu
SIGN OFF DATE 06/23/06
Rev. Date: 5-18-98

	BY	CHECKED
DESIGN	M. Nader	N. Vo
DETAILS	J. Lopez	N. Vo
QUANTITIES	J. Lopez	N. Vo

PREPARED FOR THE STATE OF CALIFORNIA DEPARTMENT OF TRANSPORTATION

R. Manzanarez
PROJECT ENGINEER

BRIDGE NO. 34-0006L/R
KILOMETER POST 13.2/13.9

SAN FRANCISCO OAKLAND BAY BRIDGE
EAST SPAN SEISMIC SAFETY PROJECT
SELF-ANCHORED SUSPENSION BRIDGE
(SUPERSTRUCTURE & TOWER)

TOWER SPLICE DETAILS NO. 6

ORIGINAL SCALE IN MILLIMETERS FOR REDUCED PLANS 0 10 20 30 40 50 60 70 80 90 100

CU 04
EA 0120F1

DISREGARD PRINTS BEARING EARLIER REVISION DATES

REVISION DATES (PRELIMINARY STAGE ONLY) 08/02/99 05/31/01 04/08/02 07/01/02 12/19/02 11/13/05

SHEET 128R1 OF

FILE => I:\bb\04-012001\sas\contract plans and cco\cco\cco#21\aetsp06.dgn

USERNAME => ptom DATE PLOTTED => 23 APR 2007 TIME PLOTTED => 16:16:20

100 % PS&E

4 REVISED PER ADDENDUM NO. 4 DATED DECEMBER 9, 2005

NOTES:

1. Weld of the longitudinal stiffener to the tower shaft skin plates beyond the length indicated shall be in accordance with Table I in "Tower Splice Details No.2" sheet.
2. Perimeter of exterior splice plates shall be caulked.
3. Longitudinal stiffener splice plates shall be A709M HPS 485W steel.
4. Dimension shall be increased by 25 mm for (E1), (E2), (E3) and (E7) to account for shim plate between skin plate and interior splice plate.
5. For elevation of end of stiffener PL see "Tower Shaft Details No.7" sheet.

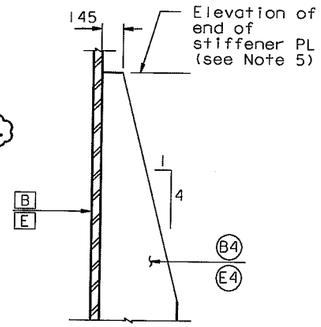

LONGITUDINAL STIFFENERS B4 AND E4
1:20

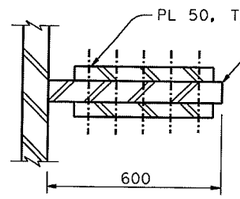

SECTION A-A
1:10

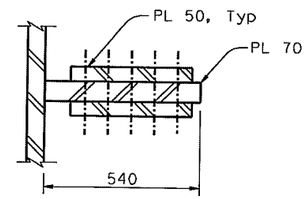

SECTION B-B
1:10

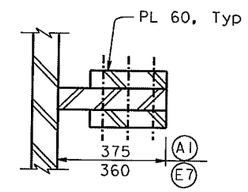

SECTION C-C
1:10

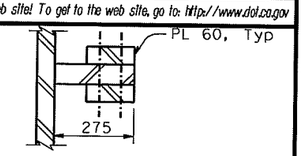

SECTION D-D
1:10

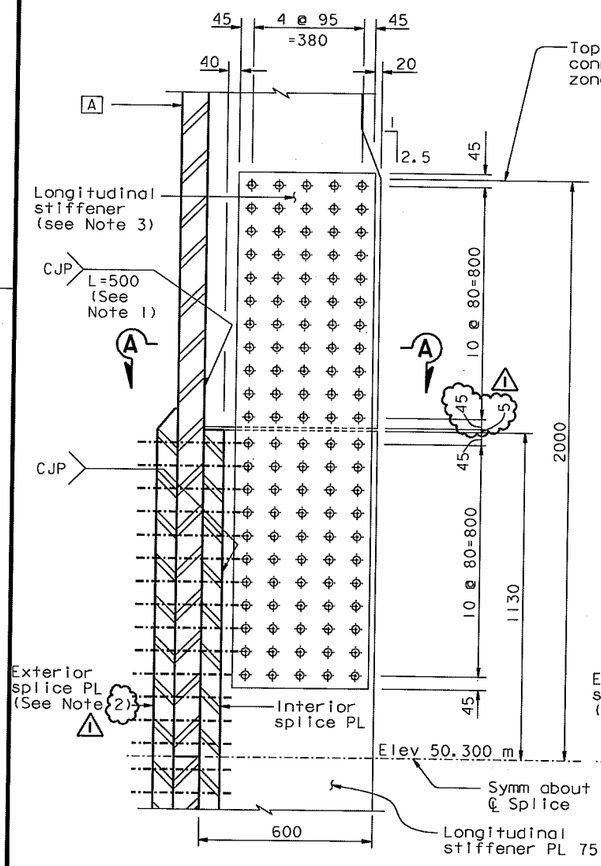

TOWER SKIN PLATE A
(Except A1)

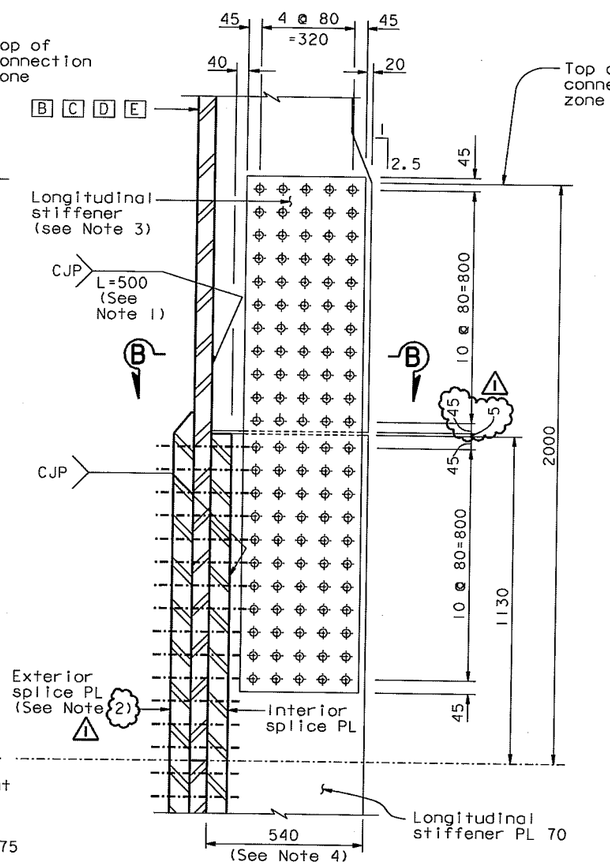

DETAIL F
1:10

TOWER SKIN PLATE B TO E
(Except B4, D4, E4, and E7)

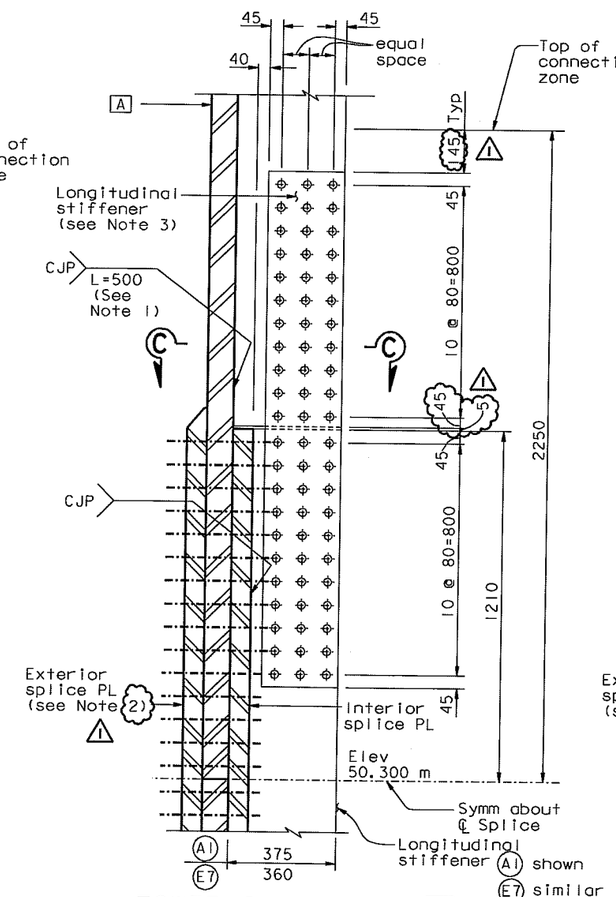

TOWER SKIN PLATE A
(Skin Plate E similar)

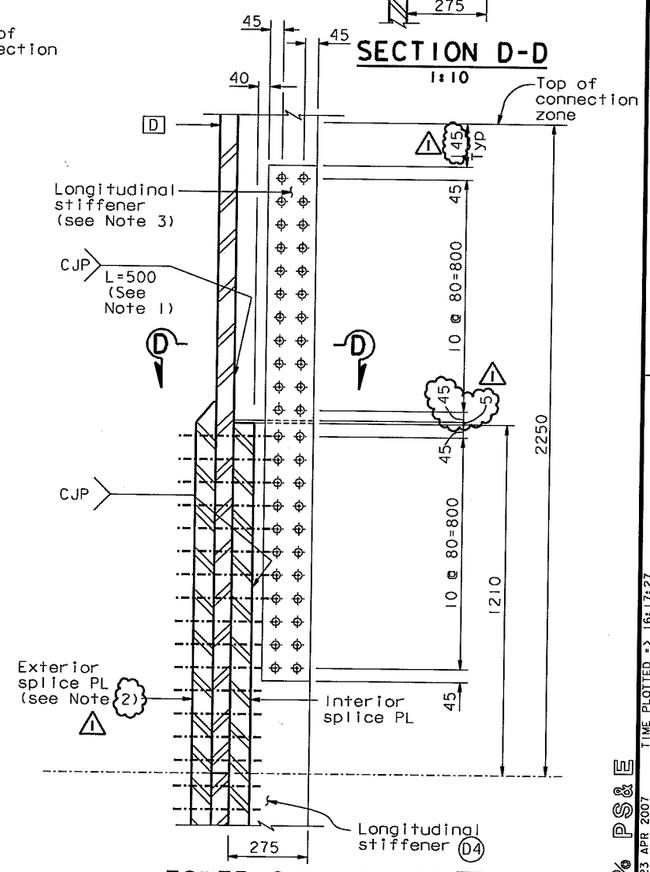

TOWER SKIN PLATE D

DETAIL F (For A1 E7 and D4)
1:10

LEGEND:
M27 A490-X HS Bolt

ALL DIMENSIONS ARE IN MILLIMETERS UNLESS OTHERWISE SHOWN

DIST.	COUNTY	ROUTE	KILOMETER POST TOTAL PROJECT	SHEET NO.	TOTAL SHEETS
04	SF	80	13.2/13.9	546R1	1204

REGISTERED ENGINEER - CIVIL
12-6-04
PLANS APPROVAL DATE
Marwan N. Nader No. C 054426 Exp. 12/31/07 CIVIL STATE OF CALIFORNIA REGISTERED PROFESSIONAL ENGINEER
The State of California or its officers or agents shall not be responsible for the accuracy or completeness of electronic copies of this plan sheet.

T.Y. LIN / MOFFATT & NICHOL
825 BATTERY STREET
SAN FRANCISCO, CA 94111

Caltrans now has a web site! To get to the web site, go to: http://www.dot.ca.gov

R. Valizadeh/V. Toan/Y.L./W.L./F.C.
DESIGN OVERSIGHT
SIGN OFF DATE 06/23/06
Rev. Date: 5-18-98

MARK	DATE	DESCRIPTIONS	BY	CH'D	CCO#
1	06/23/06	LONG STIFFENER GAP & MISC	MN	NV	21

REVISIONS

CONTRACT CHANGE ORDER NO. ____
SHEET ___ OF ___

	BY	CHECKED
DESIGN	M. Nader	M. Gulyas
DETAILS	L. Rus	M. Gulyas
QUANTITIES	L. Rus	Y. Zhang

ORIGINAL SCALE IN MILLIMETERS FOR REDUCED PLANS 0 10 20 30 40 50 60 70 80 90 100

PREPARED FOR THE STATE OF CALIFORNIA DEPARTMENT OF TRANSPORTATION

R. Manzanarez
PROJECT ENGINEER

CU 04
EA 0120F1

BRIDGE NO. 34-0006L/R
KILOMETER POST 13.2/13.9

SAN FRANCISCO OAKLAND BAY BRIDGE
EAST SPAN SEISMIC SAFETY PROJECT
SELF-ANCHORED SUSPENSION BRIDGE
(SUPERSTRUCTURE & TOWER)

TOWER SPLICE DETAILS NO. 7

DISREGARD PRINTS BEARING EARLIER REVISION DATES
REVISION DATES (PRELIMINARY STAGE ONLY) 05/31/01 04/08/02 01/31/02 12/13/02 06/06/03 11/13/05
SHEET 129R1 OF

FILE => I:\bb\04-012001\sas\contract plans and cco\cco\cco*21\detsp07.dgn

USERNAME => ptom
DATE PLOTTED => 23 APR 2007
TIME PLOTTED => 16:17:27
100 % PS&E

MARK	DATE	DESCRIPTIONS	BY	CH'D	CCO#
1	06/23/06	SPLICE PLATES PER ISM	MN	NV	21

REVISIONS

CONTRACT CHANGE ORDER NO. ____
SHEET ___ OF ___

4

Caltrans Metric

DIST.	COUNTY	ROUTE	KILOMETER POST TOTAL PROJECT	SHEET NO.	TOTAL SHEETS
04	SF	80	13.2/13.9	547R1	1204

REGISTERED ENGINEER - CIVIL

12-6-04
PLANS APPROVAL DATE

REGISTERED PROFESSIONAL ENGINEER Morwan N. Nader No. C 054426 Exp. 12/31/07 CIVIL STATE OF CALIFORNIA

The State of California or its officers or agents shall not be responsible for the accuracy or completeness of electronic copies of this plan sheet.

T.Y. LIN / MOFFATT & NICHOL
825 BATTERY STREET
SAN FRANCISCO, CA 94111

Caltrans now has a web site! To get to the web site, go to: http://www.dot.ca.gov

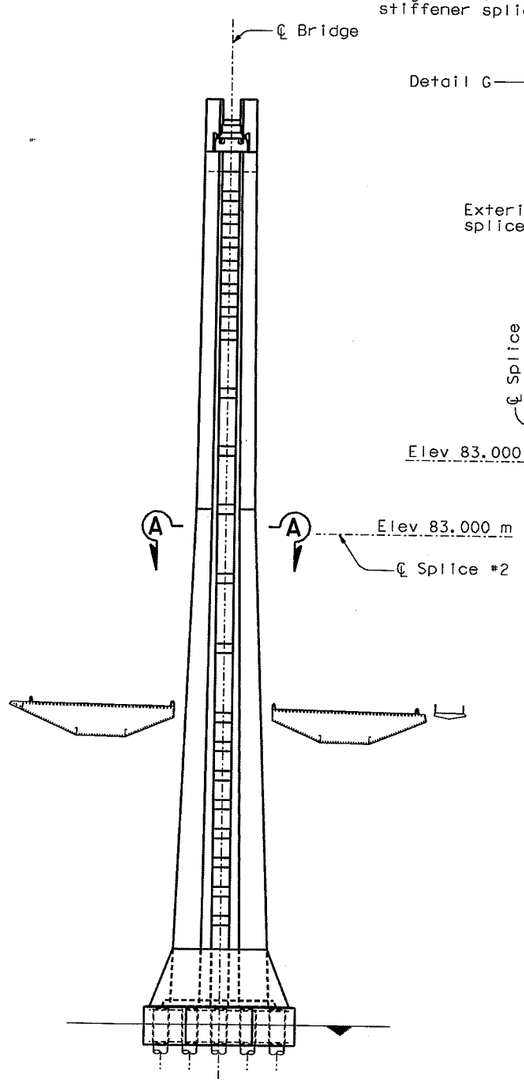

TOWER SPLICE LOCATION
1:500

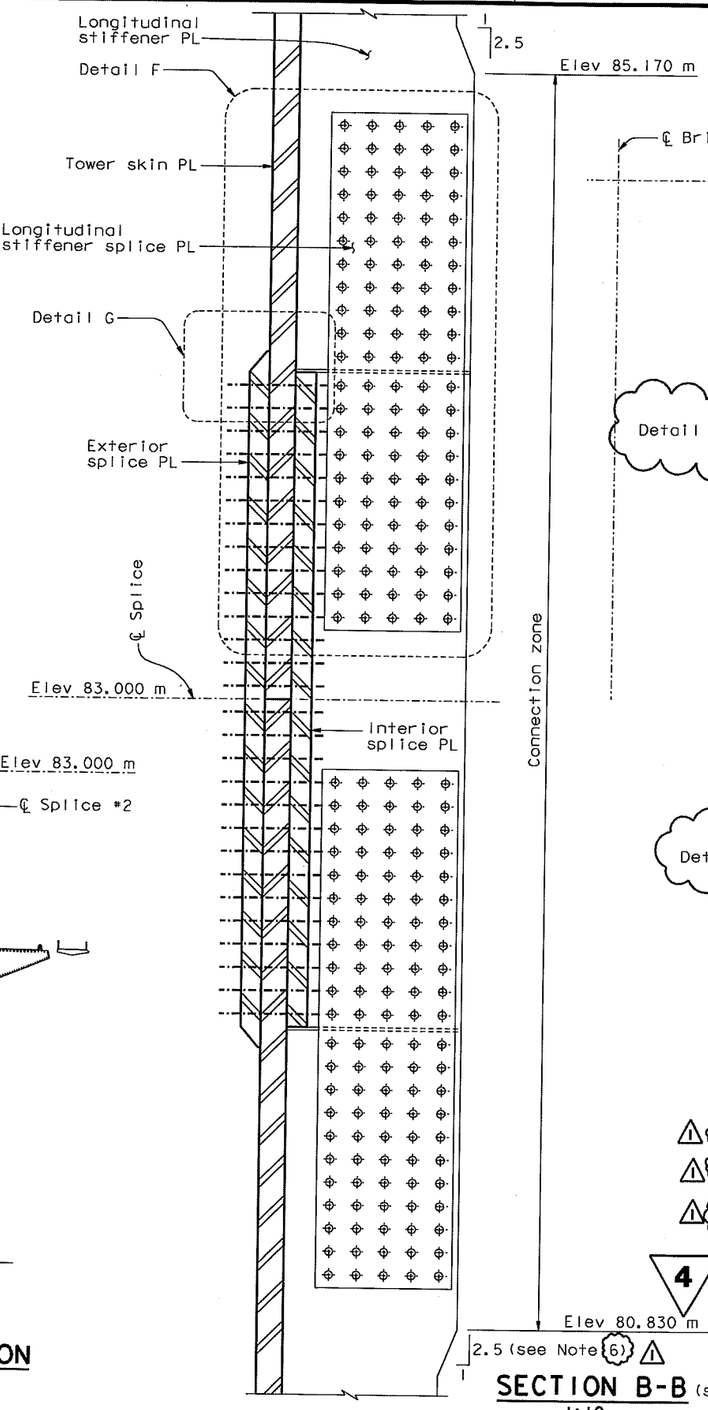

SECTION B-B (see Notes 6 and 7)
1:10

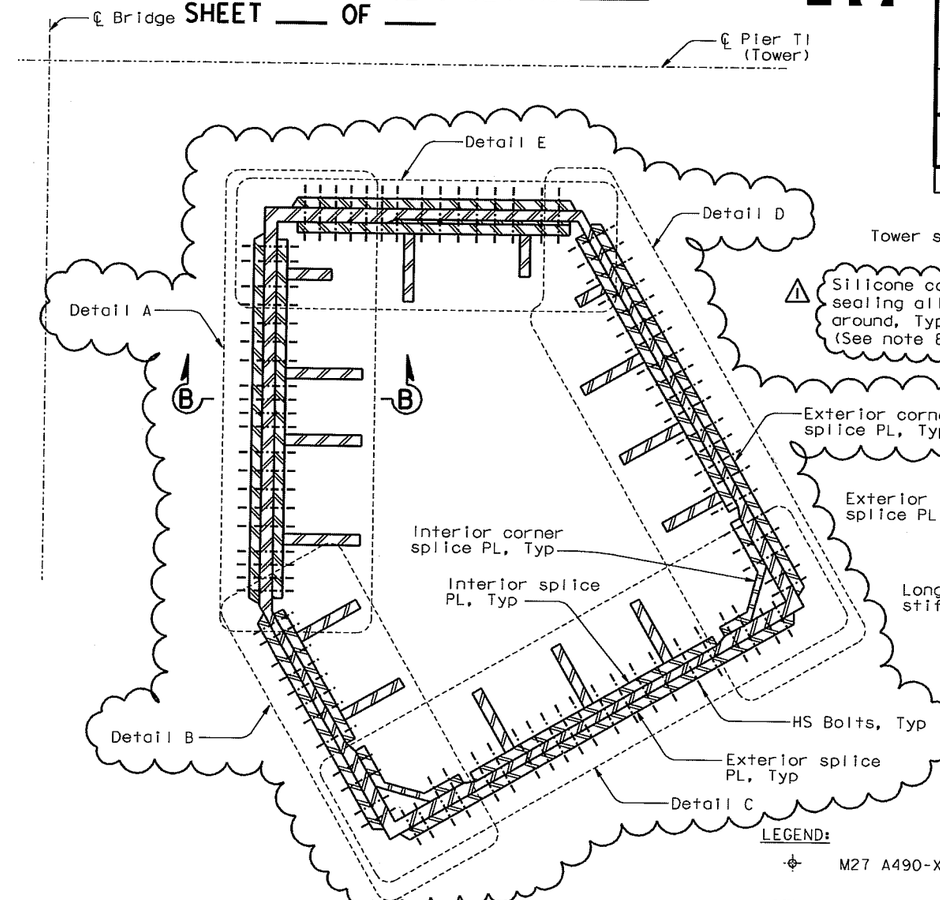

SECTION A-A
1:20

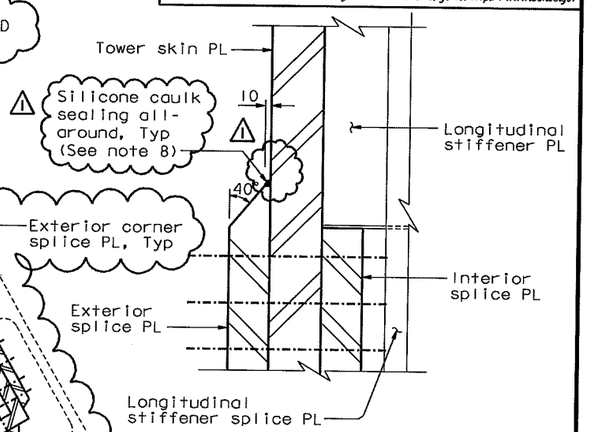

DETAIL G
1:5

LEGEND:

M27 A490-X HS Bolt

NOTES:

1. For Details A and B, see "Tower Splice Details No. 9" sheet.
2. For Detail C, see "Tower Splice Details No. 10" sheet.
3. For Details D and E, see "Tower Splice Details No. 11" sheet.
4. For Detail F, see "Tower Splice Details No. 12" sheet.
5. The tower splice connections are designed as slip critical connections with class B contact surface (slip coefficient 0.5). The Contractor shall ensure that the flatness requirements are met at the faying surfaces.

TYPICAL TOWER SHAFT SPLICE #2

6. Stiffeners A1, E7, and D4 shall not be tapered.
7. For stiffeners A1, E2, E7, and D4, see "Tower Splice Details No. 12" sheet.
8. Silicone caulk sealing shall be applied around the perimeter (horizontal and vertical edges) of all exterior splice plates.

4 **REVISED PER ADDENDUM NO. 4 DATED DECEMBER 9, 2005**

ALL DIMENSIONS ARE IN MILLIMETERS UNLESS OTHERWISE SHOWN

100 % PS&E

DATE PLOTTED => 23 APR 2007 TIME PLOTTED => 16:18:39 USERNAME => ptom

R. Valizadeh/V. Toan/Y.L./W.L./F.C.
DESIGN OVERSIGHT
SIGN OFF DATE 06/23/06
Rev. Date: 5-18-98

	BY	CHECKED
DESIGN	M. Nader	N. Vo
DETAILS	J. Lopez	N. Vo
QUANTITIES	J. Lopez	N. Vo

PREPARED FOR THE STATE OF CALIFORNIA DEPARTMENT OF TRANSPORTATION

R. Manzanarez
PROJECT ENGINEER

BRIDGE NO. 34-0006L/R
KILOMETER POST 13.2/13.9

SAN FRANCISCO OAKLAND BAY BRIDGE
EAST SPAN SEISMIC SAFETY PROJECT
SELF-ANCHORED SUSPENSION BRIDGE (SUPERSTRUCTURE & TOWER)

TOWER SPLICE DETAILS NO. 8

ORIGINAL SCALE IN MILLIMETERS FOR REDUCED PLANS 0 10 20 30 40 50 60 70 80 90 100

CU 04
EA 0120F1

DISREGARD PRINTS BEARING EARLIER REVISION DATES

REVISION DATES (PRELIMINARY STAGE ONLY) 05/31/01 04/08/02 07/01/02 12/13/02 11/13/05

SHEET 130R1 OF

FILE => I:\bb\04-012001\sas\contract plans and cco\cco\cco#21\aetsp08.dgn

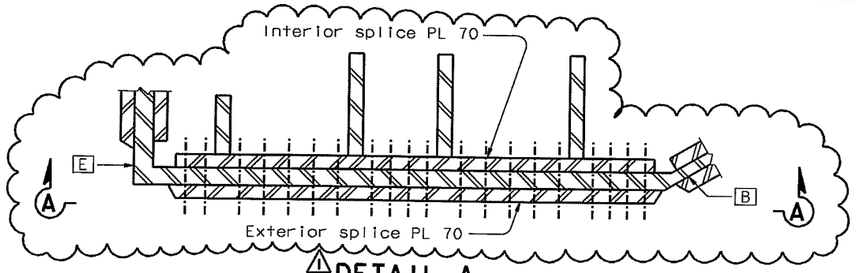

DETAIL A
1:15

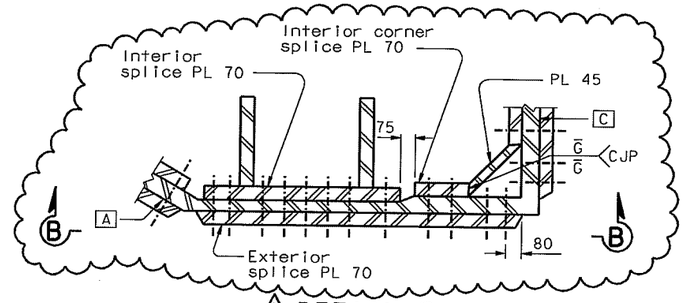

DETAIL B
1:15

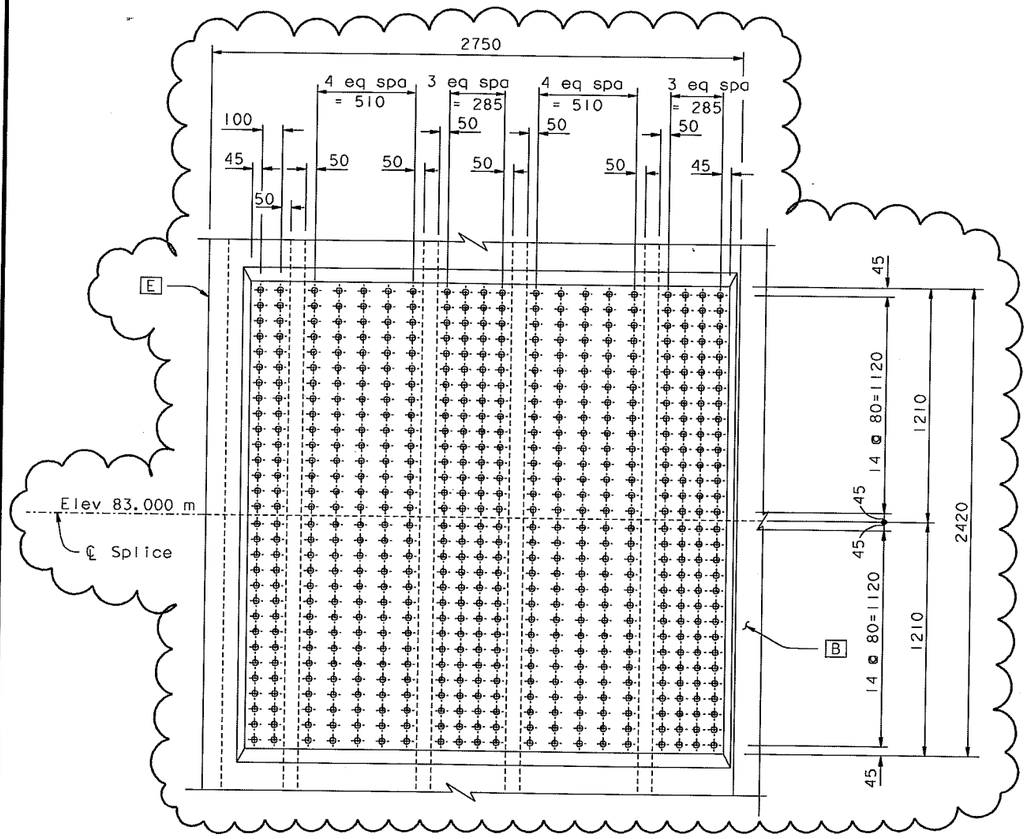

ELEVATION A-A
1:15

TOWER SKIN PLATE A

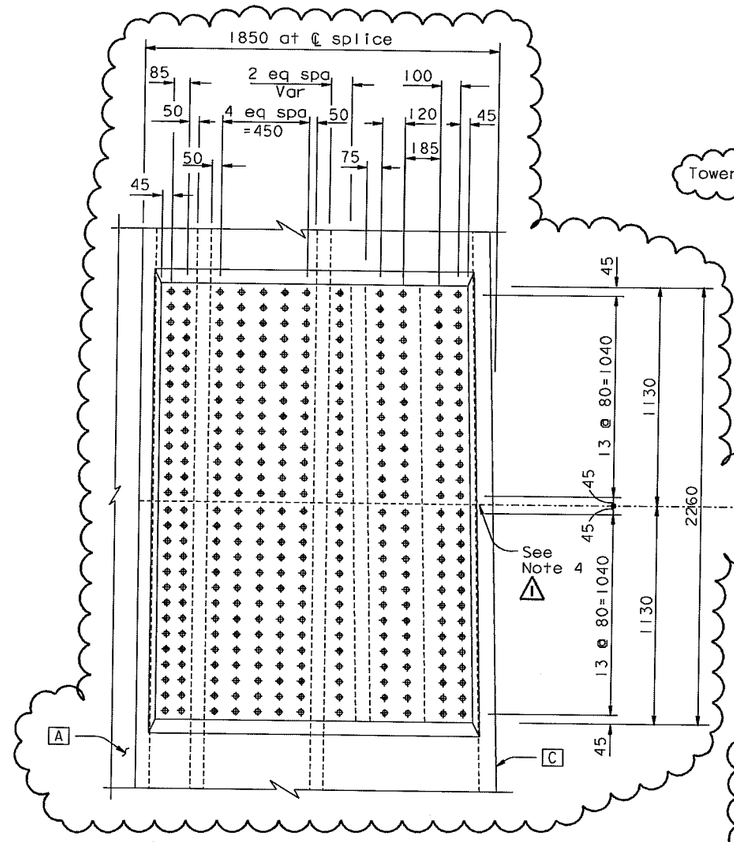

ELEVATION B-B
1:15

TOWER SKIN PLATE B

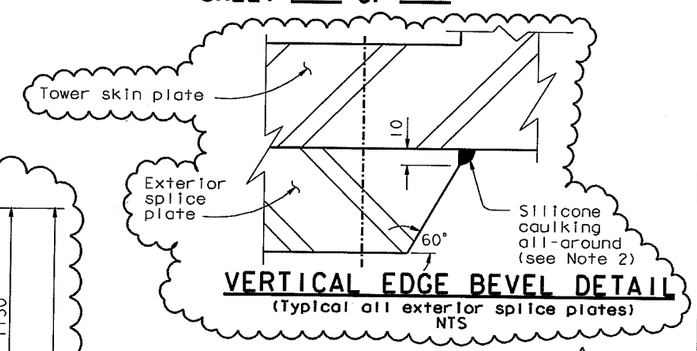

VERTICAL EDGE BEVEL DETAIL
(Typical all exterior splice plates)
NTS

LEGEND:

⊕ M27 A490-X HS Bolts

NOTES:

1. The tower splice connections are designed as slip critical connections with class B contact surface (slip coefficient 0.5). The Contractor shall ensure that the flatness requirements at the faying surfaces and the geometry control are met.
2. Silicone caulk sealing shall be applied around the perimeter (horizontal and vertical edges) of all exterior splice plates.
3. Elevation view of adjacent skin plate not shown for clarity.
4. For skin plate splice seam not covered by exterior splice plates, see details on "Tower Splice Details No. 4" sheet.

4 REVISED PER ADDENDUM NO. 4 DATED DECEMBER 9, 2005

ALL DIMENSIONS ARE IN MILLIMETERS UNLESS OTHERWISE SHOWN

DIST.	COUNTY	ROUTE	KILOMETER POST TOTAL PROJECT	SHEET NO.	TOTAL SHEETS
04	SF	80	13.2/13.9	548R1	1204

Caltrans Metric

REGISTERED ENGINEER - CIVIL

12-6-04
PLANS APPROVAL DATE

REGISTERED PROFESSIONAL ENGINEER Marwan N. Nader No. C 054426 Exp. 12/31/07 CIVIL STATE OF CALIFORNIA

The State of California or its officers or agents shall not be responsible for the accuracy or completeness of electronic copies of this plan sheet.

T.Y. LIN / MOFFATT & NICHOL
825 BATTERY STREET
SAN FRANCISCO, CA 94111

Caltrans now has a web site! To get to the web site, go to: http://www.dot.ca.gov

MARK	DATE	DESCRIPTIONS	BY	CH'D	CCO#
1	06/23/06	SPLICE PLATES PER ISM	MN	NV	21

REVISIONS

CONTRACT CHANGE ORDER NO. ____
SHEET ___ OF ___

R. Valizadeh/V. Toan/Y.L./W.L./F.C.
DESIGN OVERSIGHT
SIGN OFF DATE 06/23/06
Rev. Date: 5-18-98

	BY	CHECKED
DESIGN	M. Nader	N. Vo
DETAILS	C. Choi	N. Vo
QUANTITIES	C. Choi	N. Vo

PREPARED FOR THE STATE OF CALIFORNIA DEPARTMENT OF TRANSPORTATION

R. Manzanarez
PROJECT ENGINEER

BRIDGE NO. 34-0006L/R
KILOMETER POST 13.2/13.9

SAN FRANCISCO OAKLAND BAY BRIDGE
EAST SPAN SEISMIC SAFETY PROJECT
SELF-ANCHORED SUSPENSION BRIDGE
(SUPERSTRUCTURE & TOWER)

TOWER SPLICE DETAILS NO. 9

ORIGINAL SCALE IN MILLIMETERS FOR REDUCED PLANS 0 10 20 30 40 50 60 70 80 90 100

CU 04
EA 0120F1

DISREGARD PRINTS BEARING EARLIER REVISION DATES

REVISION DATES (PRELIMINARY STAGE ONLY) 08/02/99 05/31/01 04/08/02 07/01/02 12/19/02 11/13/05

SHEET 131R1 OF

FILE => I:\bb\04-012001\sas\contract plans and cco\cco\cco#21\aetsp09.dgn

USERNAME => ptom DATE PLOTTED => 23 APR 2007 TIME PLOTTED => 16:19:41

100 % PS&E

DIST.	COUNTY	ROUTE	KILOMETER POST TOTAL PROJECT	SHEET NO.	TOTAL SHEETS
04	SF	80	13.2/13.9	549R1	1204

REGISTERED ENGINEER - CIVIL

12-6-04
PLANS APPROVAL DATE

REGISTERED PROFESSIONAL ENGINEER
Marwan N. Nader
No. C 054426
Exp. 12/31/07
CIVIL
STATE OF CALIFORNIA

The State of California or its officers or agents shall not be responsible for the accuracy or completeness of electronic copies of this plan sheet.

T.Y. LIN / MOFFATT & NICHOL
825 BATTERY STREET
SAN FRANCISCO, CA 94111

Caltrans now has a web site! To get to the web site, go to: http://www.dot.ca.gov

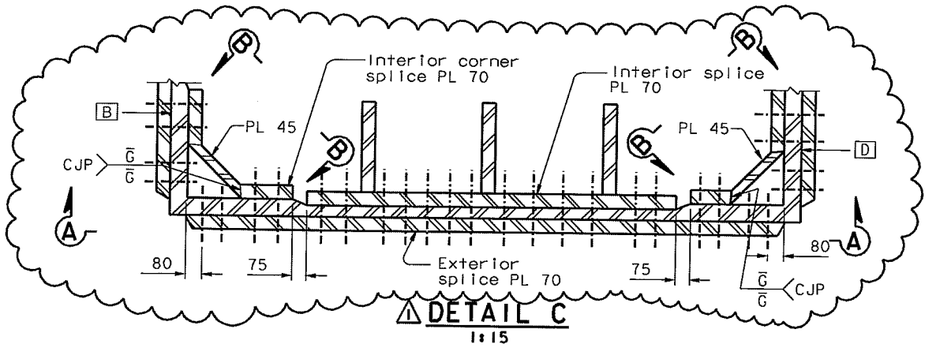

⚠1 DETAIL C
1:15

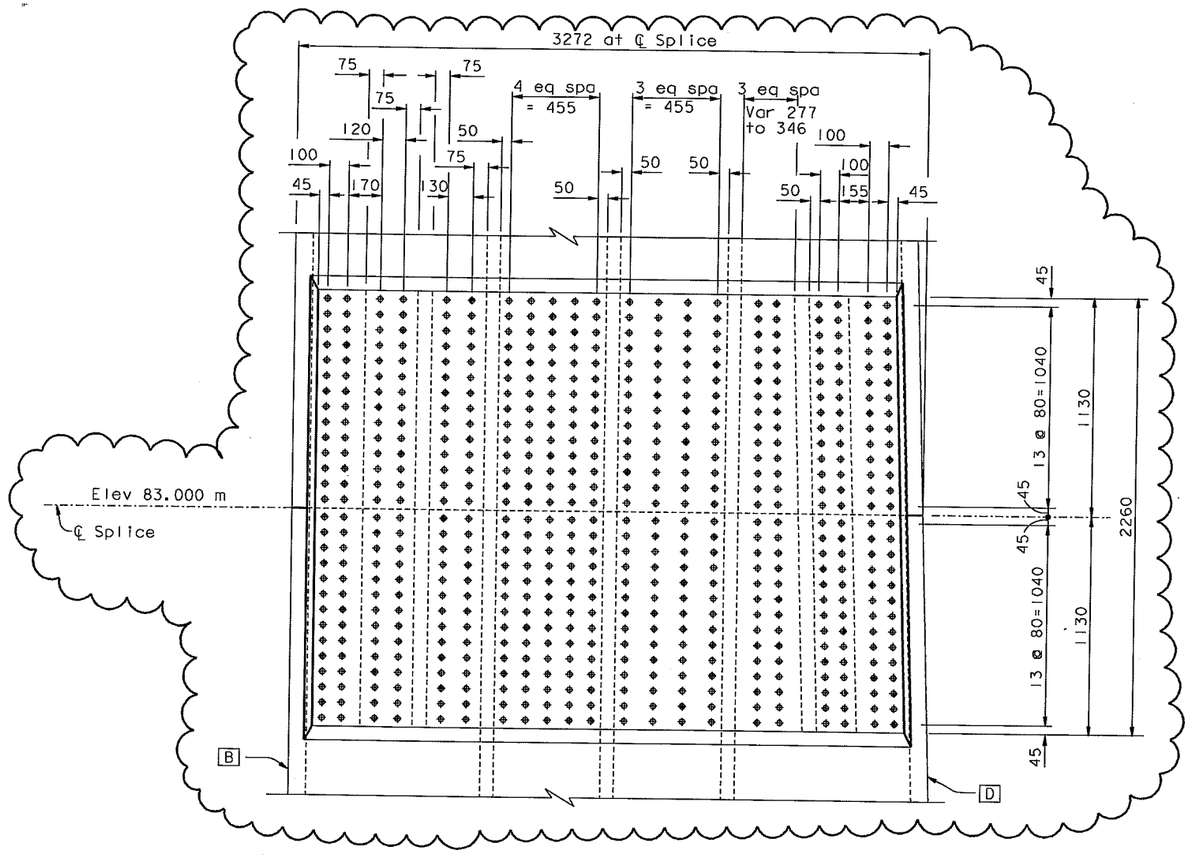

⚠1 ELEVATION A-A
1:15

TOWER SKIN PLATE C

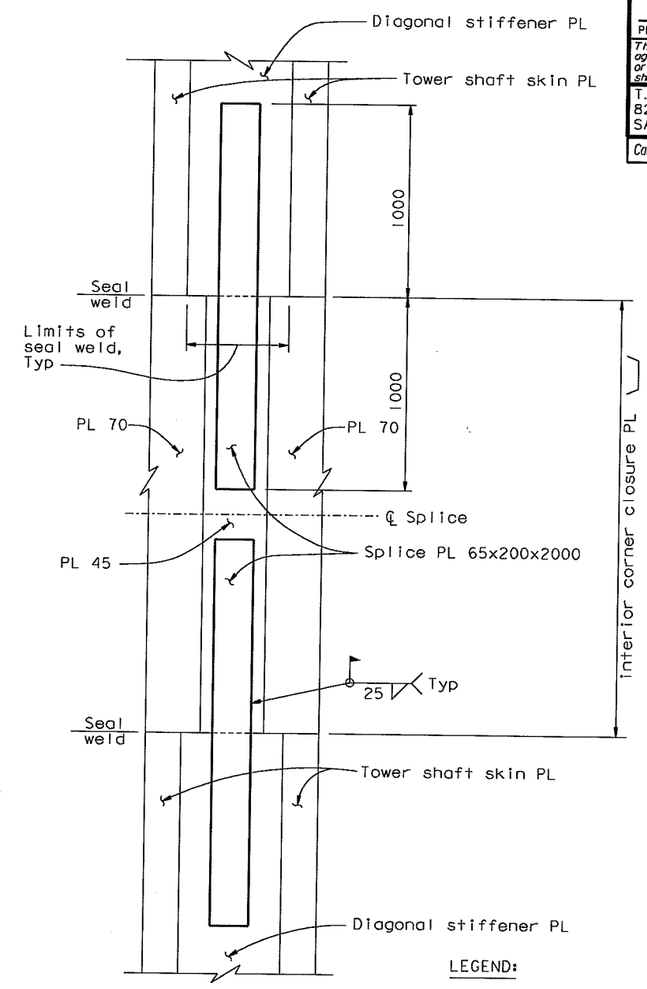

ELEVATION B-B
1:15

LEGEND:

⊕ M27 A490-X HS Bolts

⚠1 NOTES:

1. The tower splice connections are designed as slip critical connections with class B contact surface (slip coefficient 0.5). The Contractor shall ensure that the flatness requirements at the faying surfaces and the geometry control are met.
2. Elevation view of adjacent skin plate not shown for clarity.

MARK	DATE	DESCRIPTIONS	BY	CH'D	CCO#
⚠1	06/23/06	SPLICE PLATES PER ISM	MN	NV	21

REVISIONS

CONTRACT CHANGE ORDER NO. ____
SHEET ____ OF ____

ALL DIMENSIONS ARE IN MILLIMETERS UNLESS OTHERWISE SHOWN

R. Valizadeh/V. Toan/Y.L./W.L./F.C.
DESIGN OVERSIGHT
Reza Valizadeh / Vong Toan / Y. Liu
SIGN OFF DATE 06/23/06
Rev. Date: 5-18-98

DESIGN	BY M. Nader	CHECKED	N. Vo
DETAILS	BY C. Choi	CHECKED	N. Vo
QUANTITIES	BY C. Choi	CHECKED	N. Vo

PREPARED FOR THE STATE OF CALIFORNIA DEPARTMENT OF TRANSPORTATION

R. Manzanarez
PROJECT ENGINEER

BRIDGE NO. 34-0006L/R
KILOMETER POST 13.2/13.9

SAN FRANCISCO OAKLAND BAY BRIDGE
EAST SPAN SEISMIC SAFETY PROJECT
SELF-ANCHORED SUSPENSION BRIDGE
(SUPERSTRUCTURE & TOWER)

TOWER SPLICE DETAILS NO. 10

ORIGINAL SCALE IN MILLIMETERS FOR REDUCED PLANS 0 10 20 30 40 50 60 70 80 90 100

CU 04
EA 0120F1

DISREGARD PRINTS BEARING EARLIER REVISION DATES

REVISION DATES (PRELIMINARY STAGE ONLY) 08/02/99 05/31/01 04/08/02 07/01/02 12/19/02

SHEET 132R1 OF

FILE => I:\bb\04-012001\sas\contract plans and cco\cco\cco#21\aetsp10.dgn

100 % PS&E

USERNAME => ptom DATE PLOTTED => 23 APR 2007 TIME PLOTTED => 16:21:01

DIST.	COUNTY	ROUTE	KILOMETER POST TOTAL PROJECT	SHEET NO.	TOTAL SHEETS
04	SF	80	13.2/13.9	550R1	1204

REGISTERED ENGINEER - CIVIL

12-6-04
PLANS APPROVAL DATE

REGISTERED PROFESSIONAL ENGINEER Marwan N. Nader No. C 054426 Exp. 12/31/07 CIVIL STATE OF CALIFORNIA

The State of California or its officers or agents shall not be responsible for the accuracy or completeness of electronic copies of this plan sheet.

T.Y. LIN / MOFFATT & NICHOL
825 BATTERY STREET
SAN FRANCISCO, CA 94111

Caltrans now has a web site! To get to the web site, go to: http://www.dot.ca.gov

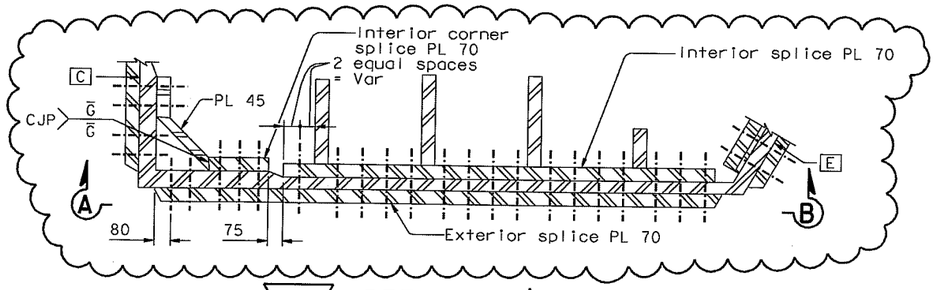

4 DETAIL D ⚠1
1:15

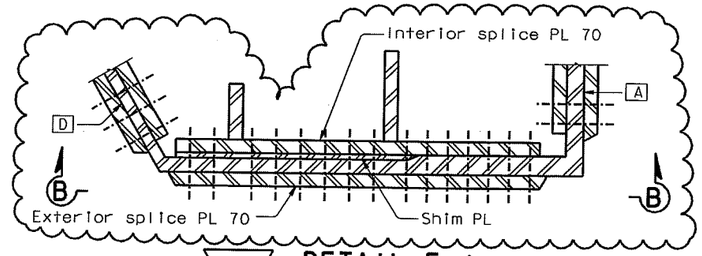

4 DETAIL E ⚠1
1:15

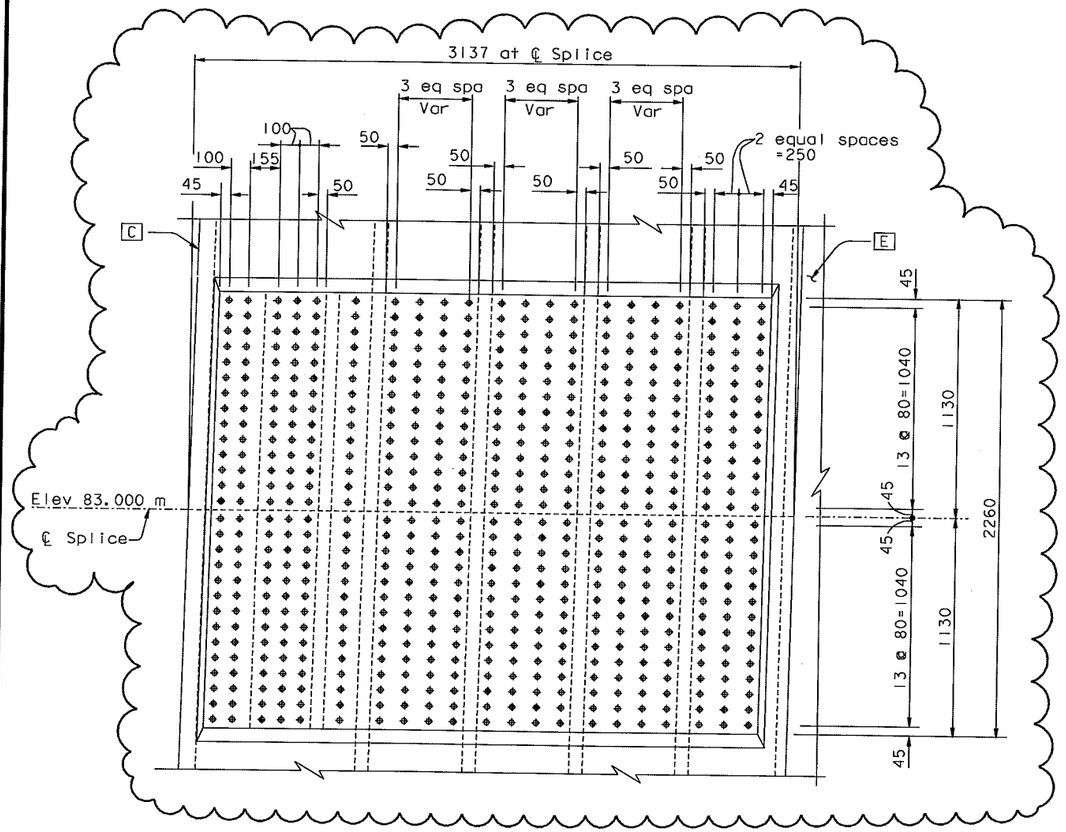

⚠1 ELEVATION A-A
1:15

TOWER SKIN PLATE D

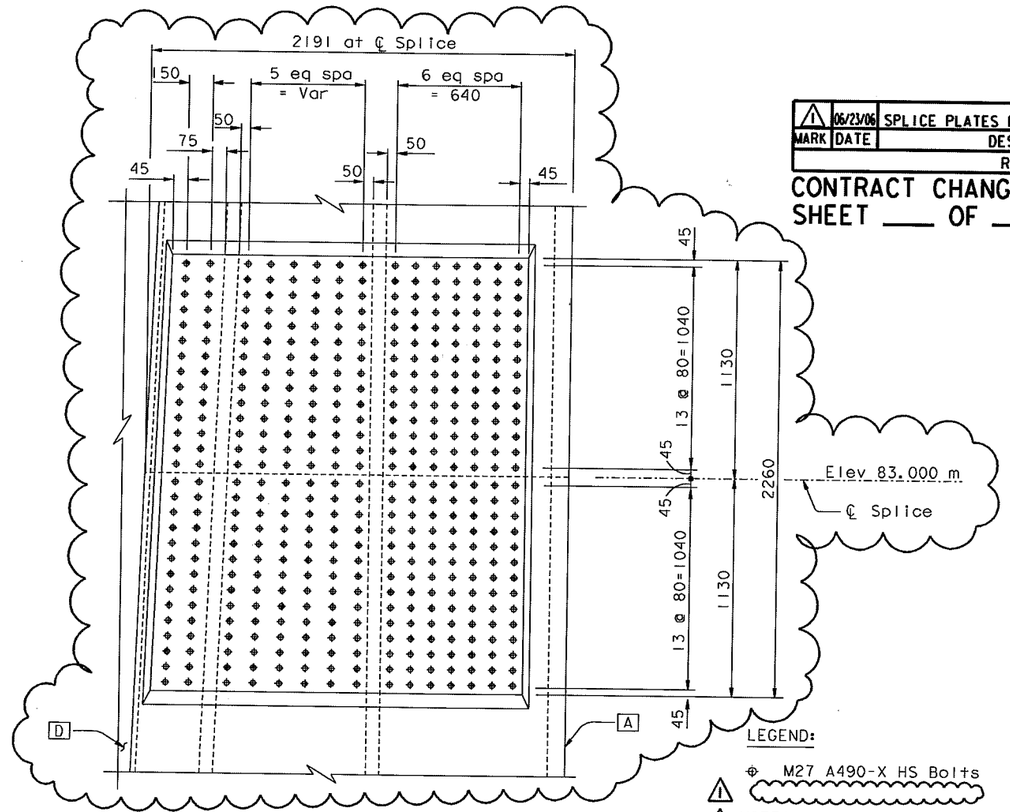

4 ⚠1 ELEVATION B-B
1:15

TOWER SKIN PLATE E

⚠1	06/23/06	SPLICE PLATES PER ISM	MN	NV	21
MARK	DATE	DESCRIPTIONS	BY	CH'D	CCO#
		REVISIONS			

CONTRACT CHANGE ORDER NO. ____
SHEET ___ OF ___

LEGEND:

⊕ M27 A490-X HS Bolts

⚠1 NOTES:

1. The tower splice connections are designed as slip critical connections with class B contact surface (slip coefficient 0.5). The Contractor shall ensure that the flatness requirements at the faying surfaces and the geometry control are met.
2. Elevation view of adjacent skin plate not shown for clarity.

4 REVISED PER ADDENDUM NO. 4 DATED DECEMBER 9, 2005

ALL DIMENSIONS ARE IN MILLIMETERS UNLESS OTHERWISE SHOWN

R. Vaziadeh/V. Toan/Y.L./W.L./F.C.
DESIGN OVERSIGHT
SIGN OFF DATE 06/23/06

	BY	CHECKED
DESIGN	M. Nader	N. Vo
DETAILS	C. Choi	N. Vo
QUANTITIES	C. Choi	N. Vo

PREPARED FOR THE STATE OF CALIFORNIA DEPARTMENT OF TRANSPORTATION

R. Manzanarez
PROJECT ENGINEER

BRIDGE NO. 34-0006L/R
KILOMETER POST 13.2/13.9

SAN FRANCISCO OAKLAND BAY BRIDGE
EAST SPAN SEISMIC SAFETY PROJECT
SELF-ANCHORED SUSPENSION BRIDGE
(SUPERSTRUCTURE & TOWER)

TOWER SPLICE DETAILS NO. 11

Rev. Date: 5-18-98

ORIGINAL SCALE IN MILLIMETERS FOR REDUCED PLANS 0 10 20 30 40 50 60 70 80 90 100

CU 04
EA 0120F1

DISREGARD PRINTS BEARING EARLIER REVISION DATES → 08/30/99 05/31/01 01/04/02 07/01/02 12/19/02 11/13/05

SHEET 133R1 OF

FILE => I:\bb\04-012001\sas\contract plans and cco\cco\cco*21\detspl1.dgn

USERNAME => ptom DATE PLOTTED => 23 APR 2007 TIME PLOTTED => 16:22:11

100 % PS&E

DIST	COUNTY	ROUTE	KILOMETER POST TOTAL PROJECT	SHEET NO.	TOTAL SHEETS
04	SF	80	13.2/13.9	551R1	1204

REGISTERED ENGINEER - CIVIL
12-6-04
PLANS APPROVAL DATE

REGISTERED PROFESSIONAL ENGINEER Marwan N. Nader No. C 054426 Exp. 12/31/07 CIVIL STATE OF CALIFORNIA

The State of California or its officers or agents shall not be responsible for the accuracy or completeness of electronic copies of this plan sheet.

T.Y. LIN / MOFFATT & NICHOL
825 BATTERY STREET
SAN FRANCISCO, CA 94111

Caltrans now has a web site! To get to the web site, go to: http://www.dot.ca.gov

4 Caltrans Metric

NOTES:

1. Weld of the longitudinal stiffener to the tower shaft skin plates beyond the length indicated shall be in accordance with Table 1 in "Tower Splice Details No.2" sheet.
2. Perimeter of exterior splice plates shall be caulked. 1
3. Longitudinal stiffener splice plates shall be A709M HPS 485W steel.
4. Dimension shall be increased by 25 mm for (E1) and (E7) to account for shim plate between skin plate and interior splice plate.
5. For elevation of end of stiffener PL see "Tower Shaft Details No.7" sheet.

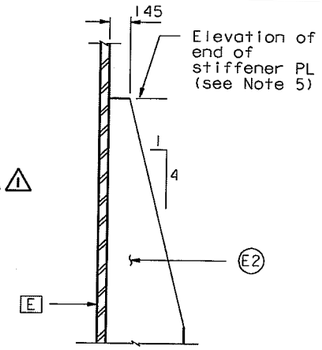

LONGITUDINAL STIFFENER E2
1:20

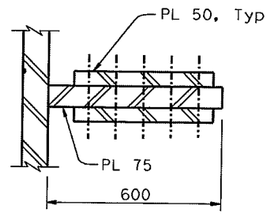

SECTION A-A
1:10

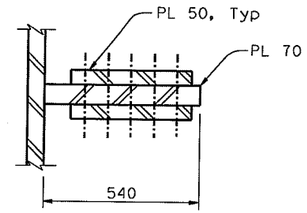

SECTION B-B
1:10

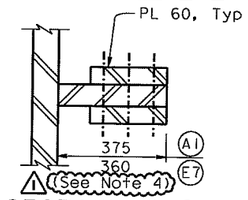

SECTION C-C
1:10

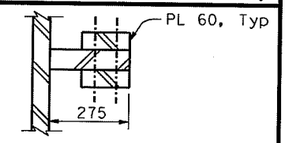

SECTION D-D
1:10

4 REVISED PER ADDENDUM NO. 4 DATED DECEMBER 9, 2005

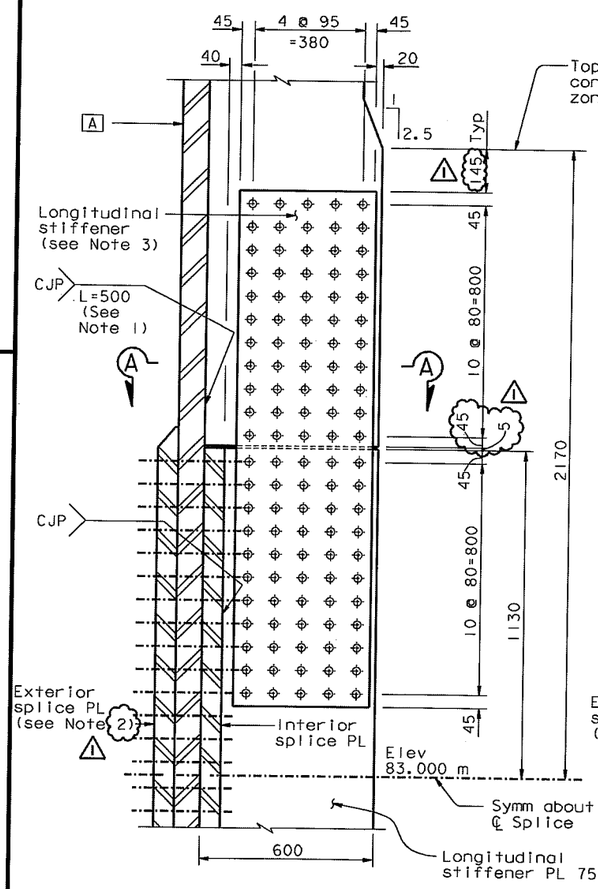

TOWER SKIN PLATE A
(Except (A1))

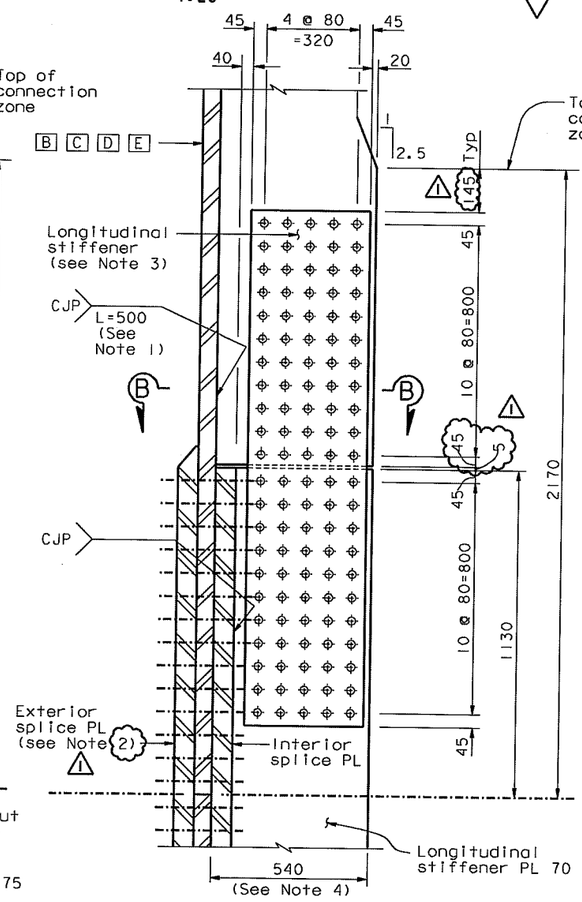

TOWER SKIN PLATES B TO E
(Except (E2), (E7) and (D4))

DETAIL F
1:10

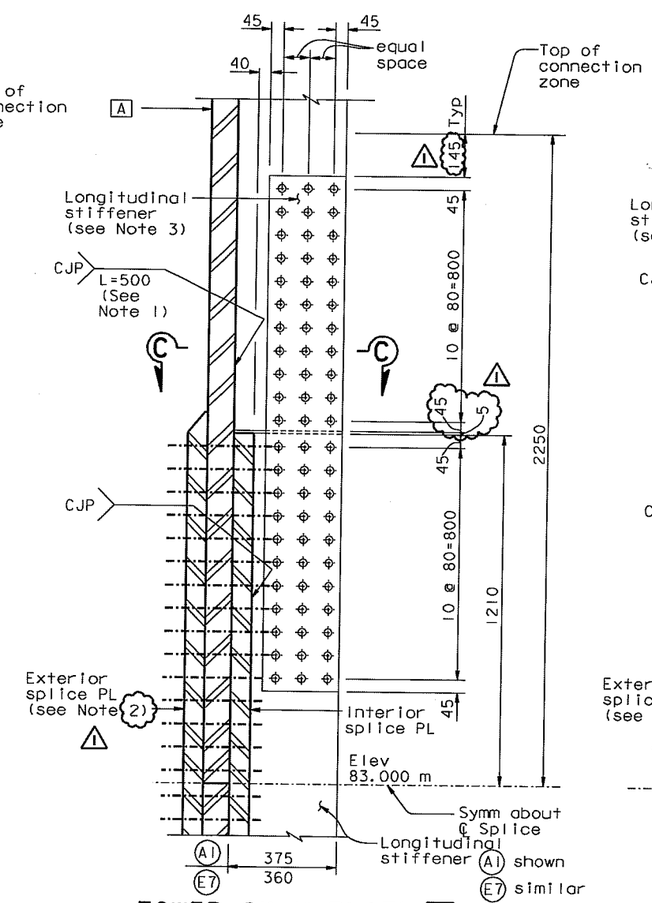

TOWER SKIN PLATE A
(Skin Plate E similar)

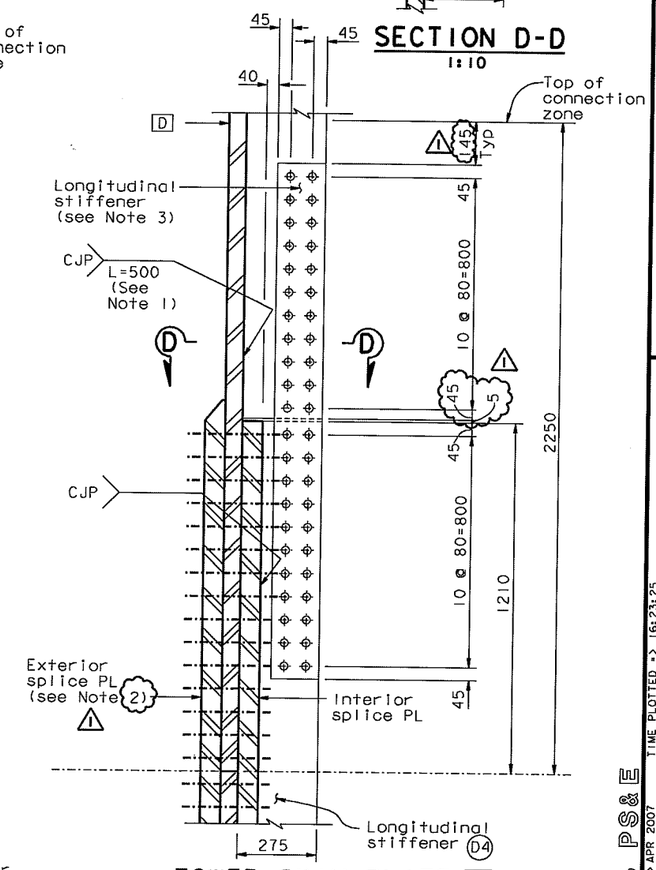

TOWER SKIN PLATE D

DETAIL F (For (A1) (E7) and (D4))
1:10

LEGEND:
M27 A490-X HS Bolt

ALL DIMENSIONS ARE IN MILLIMETERS UNLESS OTHERWISE SHOWN

R. Valizadeh/V. Toan/Y.L./W.L./F.C.
DESIGN OVERSIGHT
SIGN OFF DATE 06/23/06
Rev. Date: 5-18-98

MARK	DATE	DESCRIPTIONS	BY	CH'D	CCO#
1	06/21/06	LONG. STIFFENER GAP & MISC.	MN	NV	21

REVISIONS

CONTRACT CHANGE ORDER NO. ____
SHEET ___ OF ___

	BY	CHECKED
DESIGN	M. Nader	N. Vo
DETAILS	J. Lopez	N. Vo
QUANTITIES	J. Lopez	N. Vo

ORIGINAL SCALE IN MILLIMETERS FOR REDUCED PLANS 0 10 20 30 40 50 60 70 80 90 100

PREPARED FOR THE STATE OF CALIFORNIA DEPARTMENT OF TRANSPORTATION

R. Manzanarez
PROJECT ENGINEER

CU 04
EA 0120F1

BRIDGE NO. 34-0006L/R
KILOMETER POST 13.2/13.9

DISREGARD PRINTS BEARING EARLIER REVISION DATES

SAN FRANCISCO OAKLAND BAY BRIDGE
EAST SPAN SEISMIC SAFETY PROJECT
SELF-ANCHORED SUSPENSION BRIDGE
(SUPERSTRUCTURE & TOWER)

TOWER SPLICE DETAILS NO. 12

REVISION DATES (PRELIMINARY STAGE ONLY) 05/31/01 04/08/02 01/24/02 12/19/02 11/13/05

SHEET 134R1 OF

FILE => I:\bb\04-012001\sas\contract plans and cco\cco\cco#21\detspl2.dgn

100 % PS&E

DATE PLOTTED => 25 APR 2007 TIME PLOTTED => 16:23:25

USERNAME => pfam

DIST.	COUNTY	ROUTE	KILOMETER POST TOTAL PROJECT	SHEET NO.	TOTAL SHEETS
04	SF	80	13.2/13.9	552R1	1204

REGISTERED ENGINEER - CIVIL

12-6-04
PLANS APPROVAL DATE

REGISTERED PROFESSIONAL ENGINEER Morwan N. Nader No. C 054426 Exp. 12/31/07 CIVIL STATE OF CALIFORNIA

The State of California or its officers or agents shall not be responsible for the accuracy or completeness of electronic copies of this plan sheet.

T.Y. LIN / MOFFATT & NICHOL
825 BATTERY STREET
SAN FRANCISCO, CA 94111

Caltrans now has a web site! To get to the web site, go to: http://www.dot.ca.gov

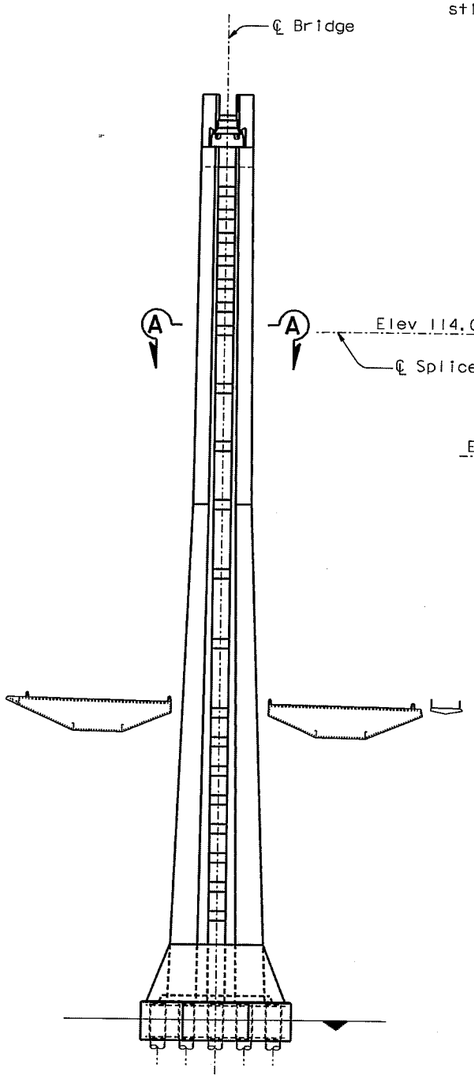

TOWER SPLICE LOCATION
1:500

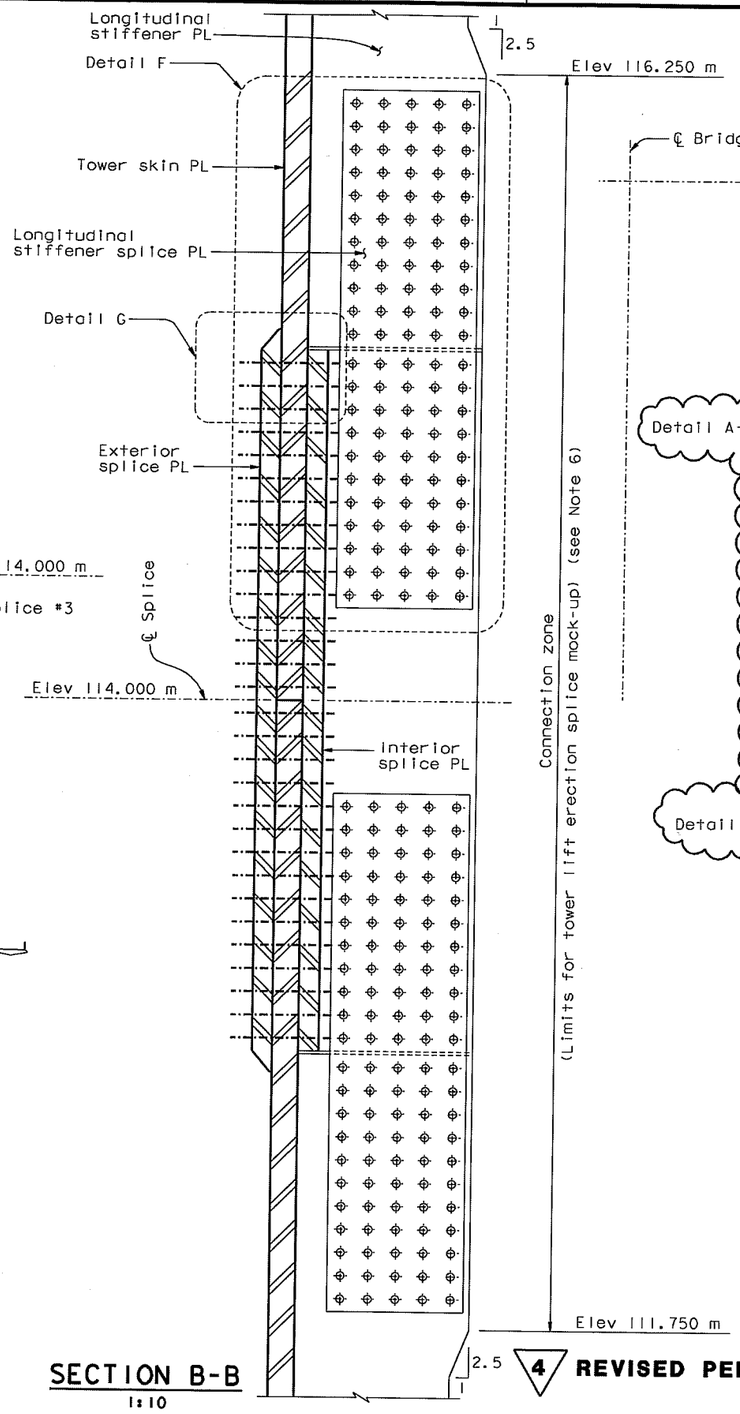

SECTION B-B
1:10

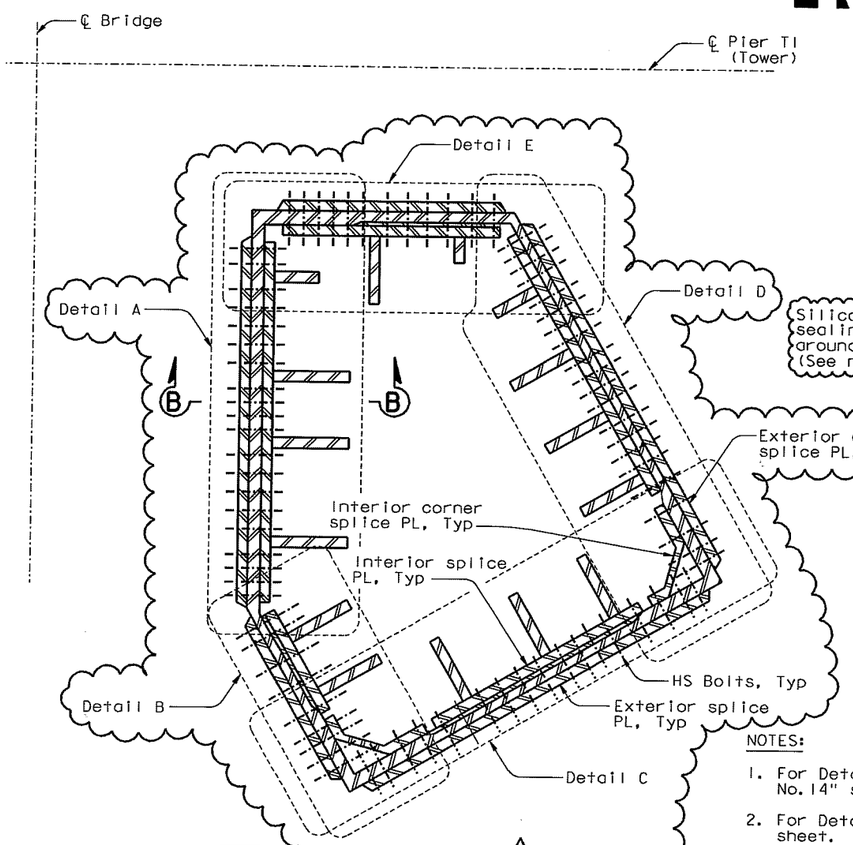

4 SECTION A-A 1
1:20

TYPICAL TOWER SHAFT SPLICE #3
(Limits for mock-up)
(see Note 6)

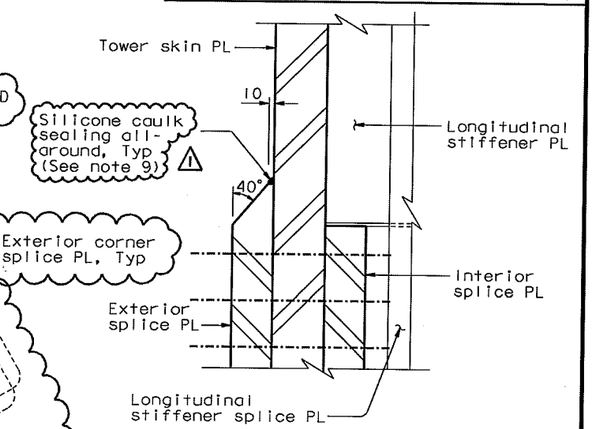

DETAIL G
1:5

NOTES:

1. For Details A and B, see "Tower Splice Details No. 14" sheet.
2. For Detail C, see "Tower Splice Details No. 15" sheet.
3. For Details D and E, see "Tower Splice Details No. 16" sheet.
4. For Detail F, see "Tower Splice Details No. 17" sheet.
5. The tower splice connections are designed as slip critical connections with class B contact surface (slip coefficient 0.5). The Contractor shall ensure that the flatness requirements are met at the faying surfaces.
6. Mock-up for tower lift erection splice shall be made for one shaft only. Limits shown apply to either all bolted, combined bolted and welded, or all welded splice.
7. Stiffeners A1, E7, and D4 shall not be tapered.
8. For stiffeners A1, E7, and D4 see "Tower Splice Details No. 17" sheet. 4 1
9. Silicone caulk sealing shall be applied around the perimeter (horizontal and vertical edges) of all exterior splice plates. 1

MARK	DATE	DESCRIPTIONS	BY	CH'D	CCO#
1	06/23/06	SPLICE PLATES PER ISM	MN	NV	21

REVISIONS

CONTRACT CHANGE ORDER NO. ____
SHEET ____ OF ____

LEGEND:
M27 A490-X HS Bolt

4 REVISED PER ADDENDUM NO. 4 DATED DECEMBER 9, 2005

ALL DIMENSIONS ARE IN MILLIMETERS UNLESS OTHERWISE SHOWN

R. Valizadeh/V. Toan/Y.L./W.L./F.C.
DESIGN OVERSIGHT
Reza Valizadeh / Vong Toan / Y. Liu
SIGN OFF DATE 06/23/06
Rev. Date: 5-18-98

	BY	CHECKED
DESIGN	M. Nader	N. Vo
DETAILS	J. Lopez	N. Vo
QUANTITIES	J. Lopez	N. Vo

PREPARED FOR THE STATE OF CALIFORNIA DEPARTMENT OF TRANSPORTATION

R. Manzanarez
PROJECT ENGINEER

BRIDGE NO. 34-0006L/R
KILOMETER POST 13.2/13.9

SAN FRANCISCO OAKLAND BAY BRIDGE
EAST SPAN SEISMIC SAFETY PROJECT
SELF-ANCHORED SUSPENSION BRIDGE
(SUPERSTRUCTURE & TOWER)

TOWER SPLICE DETAILS NO. 13

ORIGINAL SCALE IN MILLIMETERS FOR REDUCED PLANS 0 10 20 30 40 50 60 70 80 90 100

CU 04
EA 0120F1

DISREGARD PRINTS BEARING EARLIER REVISION DATES

REVISION DATES (PRELIMINARY STAGE ONLY) 05/31/01 04/08/02 07/01/02 12/19/02 11/13/05

SHEET 135R1 OF

FILE => I:\bb\04-012001\sas\contract plans and cco\cco\cco=21\aetspl3.dgn

USERNAME => ptom DATE PLOTTED => 23 APR 2007 TIME PLOTTED => 16:24:31

100 % PS&E

DIST.	COUNTY	ROUTE	KILOMETER POST TOTAL PROJECT	SHEET NO.	TOTAL SHEETS
04	SF	80	13.2/13.9	553R1	1204

REGISTERED ENGINEER - CIVIL

12-6-04
PLANS APPROVAL DATE

REGISTERED PROFESSIONAL ENGINEER Marwan N. Nader No. C 054426 Exp. 12/31/07 CIVIL STATE OF CALIFORNIA

The State of California or its officers or agents shall not be responsible for the accuracy or completeness of electronic copies of this plan sheet.

T.Y. LIN / MOFFATT & NICHOL
825 BATTERY STREET
SAN FRANCISCO, CA 94111

Caltrans now has a web site! To get to the web site, go to: http://www.dot.ca.gov

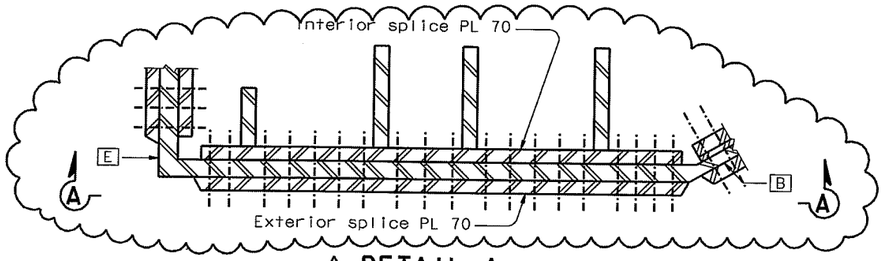

⚠1 DETAIL A
1:15

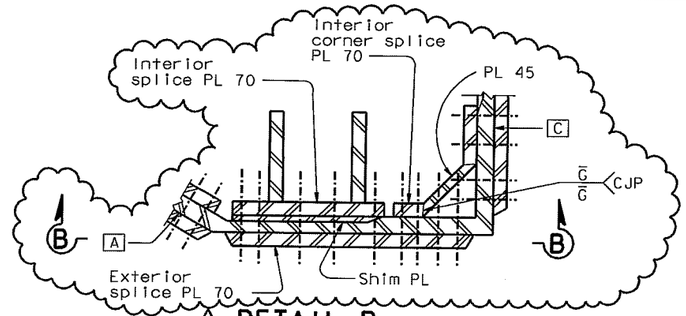

⚠1 DETAIL B
1:15

⚠1	06/23/06	SPLICE PLATES PER ISM	MN	NV	21
MARK	DATE	DESCRIPTIONS	BY	CH'D	CCO#
		REVISIONS			

CONTRACT CHANGE ORDER NO. ____
SHEET ___ OF ___

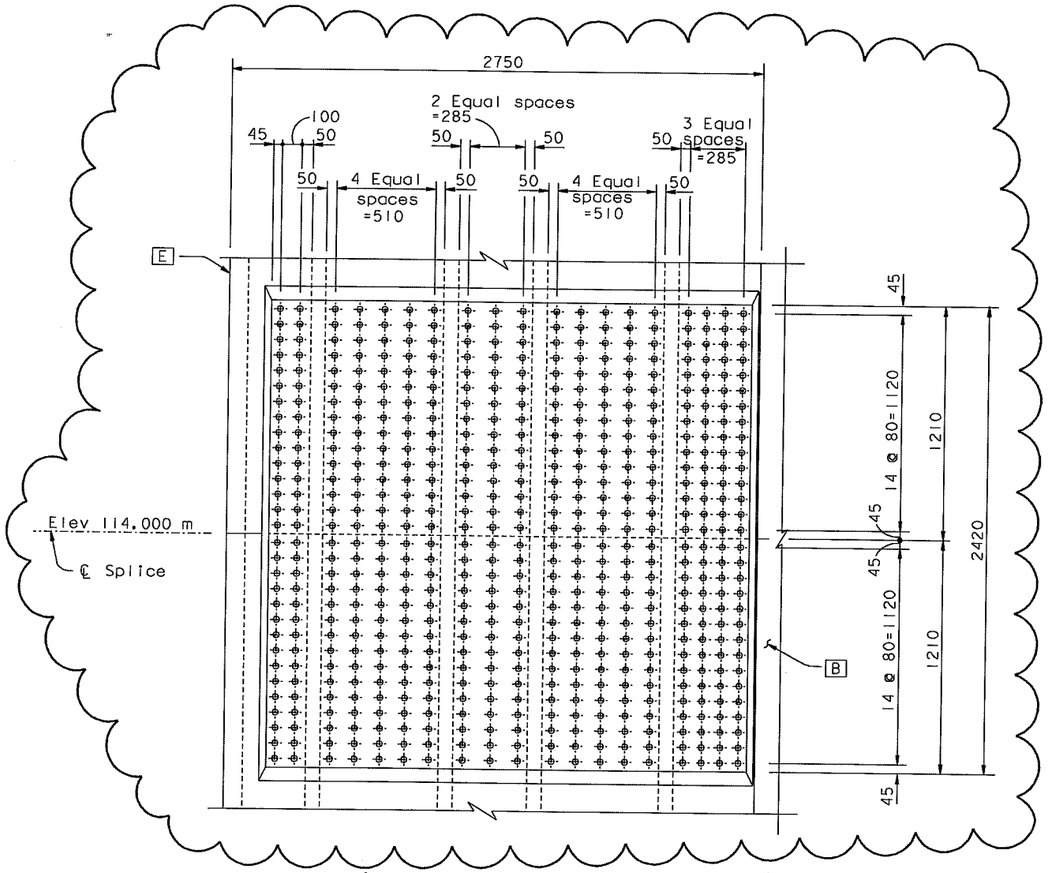

⚠1 ELEVATION A-A
1:15

TOWER SKIN PLATE A

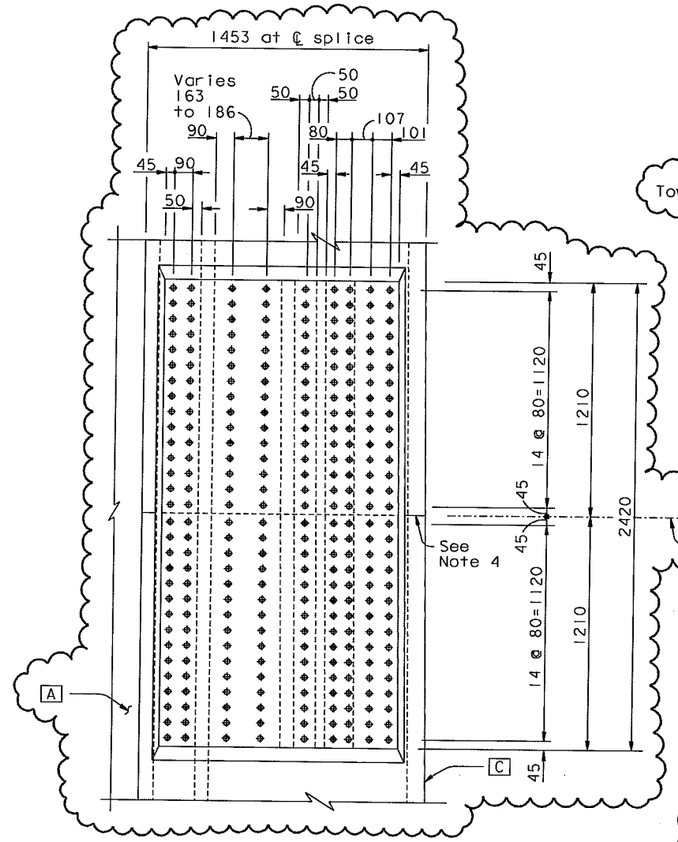

⚠1 ELEVATION B-B
1:15

TOWER SKIN PLATE B

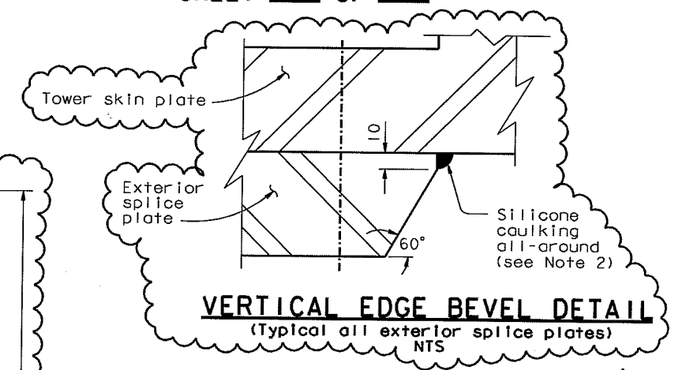

VERTICAL EDGE BEVEL DETAIL
(Typical all exterior splice plates)
NTS

⚠1

Elev 114.000 m
℄ Splice

LEGEND:

⊕ M27 A490-X HS Bolts

⚠1

NOTES: ⚠1

1. The tower splice connections are designed as slip critical connections with class B contact surface (slip coefficient 0.5). The Contractor shall ensure that the flatness requirements at the faying surfaces and the geometry control are met.
2. Silicone caulk sealing shall be applied around the perimeter (horizontal and vertical edges) of all exterior splice plates.
3. Elevation view of adjacent skin plate not shown for clarity.
4. For skin plate splice seam not covered by exterior splice plates, see details on "Tower Splice Details No. 4" sheet.

100 % PS&E

TIME PLOTTED => 16:25:35
DATE PLOTTED => 23 APR 2007
USERNAME => ptom

ALL DIMENSIONS ARE IN MILLIMETERS UNLESS OTHERWISE SHOWN

R. Valizadeh/V. Toan/Y.L./W.L./F.C.
DESIGN OVERSIGHT
SIGN OFF DATE 06/23/06
Rev. Date: 5-18-98

	BY	CHECKED
DESIGN	M. Nader	N. Vo
DETAILS	J. Lopez	N. Vo
QUANTITIES	J. Lopez	N. Vo

PREPARED FOR THE STATE OF CALIFORNIA DEPARTMENT OF TRANSPORTATION

R. Manzanarez
PROJECT ENGINEER

BRIDGE NO. 34-0006L/R
KILOMETER POST 13.2/13.9

CU 04
EA 0120F1

ORIGINAL SCALE IN MILLIMETERS FOR REDUCED PLANS 0 10 20 30 40 50 60 70 80 90 100

DISREGARD PRINTS BEARING EARLIER REVISION DATES

REVISION DATES (PRELIMINARY STAGE ONLY) 08/08/99 05/24/01 04/08/02 01/04/02 12/19/02

SHEET 136R1 OF

SAN FRANCISCO OAKLAND BAY BRIDGE
EAST SPAN SEISMIC SAFETY PROJECT
SELF-ANCHORED SUSPENSION BRIDGE
(SUPERSTRUCTURE & TOWER)

TOWER SPLICE DETAILS NO. 14

FILE => I:\bb\04-012001\sas\contract plans and cco\cco\cco#21\detspl4.dgn

DIST.	COUNTY	ROUTE	KILOMETER POST TOTAL PROJECT	SHEET NO.	TOTAL SHEETS
04	SF	80	13.2/13.9	554R1	1204

REGISTERED ENGINEER - CIVIL

12-6-04
PLANS APPROVAL DATE

REGISTERED PROFESSIONAL ENGINEER Marwan N. Nader No. C 054426 Exp. 12/31/07 CIVIL STATE OF CALIFORNIA

The State of California or its officers or agents shall not be responsible for the accuracy or completeness of electronic copies of this plan sheet.

T.Y. LIN / MOFFATT & NICHOL
825 BATTERY STREET
SAN FRANCISCO, CA 94111

Caltrans now has a web site! To get to the web site, go to: http://www.dot.ca.gov

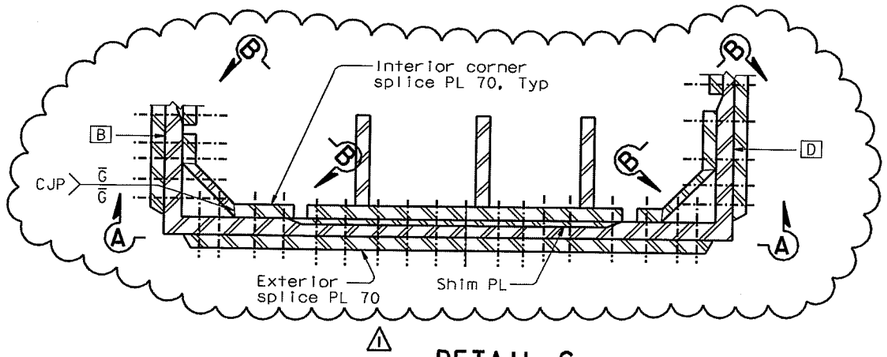

DETAIL C
1:15

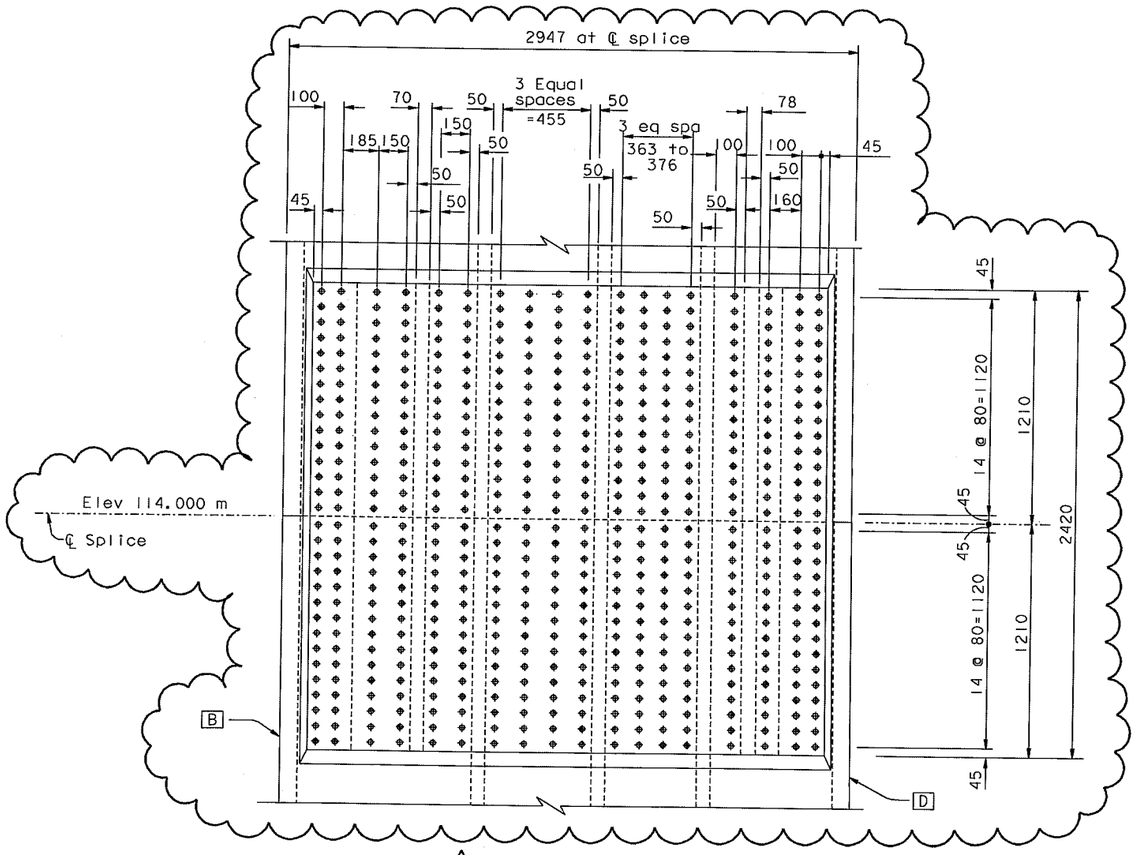

ELEVATION A-A
1:15

TOWER SKIN PLATE C

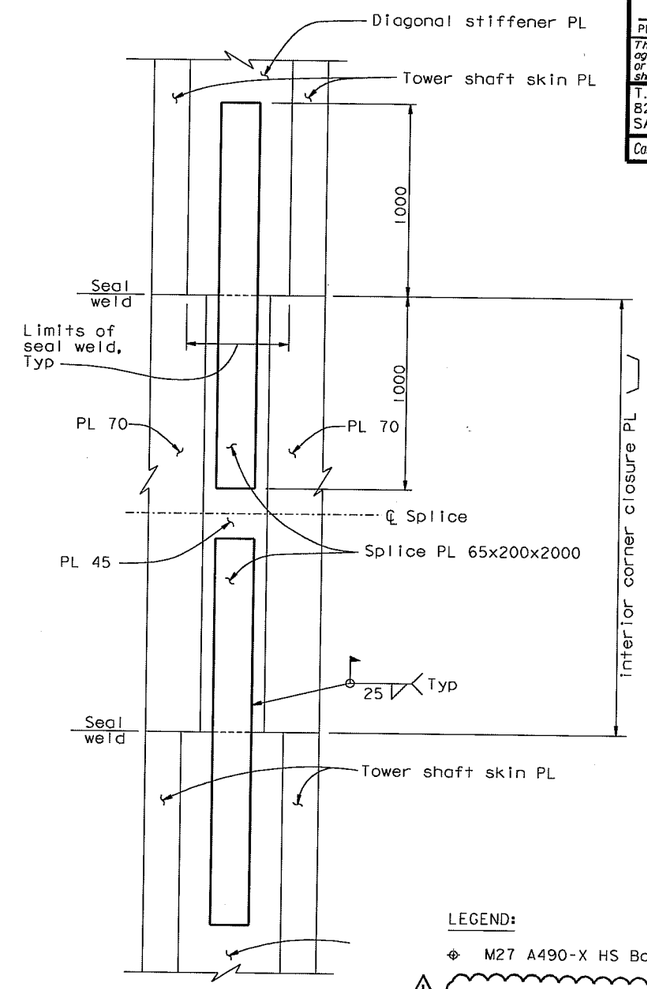

ELEVATION B-B
1:15

LEGEND:

⊕ M27 A490-X HS Bolts

NOTES:

1. The tower splice connections are designed as slip critical connections with class B contact surface (slip coefficient 0.5). The Contractor shall ensure that the flatness requirements at the faying surfaces and the geometry control are met.
2. Elevation view of adjacent skin plate not shown for clarity.

MARK	DATE	DESCRIPTIONS	BY	CH'D	CCO#
1	06/23/06	SPLICE PLATES PER ISM	MN	NV	21

REVISIONS

CONTRACT CHANGE ORDER NO. ____
SHEET ___ OF ___

ALL DIMENSIONS ARE IN MILLIMETERS UNLESS OTHERWISE SHOWN

R. Valizadeh/V. Toan/Y.L./W.L./F.C.
DESIGN OVERSIGHT
SIGN OFF DATE 06/23/06

Rev. Date: 5-18-98

	BY	CHECKED
DESIGN	M. Nader	N. Vo
DETAILS	J. Lopez	N. Vo
QUANTITIES	J. Lopez	N. Vo

ORIGINAL SCALE IN MILLIMETERS FOR REDUCED PLANS 0 10 20 30 40 50 60 70 80 90 100

PREPARED FOR THE STATE OF CALIFORNIA DEPARTMENT OF TRANSPORTATION

R. Manzanarez
PROJECT ENGINEER

CU 04
EA 0120F1

BRIDGE NO. 34-0006L/R
KILOMETER POST 13.2/13.9

SAN FRANCISCO OAKLAND BAY BRIDGE
EAST SPAN SEISMIC SAFETY PROJECT
SELF-ANCHORED SUSPENSION BRIDGE
(SUPERSTRUCTURE & TOWER)

TOWER SPLICE DETAILS NO. 15

DISREGARD PRINTS BEARING EARLIER REVISION DATES

REVISION DATES (PRELIMINARY STAGE ONLY) 08/30/99 05/31/01 04/08/02 07/01/02 12/19/02

SHEET 137R1 OF

FILE => I:\bb\04-012001\sas\contract plans and cco\cco\cco*21\aetsp15.dgn

USERNAME => ptom DATE PLOTTED => 23 APR 2007 TIME PLOTTED => 16:26:39

100 % PS&E

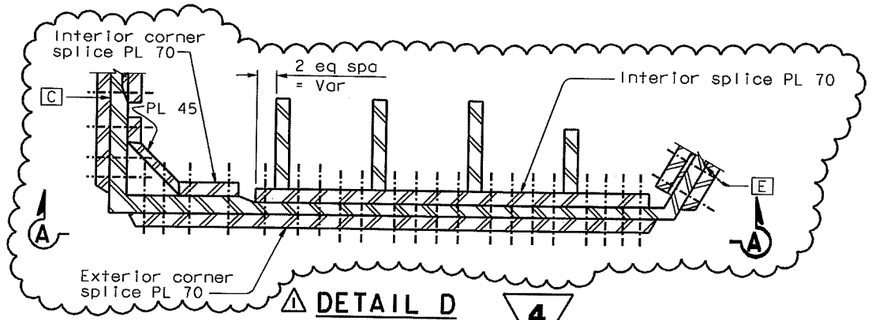

DETAIL D
1:15

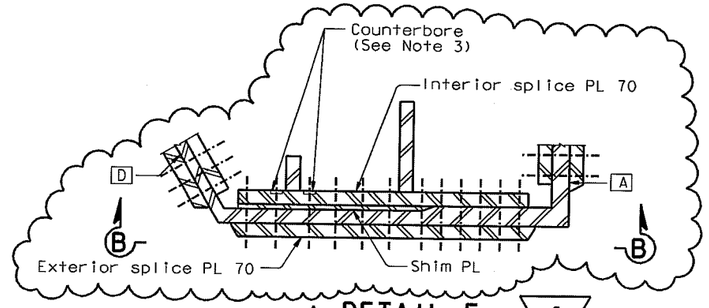

DETAIL E
1:15

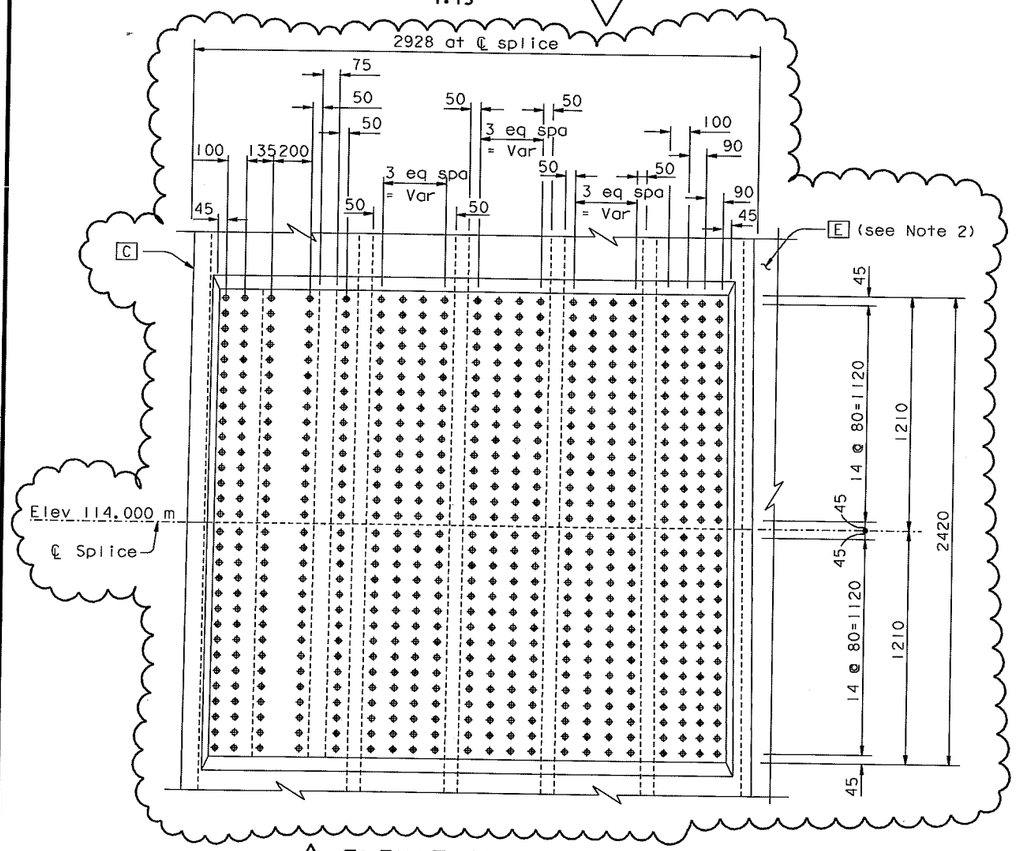

ELEVATION A-A
1:15

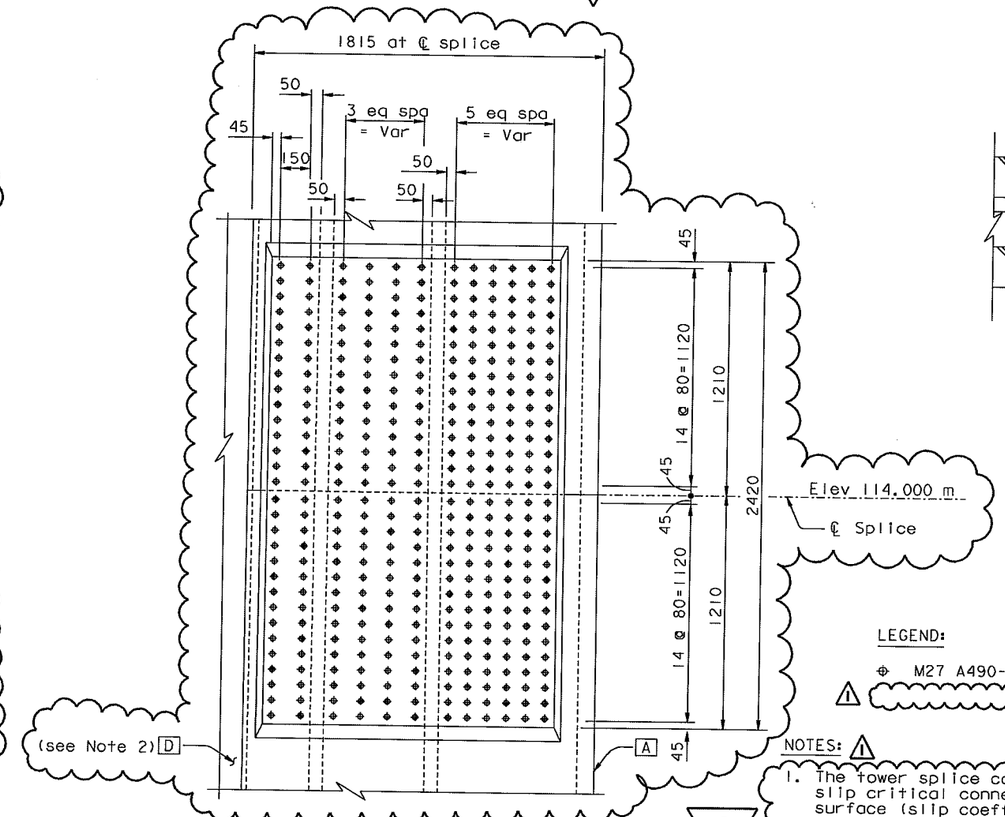

ELEVATION B-B
1:15

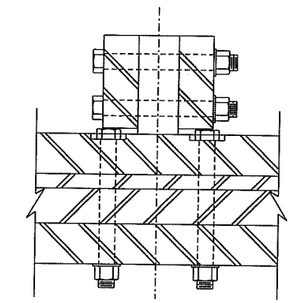

DETAIL A
NTS

TOWER SKIN PLATE D

TOWER SKIN PLATE E

LEGEND:

⊕ M27 A490-X HS Bolts

NOTES:

1. The tower splice connections are designed as slip critical connections with class B contact surface (slip coefficient 0.5). The Contractor shall ensure that the flatness requirements at the faying surfaces and the geometry control are met.
2. Elevation view of adjacent skin plate not shown for clarity.
3. To facilitate installation of the bolted splice for longitudinal stiffener E7, the Contractor may use counterbore for the bolt head in the interior splice plate for the first bolt row on each side of the longitudinal stiffener. Each counterbore shall be 60 mm Dia and 10 mm deep (see Detail A).

MARK	DATE	DESCRIPTIONS	BY	CH'D	CCO#
1	06/23/06	SPLICE PLATES PER ISM	MN	NV	21

REVISIONS

CONTRACT CHANGE ORDER NO. ____
SHEET ____ OF ____

4 REVISED PER ADDENDUM NO. 4 DATED DECEMBER 9, 2005

ALL DIMENSIONS ARE IN MILLIMETERS UNLESS OTHERWISE SHOWN

DIST.	COUNTY	ROUTE	KILOMETER POST TOTAL PROJECT	SHEET NO.	TOTAL SHEETS
04	SF	80	13.2/13.9	555R1	1204

REGISTERED ENGINEER - CIVIL
12-6-04
PLANS APPROVAL DATE

REGISTERED PROFESSIONAL ENGINEER Morwan N. Nader No. C 054426 Exp. 12/31/07 CIVIL STATE OF CALIFORNIA

The State of California or its officers or agents shall not be responsible for the accuracy or completeness of electronic copies of this plan sheet.

T.Y. LIN / MOFFATT & NICHOL
825 BATTERY STREET
SAN FRANCISCO, CA 94111

To get to the web site, go to: http://www.dot.ca.gov

R. Valizadeh/V. Toan/Y.L./W.L./F.C.
DESIGN OVERSIGHT
SIGN OFF DATE 06/23/06
Rev. Date: 5-18-98

DESIGN	BY M. Nader	CHECKED N. Vo	
DETAILS	BY J. Lopez	CHECKED N. Vo	
QUANTITIES	BY J. Lopez	CHECKED N. Vo	

PREPARED FOR THE STATE OF CALIFORNIA DEPARTMENT OF TRANSPORTATION

R. Manzanarez
PROJECT ENGINEER

BRIDGE NO. 34-0006L/R
KILOMETER POST 13.2/13.9

SAN FRANCISCO OAKLAND BAY BRIDGE
EAST SPAN SEISMIC SAFETY PROJECT
SELF-ANCHORED SUSPENSION BRIDGE
(SUPERSTRUCTURE & TOWER)

TOWER SPLICE DETAILS NO. 16

ORIGINAL SCALE IN MILLIMETERS FOR REDUCED PLANS 0 10 20 30 40 50 60 70 80 90 100

CU 04
EA 0120F1

DISREGARD PRINTS BEARING EARLIER REVISION DATES

REVISION DATES (PRELIMINARY STAGE ONLY) 08/02/99 05/31/01 04/08/02 07/01/02 12/19/02 11/13/05

SHEET 138R1 OF

FILE => I:\bb\04-01200I\sas\contract plans and cco\cco\cco#21\aetsp16.dgn

100 % PS&E

USERNAME => ptom DATE PLOTTED => 23 APR 2007 TIME PLOTTED => 16:27:39

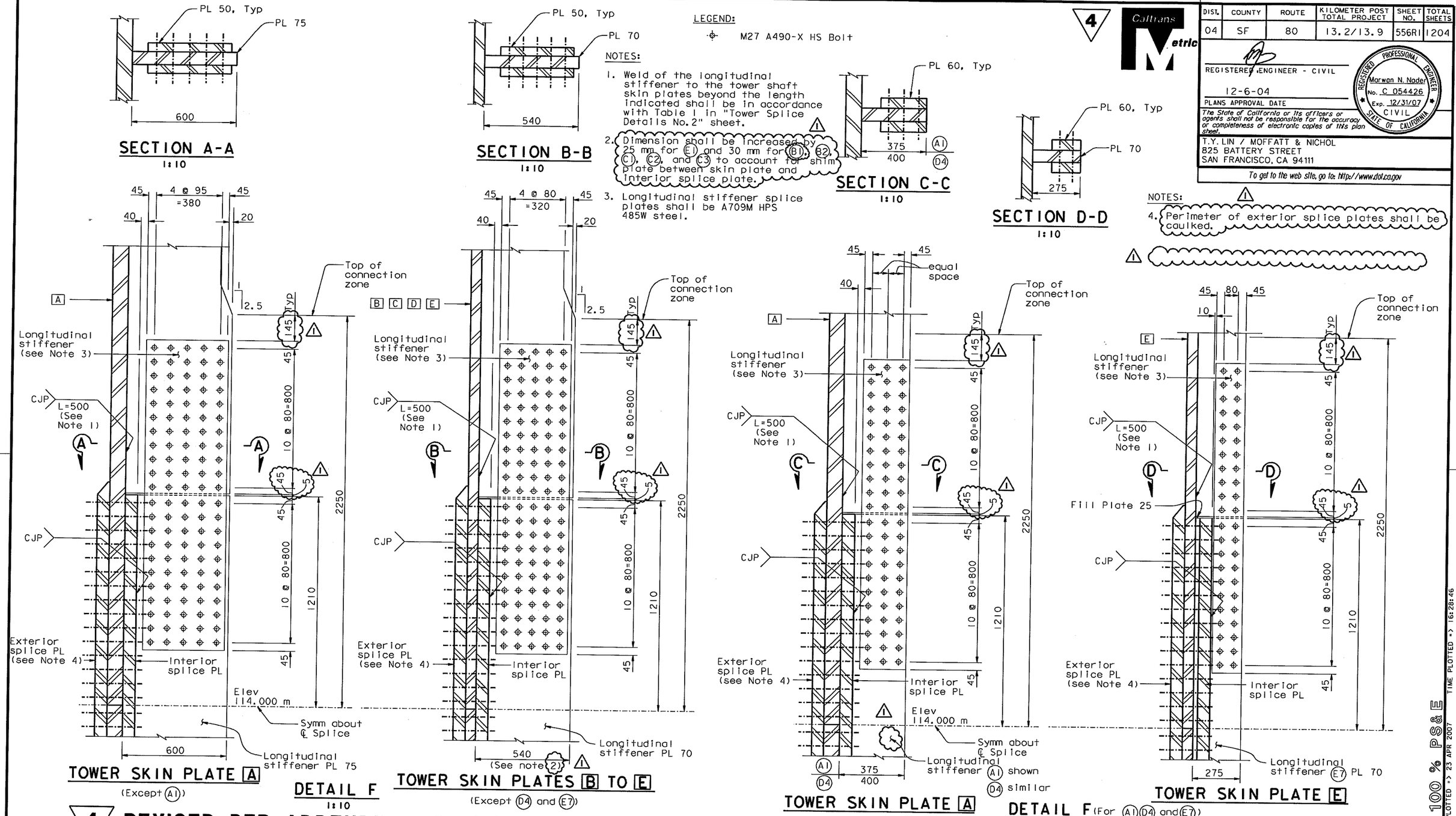

LEGEND:

M27 A490-X HS Bolt

NOTES:

1. Weld of the longitudinal stiffener to the tower shaft skin plates beyond the length indicated shall be in accordance with Table 1 in "Tower Splice Details No. 2" sheet.
2. Dimension shall be increased by 25 mm for E1 and 30 mm for B1, B2, C1, C2, and C3 to account for shim plate between skin plate and interior splice plate.
3. Longitudinal stiffener splice plates shall be A709M HPS 485W steel.

NOTES:

4. Perimeter of exterior splice plates shall be caulked.

DETAIL F
1:10

DETAIL F (For A1 D4 and E7)
1:10

4 REVISED PER ADDENDUM NO. 4 DATED DECEMBER 9, 2005

ALL DIMENSIONS ARE IN MILLIMETERS UNLESS OTHERWISE SHOWN

DIST.	COUNTY	ROUTE	KILOMETER POST TOTAL PROJECT	SHEET NO.	TOTAL SHEETS
04	SF	80	13.2/13.9	556R1	1204

REGISTERED ENGINEER - CIVIL

12-6-04
PLANS APPROVAL DATE

REGISTERED PROFESSIONAL ENGINEER Marwan N. Nader No. C 054426 Exp. 12/31/07 CIVIL STATE OF CALIFORNIA

The State of California or its officers or agents shall not be responsible for the accuracy or completeness of electronic copies of this plan sheet.

T.Y. LIN / MOFFATT & NICHOL
825 BATTERY STREET
SAN FRANCISCO, CA 94111

To get to the web site, go to: http://www.dot.ca.gov

Caltrans Metric

R. Valizadeh/V. Toan/Y.L./W.L./F.C.
DESIGN OVERSIGHT
Reza Valizadeh / Vong Toan / Y. Lin
SIGN OFF DATE 06/23/06
Rev. Date: 5-18-98

MARK	DATE	DESCRIPTIONS	BY	CH'D	CCO#
1	06/23/06	LONG. STIFFENER GAP & MISC.	MN	NV	21

REVISIONS

CONTRACT CHANGE ORDER NO. ____
SHEET ____ OF ____

	BY	CHECKED
DESIGN	M. Nader	N. Vo
DETAILS	J. Lopez	N. Vo
QUANTITIES	J. Lopez	N. Vo

PREPARED FOR THE STATE OF CALIFORNIA DEPARTMENT OF TRANSPORTATION

R. Manzanarez
PROJECT ENGINEER

BRIDGE NO. 34-0006L/R
KILOMETER POST 13.2/13.9

SAN FRANCISCO OAKLAND BAY BRIDGE
EAST SPAN SEISMIC SAFETY PROJECT
SELF-ANCHORED SUSPENSION BRIDGE
(SUPERSTRUCTURE & TOWER)

TOWER SPLICE DETAILS NO. 17

ORIGINAL SCALE IN MILLIMETERS FOR REDUCED PLANS 0 10 20 30 40 50 60 70 80 90 100

CU 04
EA 0120F1

DISREGARD PRINTS BEARING EARLIER REVISION DATES

REVISION DATES (PRELIMINARY STAGE ONLY) 05/31/01 04/08/02 07/01/02 12/19/02 11/13/05

SHEET 139R1 OF

FILE => I:\bb\04-012001\sas\contract plans and cco\cco\cco#21\aetspl7.dgn

100 % PS&E

USERNAME => ptom DATE PLOTTED => 23 APR 2007 TIME PLOTTED => 16:28:46

DIST.	COUNTY	ROUTE	KILOMETER POST TOTAL PROJECT	SHEET NO.	TOTAL SHEETS
04	SF	80	13.2/13.9	557R1	1204

Caltrans Metric

REGISTERED ENGINEER - CIVIL

12-6-04

PLANS APPROVAL DATE

REGISTERED PROFESSIONAL ENGINEER Marwan N. Nader No. C 054426 Exp. 12/31/07 CIVIL STATE OF CALIFORNIA

The State of California or its officers or agents shall not be responsible for the accuracy or completeness of electronic copies of this plan sheet.

T.Y. LIN / MOFFATT & NICHOL
825 BATTERY STREET
SAN FRANCISCO, CA 94111

To get to the web site, go to: http://www.dot.ca.gov

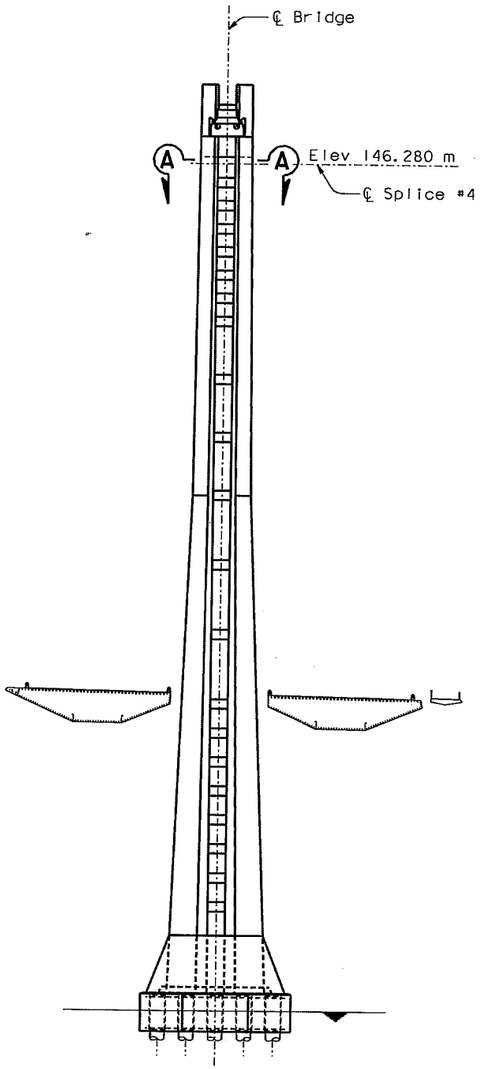

TOWER SPLICE LOCATION
1:500

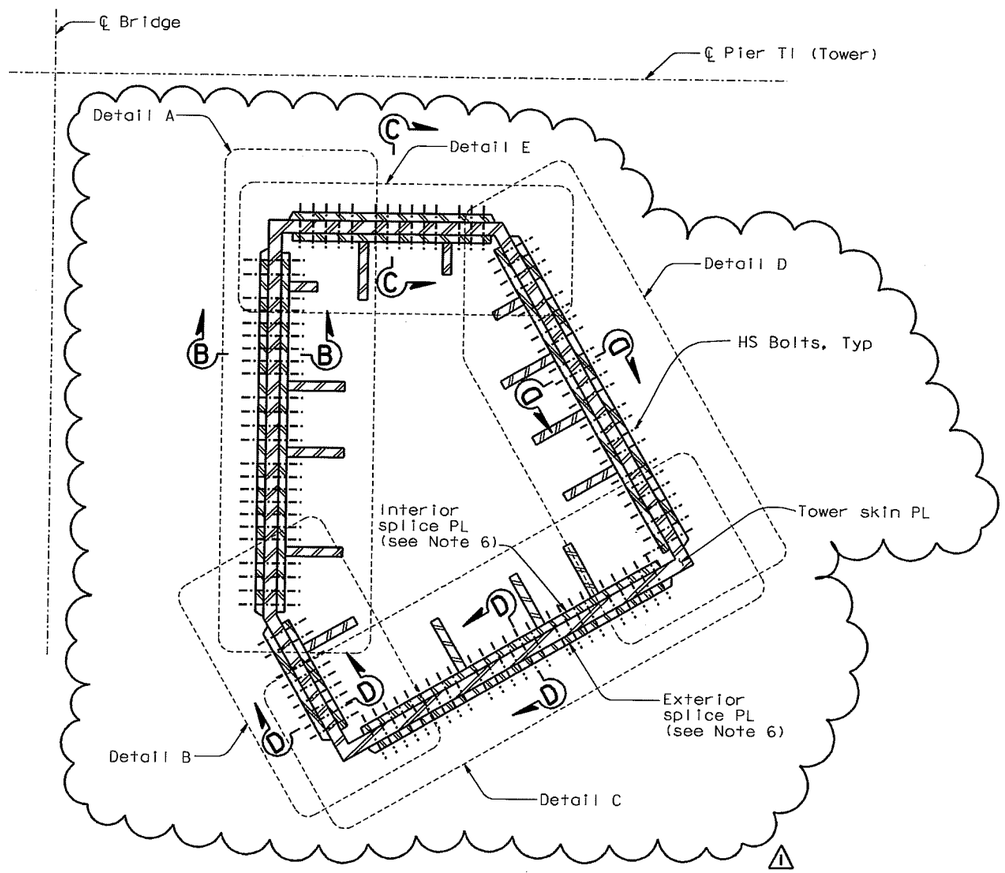

4 SECTION A-A
1:20

TOWER SHAFT SPLICE #4
(Tower Grillage to Tower Shaft Splice)

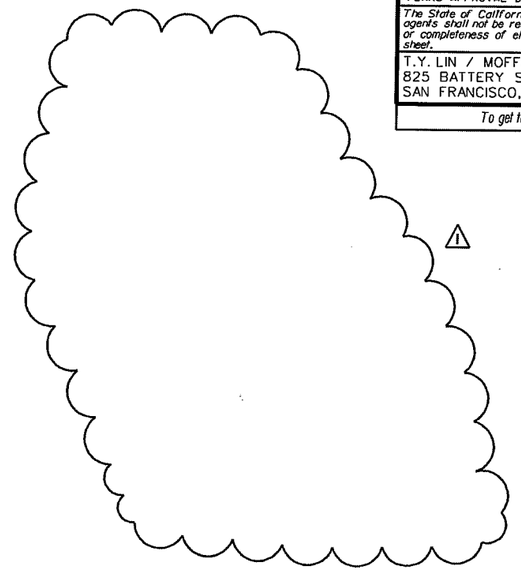

MARK	DATE	DESCRIPTIONS	BY	CH'D	CCO#
1	06/23/06	SPLICE PLATES PER ISM	MN	NV	21

REVISIONS

CONTRACT CHANGE ORDER NO. ____
SHEET ____ OF ____

NOTES:

1. For Sections B-B, C-C and D-D, see "Tower Splice Details No. 19" sheet.
2. For Details A and B, see "Tower Splice Details No. 20" sheet.
3. For Details C and D, see "Tower Splice Details No. 21" sheet.
4. For Detail E, see "Tower Splice Details No. 22" sheet.
5. For tower grillage details, see "Tower Saddle Grillage Details" sheets.
6. For splice #4, splice plates shall be A709M HPS 485W steel. For limits of steel type, see "Tower Splice Details No. 19" sheet.
7. The tower splice connections are designed as slip critical connections with class B contact surface (slip coefficient 0.5). The Contractor shall ensure that the flatness requirements are met at the faying surfaces.

4 **REVISED PER ADDENDUM NO. 4 DATED DECEMBER 9, 2005**

ALL DIMENSIONS ARE IN MILLIMETERS UNLESS OTHERWISE SHOWN

R. Valizadeh/V. Toan/Y.L./W.L./F.C.
DESIGN OVERSIGHT
Reza Valizadeh / Vong Toan / Y. Liu
SIGN OFF DATE 06/23/06
Rev. Date: 5-18-98

	BY	CHECKED
DESIGN	M. Nader	M. Gulyas
DETAILS	C. Choi	N. Vo
QUANTITIES	R. Kanitkar	Y. Zhang

PREPARED FOR THE STATE OF CALIFORNIA DEPARTMENT OF TRANSPORTATION

R. Manzanarez
PROJECT ENGINEER

BRIDGE NO. 34-0006L/R
KILOMETER POST 13.2/13.9

SAN FRANCISCO OAKLAND BAY BRIDGE
EAST SPAN SEISMIC SAFETY PROJECT
SELF-ANCHORED SUSPENSION BRIDGE
(SUPERSTRUCTURE & TOWER)

TOWER SPLICE DETAILS NO. 18

ORIGINAL SCALE IN MILLIMETERS FOR REDUCED PLANS 0 10 20 30 40 50 60 70 80 90 100

CU 04
EA 0120F1

DISREGARD PRINTS BEARING EARLIER REVISION DATES

REVISION DATES (PRELIMINARY STAGE ONLY) 05/31/01 04/08/02 07/01/02 12/19/02 11/13/05

SHEET 140R1 OF

FILE => I:\bb\04-012001\sas\contract plans and cco\cco\cco#21\aetspl8.dgn

100 % PS&E

USERNAME => ptom DATE PLOTTED => 23 APR 2007 TIME PLOTTED => 16:29:48

4 REVISED PER ADDENDUM NO. 4 DATED DECEMBER 9, 2005

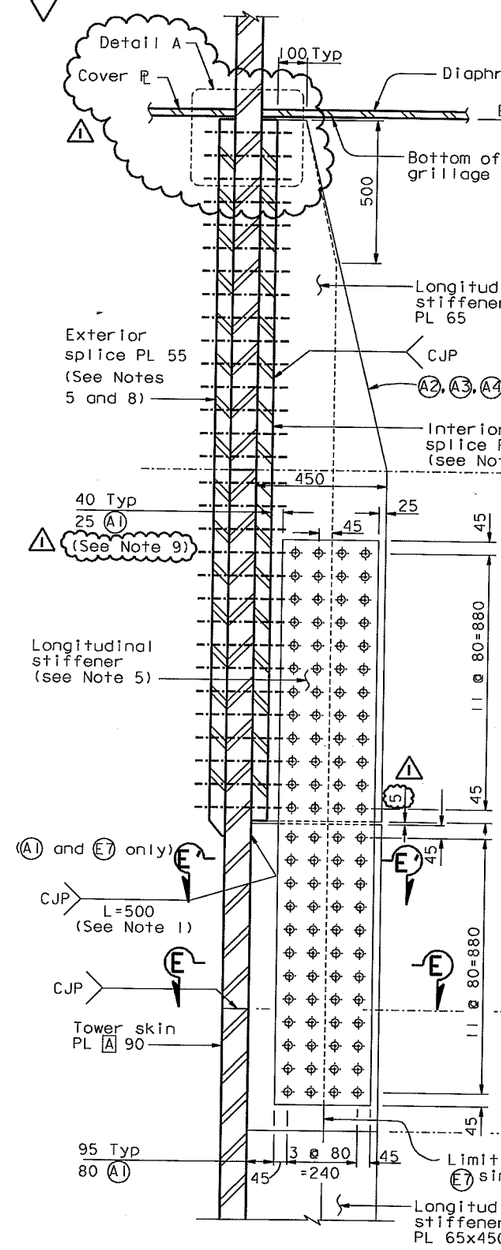

SECTION B-B
1:10
TOWER SKIN PLATE A

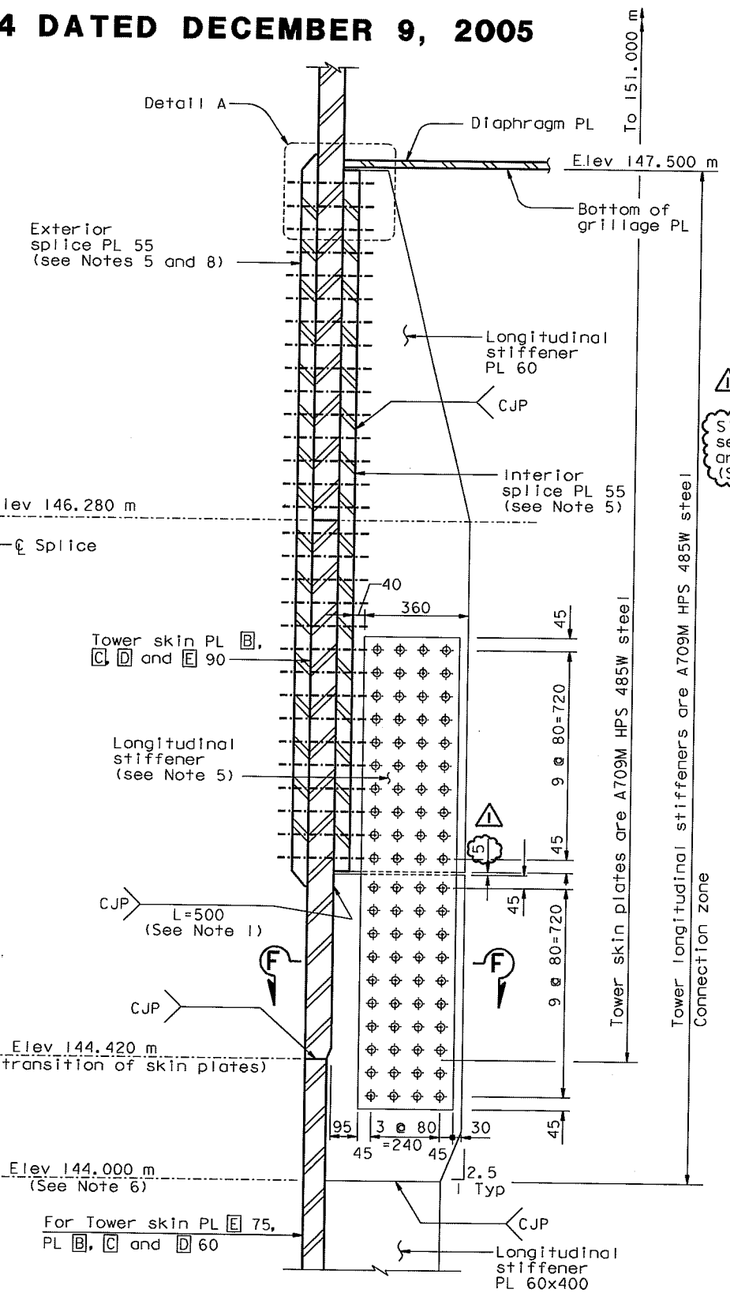

SECTION C-C (Section D-D similar)
1:10
TOWER SKIN PLATE B TO E
(Except E7)

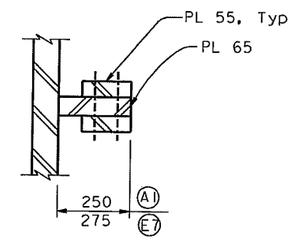

SECTION E'-E' (A1 and E7 only)
1:10

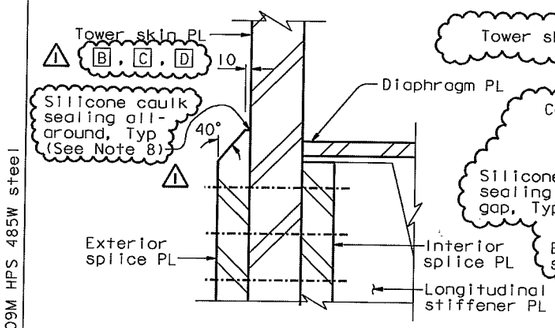

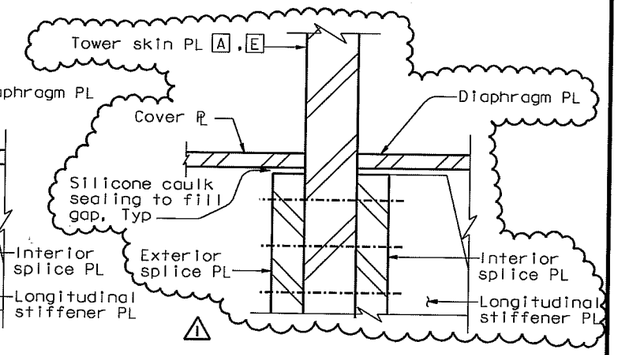

DETAIL A (see Note 7)
1:5

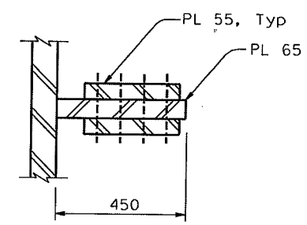

SECTION E-E (A2, A3, A4)
1:10

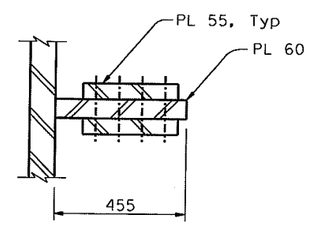

SECTION F-F
1:10

NOTES:

1. Weld of longitudinal stiffener to the tower shaft skin plates beyond the length indicated shall be in accordance with Table I in "Tower Splice Details No. 2" sheet.
2. Longitudinal stiffeners for skin plate "A" are 450 deep UNO. Longitudinal stiffeners for skin plates "B" through "E" are 455 deep UNO.
3. For tower grillage details, see "Tower Saddle Grillage Details" sheets.
4. For tower plate and stiffener sizes above elevation 144.000 m, see "Tower Saddle Grillage Details" sheets.
5. For splice #4, splice plates shall be A709M HPS 485W steel.
6. Elevation 144 corresponds to the change of stiffener size, see "Tower Shaft Details" sheets.
7. Longitudinal stiffeners B1 and D4 shall be coped at the top as shown on "Tower Saddle Grillage Details No. 7" sheet.
8. Silicone caulk sealing shall be applied around the perimeter (horizontal and vertical edges) of all exterior splice plates.
9. To facilitate installation of the bolted splice for longitudinal stiffener A1, the Contractor may use counterbore for the bolt head in the interior splice plate for the first bolt row on each side of the longitudinal stiffener. Each counterbore shall be 60 mm Dia and 10 mm deep. See Detail A on "Tower Splice Details No. 16" sheet.

LEGEND:

M27 A490-X HS Bolt

ALL DIMENSIONS ARE IN MILLIMETERS UNLESS OTHERWISE SHOWN

DIST.	COUNTY	ROUTE	KILOMETER POST TOTAL PROJECT	SHEET NO.	TOTAL SHEETS
04	SF	80	13.2/13.9	558R1	1204

REGISTERED ENGINEER - CIVIL
1-27-03
PLANS APPROVAL DATE
REGISTERED PROFESSIONAL ENGINEER Morwan N. Nader No. C 054426 Exp. 12/31/07 CIVIL STATE OF CALIFORNIA

The State of California or its officers or agents shall not be responsible for the accuracy or completeness of electronic copies of this plan sheet.

T.Y. LIN / MOFFATT & NICHOL
825 BATTERY STREET
SAN FRANCISCO, CA 94111

To get to the web site, go to: http://www.dot.ca.gov

R. Valizadeh/V. Toan/Y.L./W.L./F.C.
DESIGN OVERSIGHT
SIGN OFF DATE 06/23/06
Rev. Date: 5-18-98

MARK	DATE	DESCRIPTIONS	BY	CH'D	CCO#
1	06/23/06	LONG. STIFFENER GAP & MISC.	MN	NV	21

REVISIONS
CONTRACT CHANGE ORDER NO. ____
SHEET ___ OF ___

	BY	CHECKED
DESIGN	M. Nader	M. Gulyas
DETAILS	R. Kanitkar	M. Gulyas
QUANTITIES	R. Kanitkar	Y. Zhang

PREPARED FOR THE STATE OF CALIFORNIA DEPARTMENT OF TRANSPORTATION

R. Manzanarez
PROJECT ENGINEER

BRIDGE NO. 34-0006L/R
KILOMETER POST 13.2/13.9

SAN FRANCISCO OAKLAND BAY BRIDGE
EAST SPAN SEISMIC SAFETY PROJECT
SELF-ANCHORED SUSPENSION BRIDGE
(SUPERSTRUCTURE & TOWER)
TOWER SPLICE DETAILS NO. 19

ORIGINAL SCALE IN MILLIMETERS FOR REDUCED PLANS 0 10 20 30 40 50 60 70 80 90 100

CU 04
EA 0120F1

DISREGARD PRINTS BEARING EARLIER REVISION DATES
REVISION DATES (PRELIMINARY STAGE ONLY) 05/24/01 04/08/02 07/01/02 12/19/02 11/13/05

SHEET 141R1 OF

FILE => I:\bb\04-012001\sas\contract plans and cco\cco\cco#21\detspl9.dgn

USERNAME => ptom
DATE PLOTTED => 23 APR 2007
TIME PLOTTED => 16:30:53
100 % PS&E

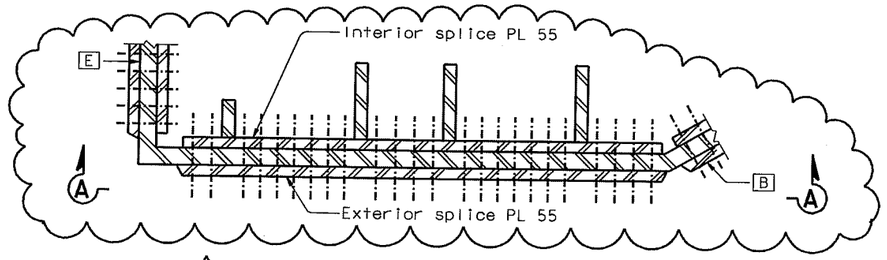

4 **DETAIL A**
1:15

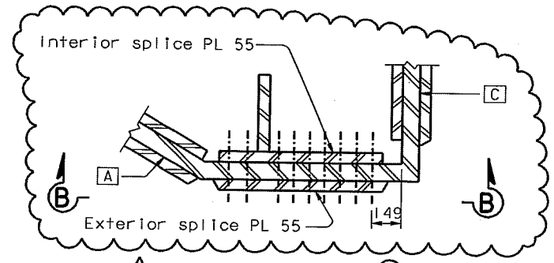

DETAIL B
1:15

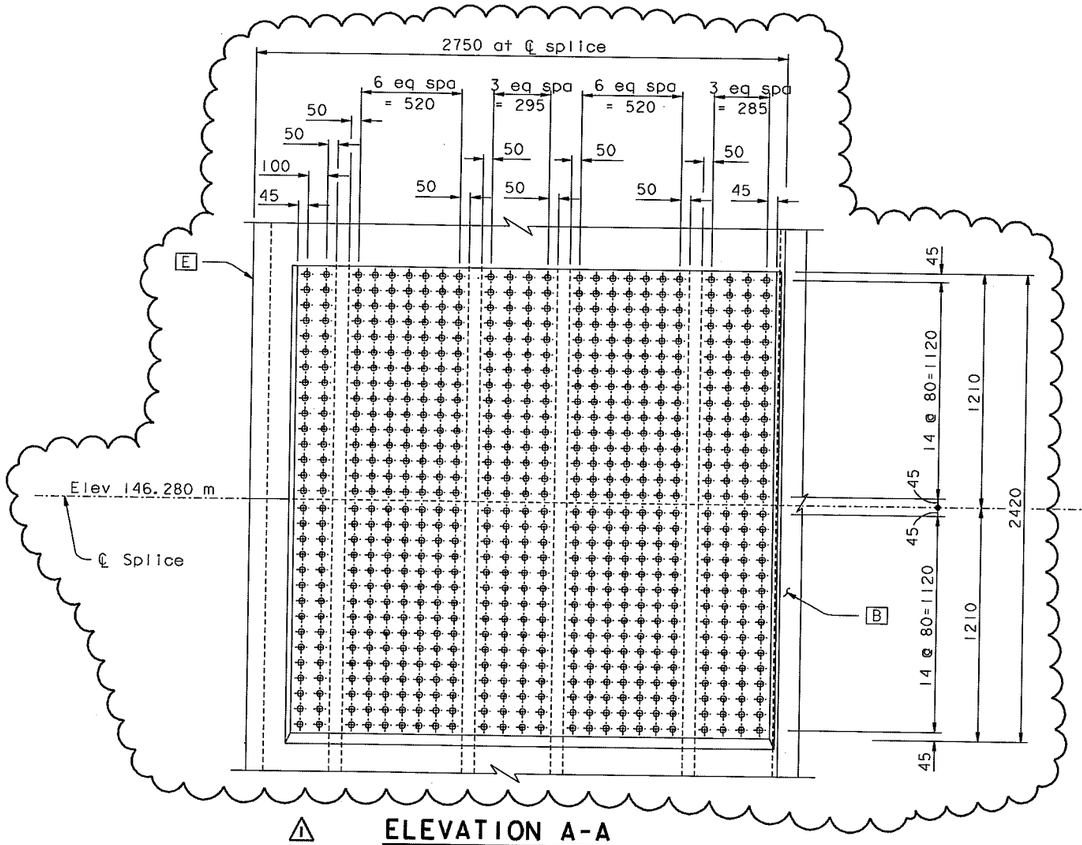

ELEVATION A-A
1:15

TOWER SKIN PLATE A

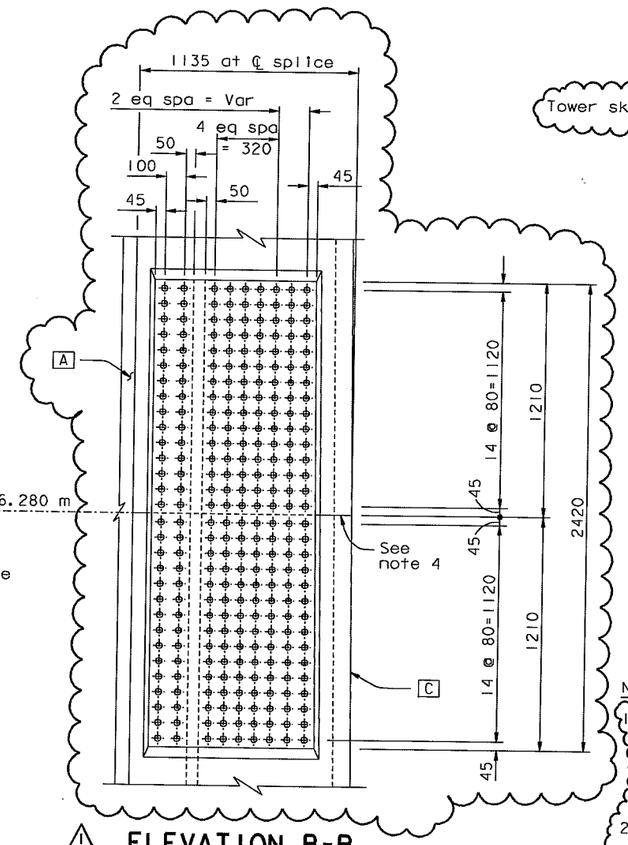

ELEVATION B-B
1:15

TOWER SKIN PLATE B

LEGEND:

⊕ M27 A490-X HS Bolts

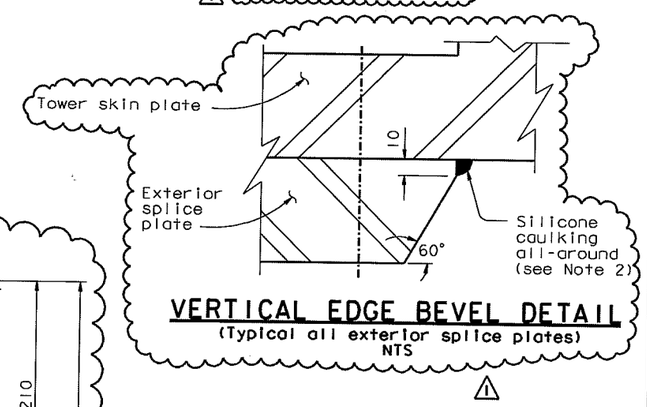

VERTICAL EDGE BEVEL DETAIL
(Typical all exterior splice plates)
NTS

MARK	DATE	DESCRIPTIONS	BY	CH'D	CCO#
1	06/23/06	SPLICE PLATES PER ISM	MN	NV	21

REVISIONS

CONTRACT CHANGE ORDER NO. ____
SHEET ___ OF ___

NOTES: 1

1. The tower splice connections are designed as slip critical connections with class B contact surface (slip coefficient 0.5). The Contractor shall ensure that the flatness requirements at the faying surfaces and the geometry control are met.
2. Silicone caulk sealing shall be applied around the perimeter (horizontal and vertical edges) of all exterior splice plates.
3. Elevation view of adjacent skin plate not shown for clarity.
4. For skin plate splice seam not covered by exterior splice plates, see details on "Tower Splice Details No. 4" sheet.

100 % PS&E

4 **REVISED PER ADDENDUM NO. 4 DATED DECEMBER 9, 2005**

ALL DIMENSIONS ARE IN MILLIMETERS UNLESS OTHERWISE SHOWN

DIST.	COUNTY	ROUTE	KILOMETER POST TOTAL PROJECT	SHEET NO.	TOTAL SHEETS
04	SF	80	13.2/13.9	559R1	1204

REGISTERED ENGINEER - CIVIL
12-6-04
PLANS APPROVAL DATE

REGISTERED PROFESSIONAL ENGINEER Marwan N. Nader No. C 054426 Exp. 12/31/07 CIVIL STATE OF CALIFORNIA

The State of California or its officers or agents shall not be responsible for the accuracy or completeness of electronic copies of this plan sheet.

T.Y. LIN / MOFFATT & NICHOL
825 BATTERY STREET
SAN FRANCISCO, CA 94111

To get to the web site, go to: http://www.dot.ca.gov

R. Valizadeh/V. Toan/Y.L./W.L./F.C.
DESIGN OVERSIGHT
SIGN OFF DATE 06/23/06

Rev. Date: 5-18-98

	BY	CHECKED
DESIGN	M. Nader	M. Guiyas
DETAILS	C. Choi	N. Vo
QUANTITIES	R. Konitkar	Y. Zhang

PREPARED FOR THE STATE OF CALIFORNIA DEPARTMENT OF TRANSPORTATION

R. Manzanarez
PROJECT ENGINEER

BRIDGE NO. 34-0006L/R
KILOMETER POST 13.2/13.9

SAN FRANCISCO OAKLAND BAY BRIDGE EAST SPAN SEISMIC SAFETY PROJECT
SELF-ANCHORED SUSPENSION BRIDGE (SUPERSTRUCTURE & TOWER)

TOWER SPLICE DETAILS NO. 20

ORIGINAL SCALE IN MILLIMETERS FOR REDUCED PLANS 0 10 20 30 40 50 60 70 80 90 100

CU 04
EA 0120F1

DISREGARD PRINTS BEARING EARLIER REVISION DATES 05/31/01 04/06/02 07/01/02 12/19/02 11/13/05

SHEET 142R1 OF

FILE => I:\bb\04-012001\sas\contract plans and cco\cco\cco#21\aetsp20.dgn

USERNAME => ptom DATE PLOTTED => 23 APR 2007 TIME PLOTTED => 16:31:41

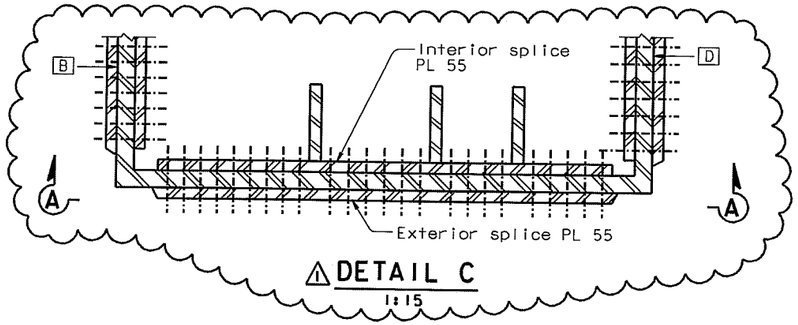

⚠ DETAIL C
1:15

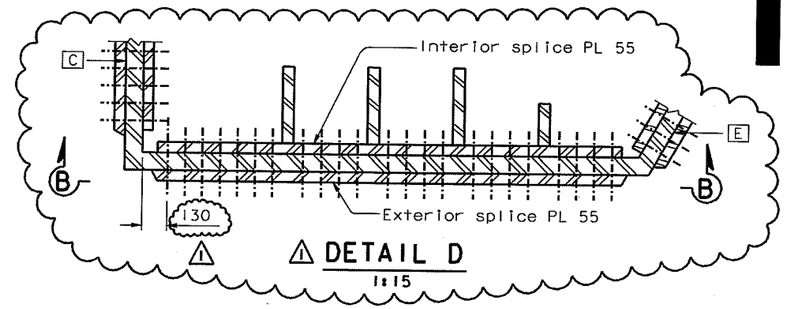

⚠ DETAIL D
1:15

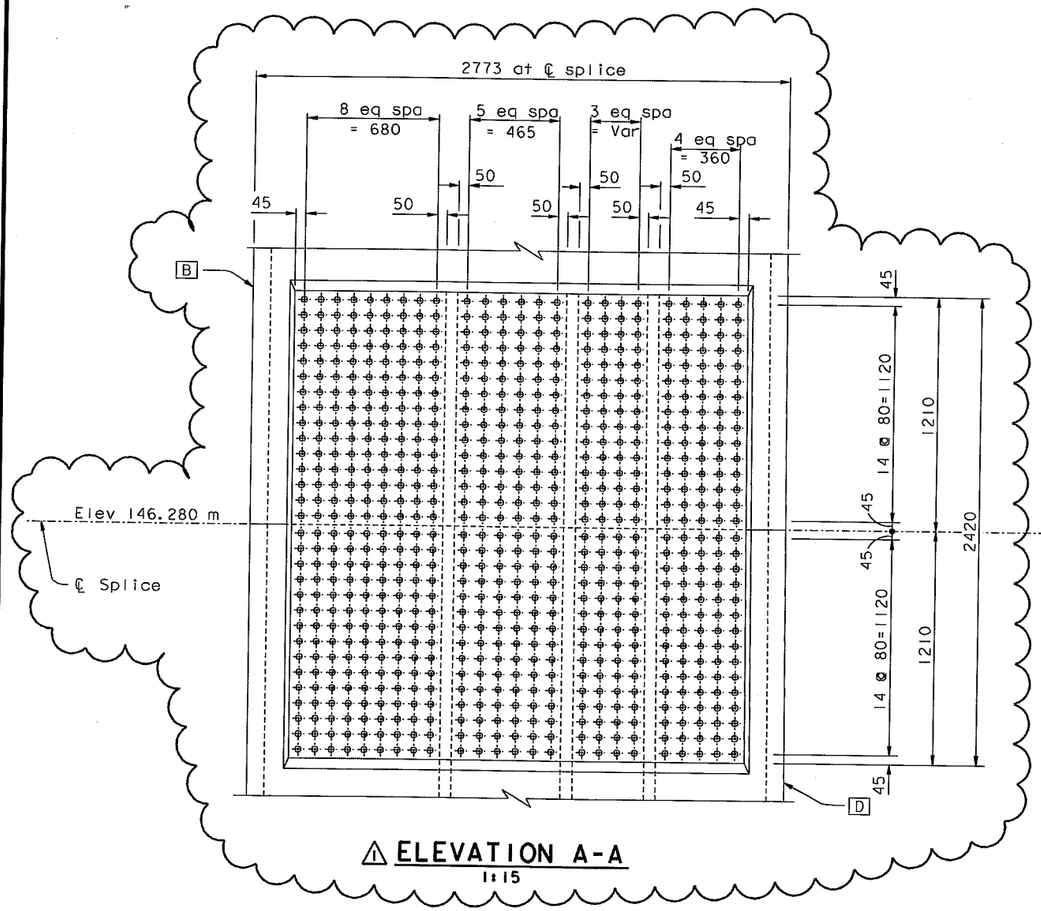

⚠ ELEVATION A-A
1:15

TOWER SKIN PLATE C

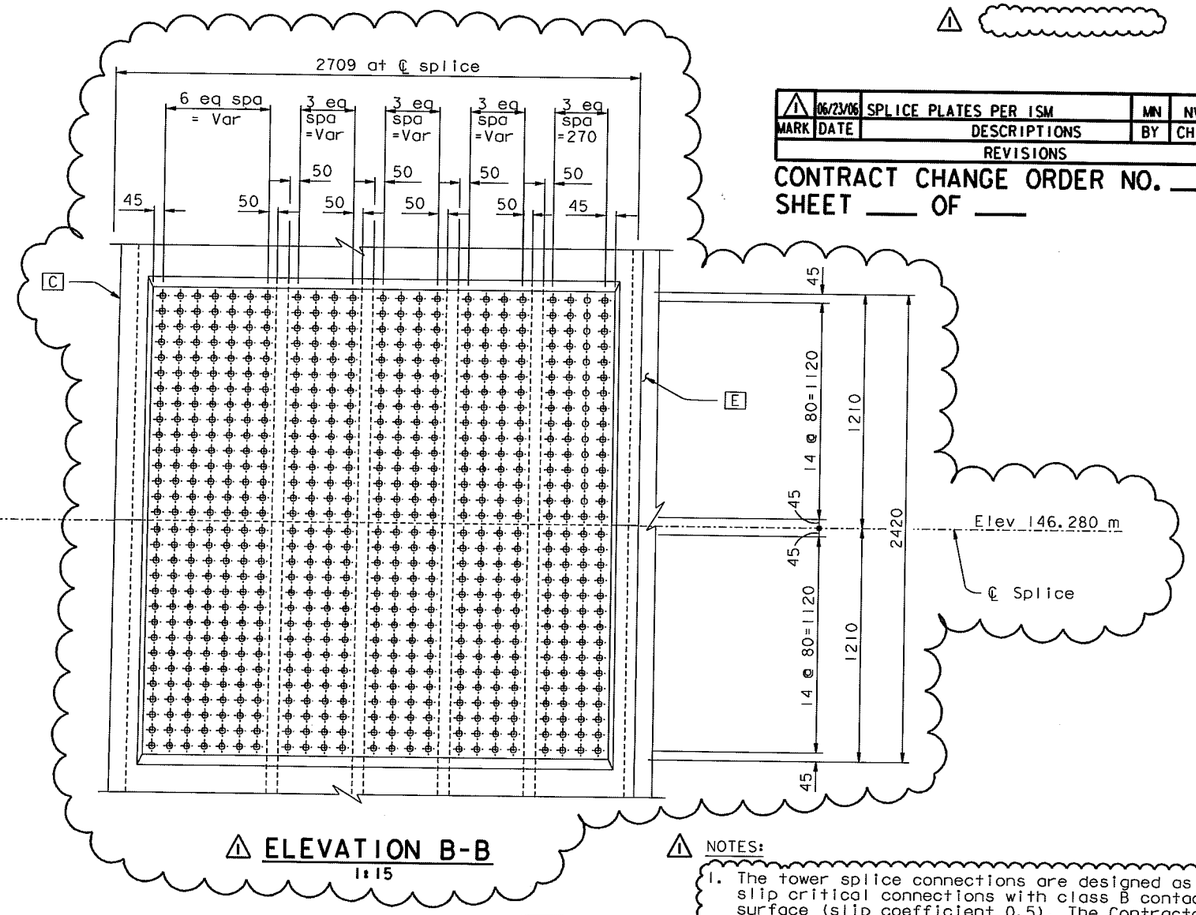

⚠ ELEVATION B-B
1:15

TOWER SKIN PLATE D

Caltrans Metric

DIST.	COUNTY	ROUTE	KILOMETER POST TOTAL PROJECT	SHEET NO.	TOTAL SHEETS
04	SF	80	13.2/13.9	560R1	1204

REGISTERED ENGINEER - CIVIL

12-6-04
PLANS APPROVAL DATE

REGISTERED PROFESSIONAL ENGINEER Marwan N. Nader No. C 054426 Exp. 12/31/07 CIVIL STATE OF CALIFORNIA

The State of California or its officers or agents shall not be responsible for the accuracy or completeness of electronic copies of this plan sheet.

T.Y. LIN / MOFFATT & NICHOL
825 BATTERY STREET
SAN FRANCISCO, CA 94111

To get to the web site, go to: http://www.dot.ca.gov

LEGEND:

⊕ M27 A490-X HS Bolts

⚠

MARK	DATE	DESCRIPTIONS	BY	CH'D	CCO#
⚠1	06/23/06	SPLICE PLATES PER ISM	MN	NV	21

REVISIONS

CONTRACT CHANGE ORDER NO. ____
SHEET ___ OF ___

⚠ NOTES:

1. The tower splice connections are designed as slip critical connections with class B contact surface (slip coefficient 0.5). The Contractor shall ensure that the flatness requirements at the faying surfaces and the geometry control are met.
2. Elevation view of adjacent skin plate not shown for clarity.

100 % PS&E

ALL DIMENSIONS ARE IN MILLIMETERS UNLESS OTHERWISE SHOWN

R. Valizadeh/V. Toan/Y.L./W.L./F.C.
DESIGN OVERSIGHT
Roger Valizadeh / Vong Toan / Y. Lin
SIGN OFF DATE 06/23/06
Rev. Date: 5-18-98

DESIGN	BY M. Nader	CHECKED M. Gulyas	
DETAILS	BY C. Choi	CHECKED N. Vo	
QUANTITIES	BY R. Kanitkar	CHECKED Y. Zhang	

PREPARED FOR THE STATE OF CALIFORNIA DEPARTMENT OF TRANSPORTATION

R. Manzanarez
PROJECT ENGINEER

BRIDGE NO. 34-0006L/R
KILOMETER POST 13.2/13.9

SAN FRANCISCO OAKLAND BAY BRIDGE
EAST SPAN SEISMIC SAFETY PROJECT
SELF-ANCHORED SUSPENSION BRIDGE
(SUPERSTRUCTURE & TOWER)

TOWER SPLICE DETAILS NO. 21

ORIGINAL SCALE IN MILLIMETERS FOR REDUCED PLANS 0 10 20 30 40 50 60 70 80 90 100

CU 04
EA 0120F1

DISREGARD PRINTS BEARING EARLIER REVISION DATES

REVISION DATES (PRELIMINARY STAGE ONLY) 05/31/01 04/08/02 07/01/02 12/19/02

SHEET 143R1 OF

FILE => I:\bb\04-012001\sas\contract plans and cco\cco\cco#21\aetsp21.dgn

USERNAME => ptom DATE PLOTTED => 23 APR 2007 TIME PLOTTED => 16:32:50

DIST.	COUNTY	ROUTE	KILOMETER POST TOTAL PROJECT	SHEET NO.	TOTAL SHEETS
04	SF	80	13.2/13.9	561R1	1204

REGISTERED ENGINEER - CIVIL

12-6-04
PLANS APPROVAL DATE

REGISTERED PROFESSIONAL ENGINEER Morwan N. Nader No. C 054426 Exp. 12/31/07 CIVIL STATE OF CALIFORNIA

The State of California or its officers or agents shall not be responsible for the accuracy or completeness of electronic copies of this plan sheet.

T.Y. LIN / MOFFATT & NICHOL
825 BATTERY STREET
SAN FRANCISCO, CA 94111

To get to the web site, go to: http://www.dot.ca.gov

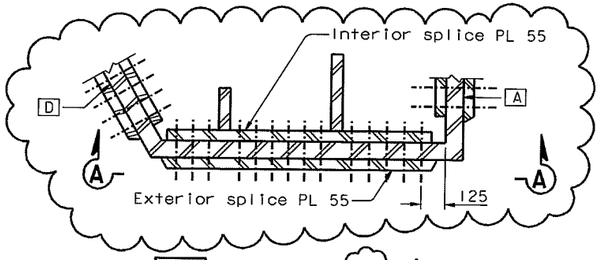

4 DETAIL E
1:15

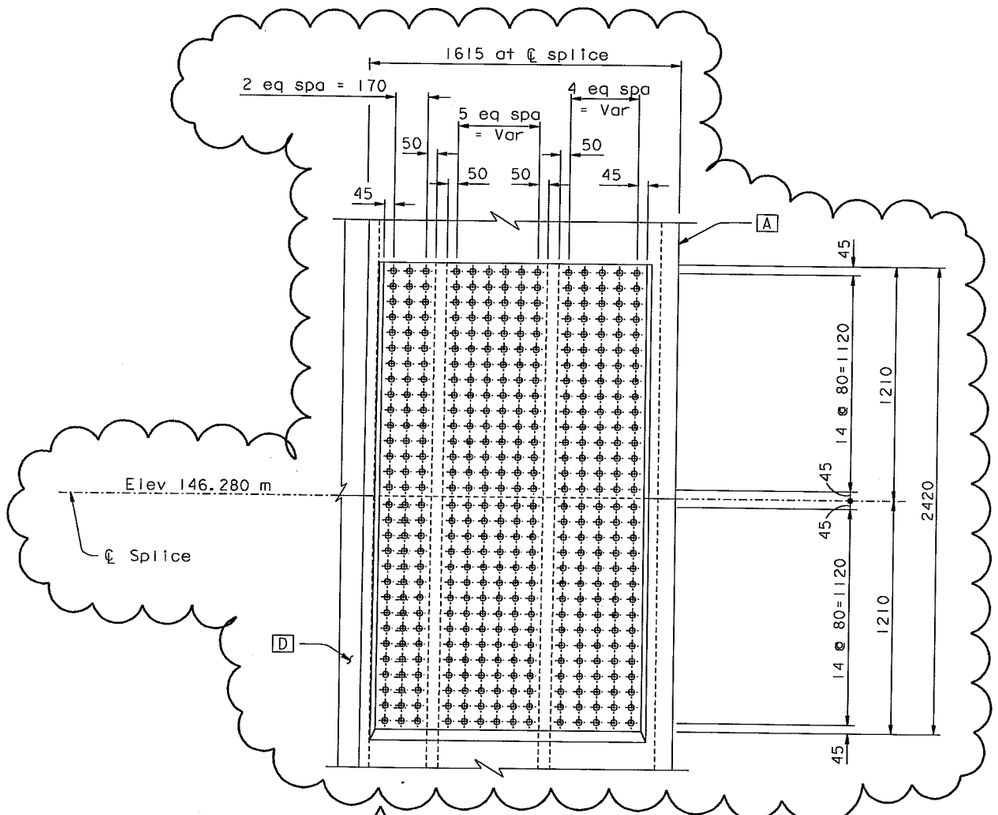

ELEVATION A-A
1:15

TOWER SKIN PLATE E

LEGEND:

⊕ M27 A490-X HS Bolts

MARK	DATE	DESCRIPTIONS	BY	CH'D	CCO#
1	06/23/06	SPLICE PLATES PER ISM	MN	NV	21

REVISIONS

CONTRACT CHANGE ORDER NO. ____
SHEET ___ OF ___

NOTES:

1. The tower splice connections are designed as slip critical connections with class B contact surface (slip coefficient 0.5). The Contractor shall ensure that the flatness requirements at the faying surfaces and the geometry control are met.
2. Elevation view of adjacent skin plate not shown for clarity.

4 REVISED PER ADDENDUM NO. 4 DATED DECEMBER 9, 2005

ALL DIMENSIONS ARE IN MILLIMETERS UNLESS OTHERWISE SHOWN

R. Volizadeh/V. Toon/Y.L./W.L./F.C.
DESIGN OVERSIGHT
SIGN OFF DATE 06/23/06
Rev. Date: 5-15-98

DESIGN BY M. Nader CHECKED M. Gulyas
DETAILS BY C. Choi CHECKED N. Vo
QUANTITIES BY R. Kanitkar CHECKED Y. Zhang

PREPARED FOR THE STATE OF CALIFORNIA DEPARTMENT OF TRANSPORTATION

R. Manzanarez
PROJECT ENGINEER

BRIDGE NO. 34-0006L/R
KILOMETER POST 13.2/13.9
CU 04
EA 0120F1

SAN FRANCISCO OAKLAND BAY BRIDGE
EAST SPAN SEISMIC SAFETY PROJECT
SELF-ANCHORED SUSPENSION BRIDGE
(SUPERSTRUCTURE & TOWER)

TOWER SPLICE DETAILS NO. 22

ORIGINAL SCALE IN MILLIMETERS FOR REDUCED PLANS 0 10 20 30 40 50 60 70 80 90 100

DISREGARD PRINTS BEARING EARLIER REVISION DATES

REVISION DATES (PRELIMINARY STAGE ONLY) 05/31/01 04/08/02 07/01/02 12/24/02 11/13/05

SHEET 144R1 OF

FILE => I:\bb\04-012001\sas\contract plans and cco\cco\cco#21\detsp22.dgn

USERNAME => ptom DATE PLOTTED => 23 APR 2007 TIME PLOTTED => 16:33:53

100 % PS&E

DIST.	COUNTY	ROUTE	KILOMETER POST TOTAL PROJECT	SHEET NO.	TOTAL SHEETS
04	SF	80	13.2/13.9	561S1	1204

REGISTERED ENGINEER - CIVIL

06-23-06
PLANS APPROVAL DATE

REGISTERED PROFESSIONAL ENGINEER Marwan N. Nader No. C 054426 Exp. 12/31/07 CIVIL STATE OF CALIFORNIA

The State of California or its officers or agents shall not be responsible for the accuracy or completeness of electronic copies of this plan sheet.

T.Y. LIN / MOFFATT & NICHOL
825 BATTERY STREET
SAN FRANCISCO, CA 94111

Caltrans now has a web site! To get to the web site, go to: http://www.dot.ca.gov

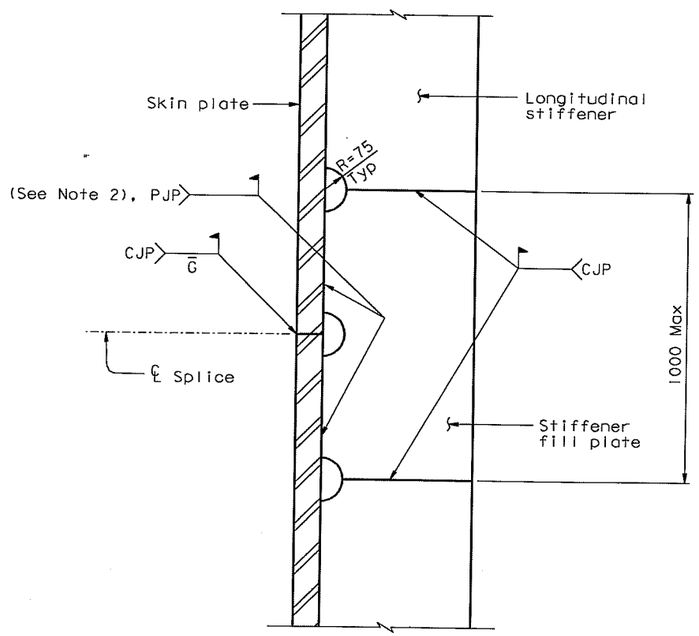

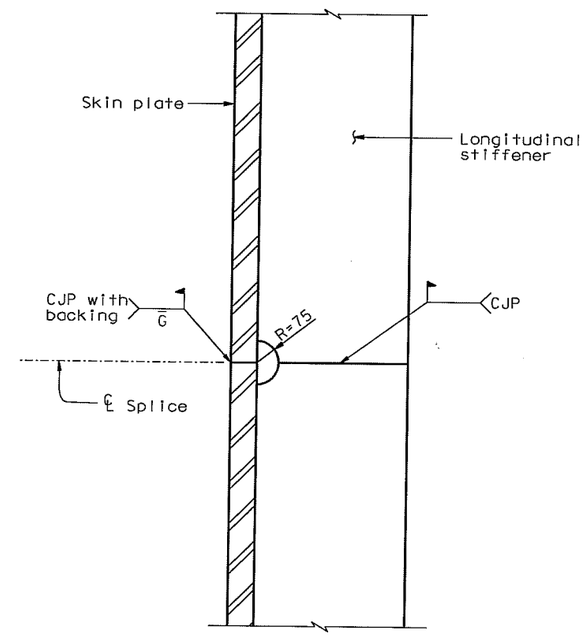

MARK	DATE	DESCRIPTIONS	BY	CH'D	CCO#
0	06/23/06	SPLICE PLATES PER ISM	MN	NV	21

REVISIONS

CONTRACT CHANGE ORDER NO. ____
SHEET ____ OF ____

OPTION A - WELD SKIN PLATE FROM BOTH SIDES

(For all splice elevations)

OPTION B - WELD SKIN PLATE FROM OUTSIDE ONLY

(For all splice elevations)

NOTES:

1. Details on this sheet are for illustration only. For skin plate thickness and stiffener width, see "Tower Shaft Details" sheets.
2. PJP weld shall be per Table I of "Tower Splice Details No.2" sheet.

ALL-WELDED DETAILS FOR TOWER SPLICE

NTS

ALL DIMENSIONS ARE IN MILLIMETERS UNLESS OTHERWISE SHOWN

R. Valizadeh/V. Toan/Y.L./W.L./F.C.
DESIGN OVERSIGHT
Roya Valizadeh / Vong Toan / Y. Liu
SIGN OFF DATE 06/23/06
Rev. Date: 5-18-98

	BY	CHECKED
DESIGN	M. Nader	N. Vo
DETAILS	N. Vo	G. Baker
QUANTITIES	N. Vo	G. Baker

PREPARED FOR THE STATE OF CALIFORNIA DEPARTMENT OF TRANSPORTATION

R. Manzanarez
PROJECT ENGINEER

BRIDGE NO. 34-0006L/R
KILOMETER POST 13.2/13.9

SAN FRANCISCO OAKLAND BAY BRIDGE
EAST SPAN SEISMIC SAFETY PROJECT
SELF-ANCHORED SUSPENSION BRIDGE
(SUPERSTRUCTURE & TOWER)

TOWER SPLICE DETAILS NO. 23

ORIGINAL SCALE IN MILLIMETERS FOR REDUCED PLANS 0 10 20 30 40 50 60 70 80 90 100

CU 04
EA 0120F1

DISREGARD PRINTS BEARING EARLIER REVISION DATES 06/23/06

REVISION DATES (PRELIMINARY STAGE ONLY)

SHEET 1445I OF

FILE => L:\BB\04-012001\SAS\Contract Plans and CCO\CCO\CCO#21\DGN\aetsp28s.dgn

USERNAME => vignatovs DATE PLOTTED => 22 MAY 2007 TIME PLOTTED => 09:18:54

DIST.	COUNTY	ROUTE	KILOMETER POST TOTAL PROJECT	SHEET NO.	TOTAL SHEETS
04	SF	80	13.2/13.9	570R1	1204

REGISTERED ENGINEER - CIVIL

12-6-04
PLANS APPROVAL DATE

REGISTERED PROFESSIONAL ENGINEER Marwan N. Nader No. C 054426 Exp. 12/31/07 CIVIL STATE OF CALIFORNIA

The State of California or its officers or agents shall not be responsible for the accuracy or completeness of electronic copies of this plan sheet.

T.Y. LIN / MOFFATT & NICHOL
825 BATTERY STREET
SAN FRANCISCO, CA 94111

Caltrans now has a web site! To get to the web site, go to: http://www.dot.ca.gov

Caltrans Metric

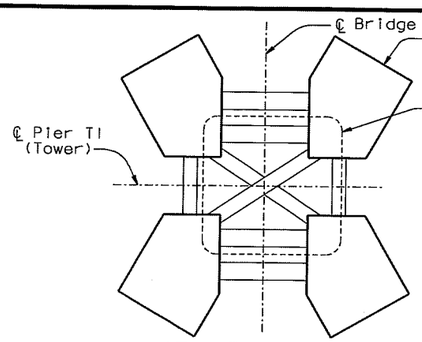

KEY PLAN VIEW
1:100

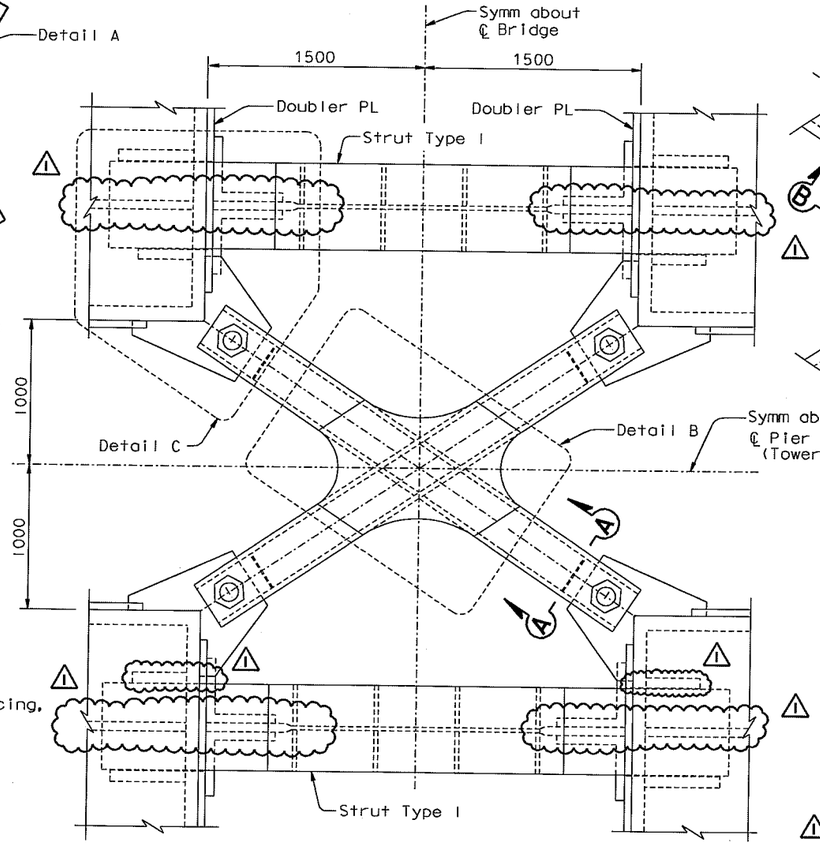

DETAIL A (see Note 1)

CROSS BRACING
1:20

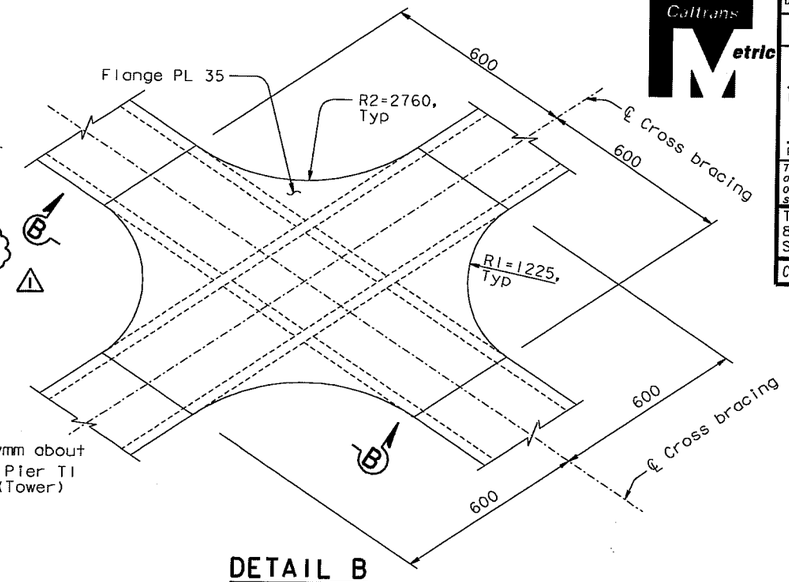

DETAIL B
1:10
(Dimensions of gusset plate are given parallel to ℄ of cross bracing)

TABLE 1

CROSS BRACING LOCATION	
Cross bracing	Elevation (m)
1	48.067
2	53.467
3	65.467
4	77.467
5	89.467
6	99.467
7	109.467
8	119.467

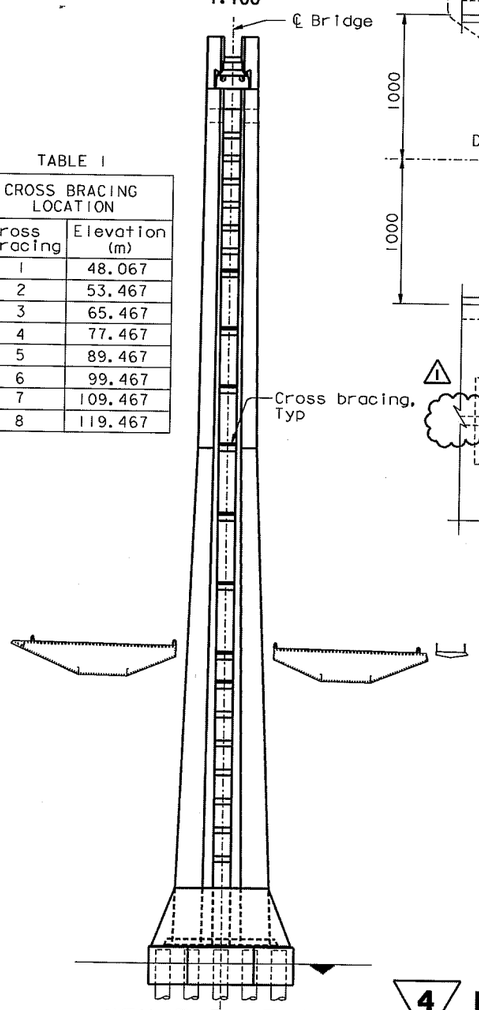

KEY ELEVATION
1:500

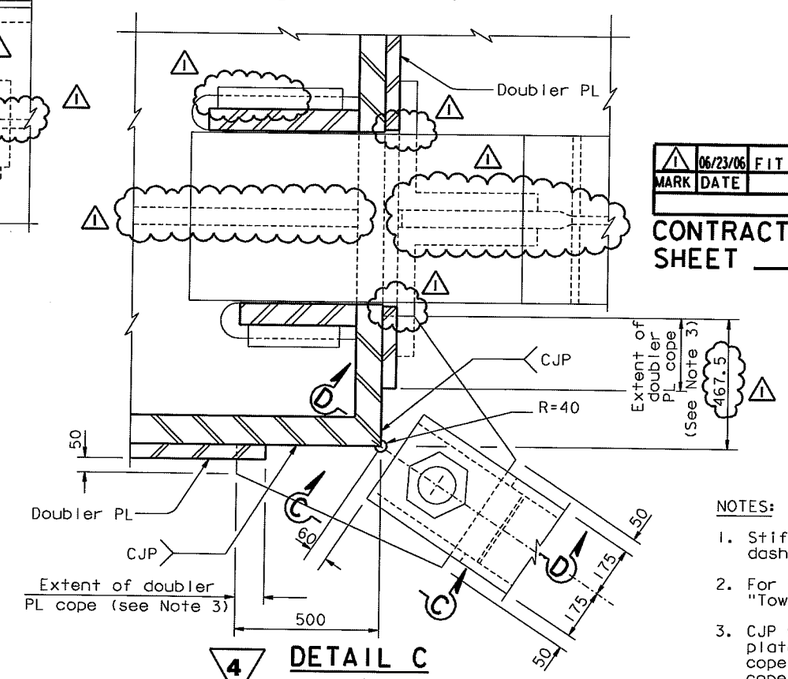

DETAIL C
1:10

MARK	DATE	DESCRIPTIONS	BY	CH'D	CCO#
1	06/23/06	FIT LUG & MISC.	MN	NV	21

REVISIONS

CONTRACT CHANGE ORDER NO. ____
SHEET ____ OF ____

NOTES:

1. Stiffeners inside tower shaft are shown in dashed line for clarity.
2. For Sections A-A, B-B, C-C and D-D, see "Tower Strut Details No. 10" sheet.
3. CJP weld shall be provided between gusset plate and tower skin plate and in between cope of doubler plate. For doubler plate cope details, see "Tower Shaft Details No. 11" sheet.

4 REVISED PER ADDENDUM NO. 4 DATED DECEMBER 9, 2005

ALL DIMENSIONS ARE IN MILLIMETERS UNLESS OTHERWISE SHOWN

R. Valizadeh/V. Toan/Y.L./W.L./F.C.
DESIGN OVERSIGHT
SIGN OFF DATE 06/23/06

	BY		CHECKED	
DESIGN	BY	M. Nader	CHECKED	S. Camo
DETAILS	BY	L. Rus	CHECKED	S. Camo
QUANTITIES	BY	L. Rus	CHECKED	Y. Zhang

PREPARED FOR THE STATE OF CALIFORNIA DEPARTMENT OF TRANSPORTATION

R. Manzanarez
PROJECT ENGINEER

BRIDGE NO. 34-0006L/R
KILOMETER POST 13.2/13.9

SAN FRANCISCO OAKLAND BAY BRIDGE
EAST SPAN SEISMIC SAFETY PROJECT
SELF-ANCHORED SUSPENSION BRIDGE
(SUPERSTRUCTURE & TOWER)

TOWER STRUT DETAILS NO. 9

Rev. Date: 5-18-98

ORIGINAL SCALE IN MILLIMETERS FOR REDUCED PLANS 0 10 20 30 40 50 60 70 80 90 100

CU 04
EA 0120F1

DISREGARD PRINTS BEARING EARLIER REVISION DATES

REVISION DATES (PRELIMINARY STAGE ONLY): 05/15/99 08/06/99 05/31/01 04/08/02 07/01/02 12/18/02 11/13/05

SHEET 153R1 OF

FILE => I:\bb\04-012001\sas\contract plans and cco\cco\cco#21\aetws09.dgn

USERNAME => prom DATE PLOTTED => 23 APR 2007 TIME PLOTTED => 16:36:06

100% PS&E

MARK	DATE	DESCRIPTIONS	BY	CH'D	CCO#
1	06/23/06	NOTE FOR WEB PLATE LINES	MN	NV	21

REVISIONS

CONTRACT CHANGE ORDER NO. ____
SHEET ____ OF ____

DIST.	COUNTY	ROUTE	KILOMETER POST TOTAL PROJECT	SHEET NO.	TOTAL SHEETS
04	SF	80	13.2/13.9	578R1	1204

REGISTERED ENGINEER - CIVIL

12-6-04
PLANS APPROVAL DATE

The State of California or its officers or agents shall not be responsible for the accuracy or completeness of electronic copies of this plan sheet.

REGISTERED PROFESSIONAL ENGINEER Marwan N. Nader No. C 054426 Exp. 12/31/07 CIVIL STATE OF CALIFORNIA

T.Y. LIN / MOFFATT & NICHOL
825 BATTERY STREET
SAN FRANCISCO, CA 94111

To get to the web site, go to: http://www.dot.ca.gov

4 REVISED PER ADDENDUM NO. 4 DATED DECEMBER 9, 2005

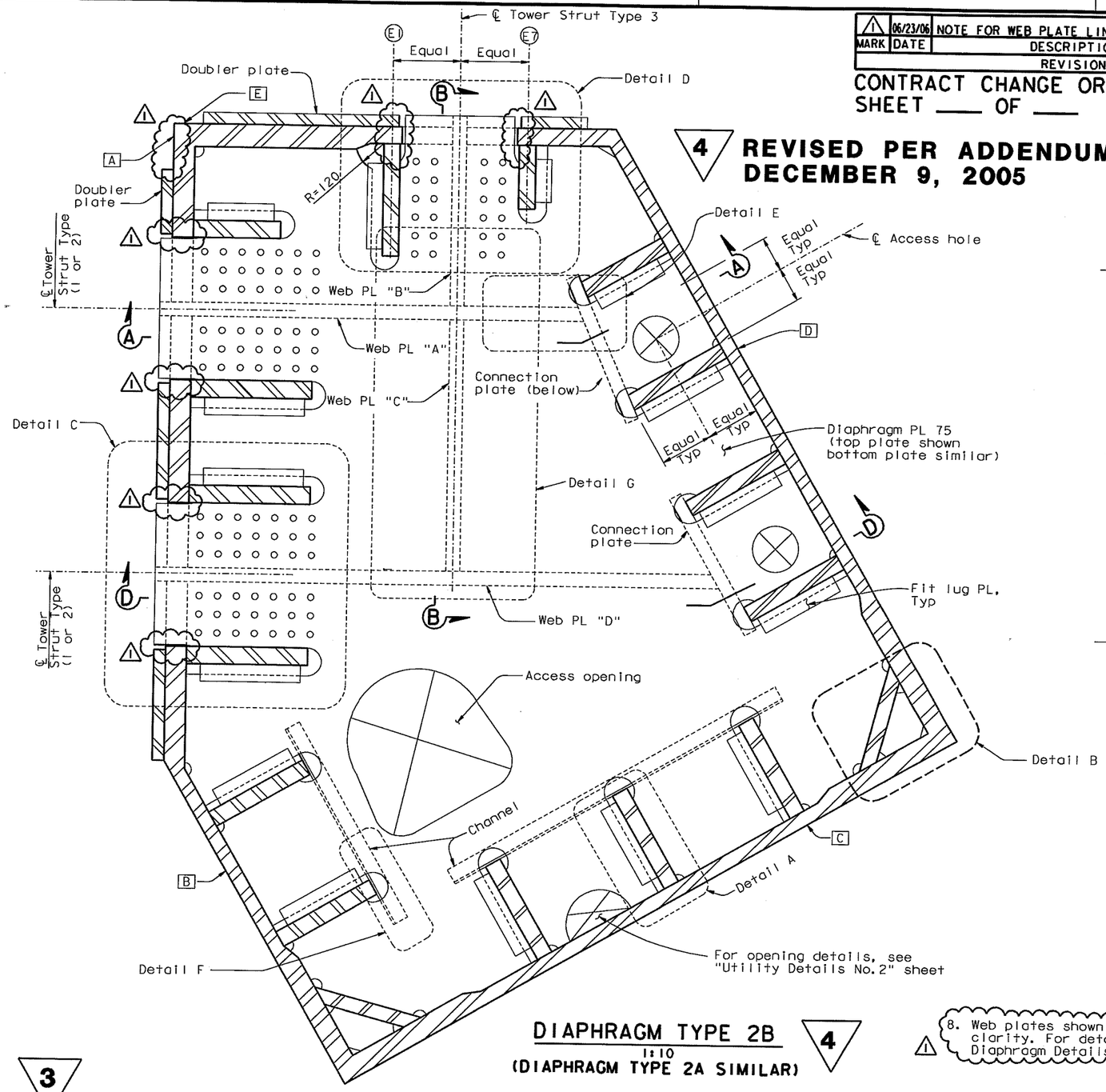

DIAPHRAGM TYPE 2B
1:10
(DIAPHRAGM TYPE 2A SIMILAR)

4

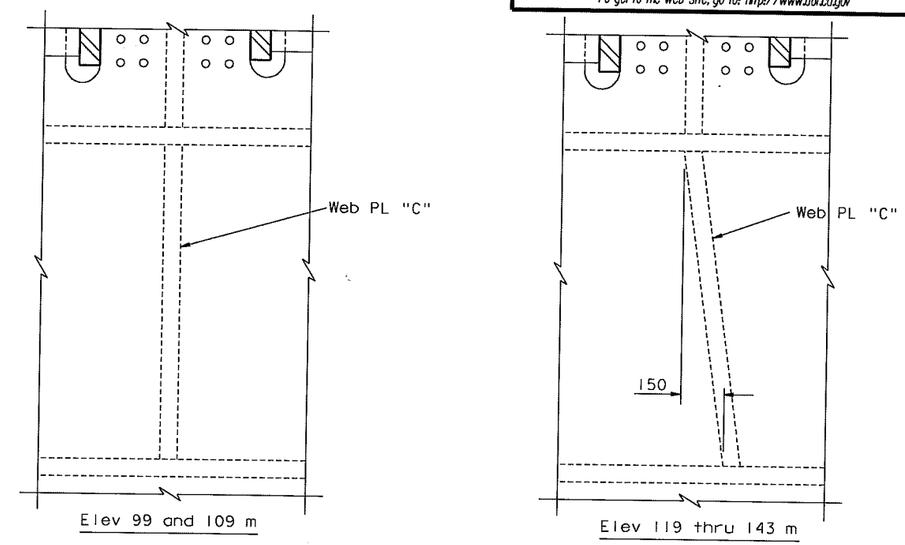

LAYOUT OF WEB PL "C"

DETAIL G
1:10

LEGEND:

E Skin Plate Designation

⊗ Access hole 200 Dia

NOTES:

1. For Details A and B, see "Tower Diaphragm Details No. 6" sheet.
2. For Details C and D, see "Tower Diaphragm Details No. 7" sheet.
3. For Details E and F, see "Tower Diaphragm Details No. 12" sheet.
4. For Sections A-A and B-B, see "Tower Diaphragm Details No. 8" sheet.
5. For location and details of tower access, see "Tower Access Details" sheets.
6. For utilities inside tower shaft, see "Road Plans".
7. For Section D-D, see "Tower Diaphragm Details No. 10" sheet.

3

8. Web plates shown in dashed lines for clarity. For details, see "Tower Diaphragm Details No. 8" sheet.

3 REVISED PER ADDENDUM NO. 3 DATED NOVEMBER 7, 2005

ALL DIMENSIONS ARE IN MILLIMETERS UNLESS OTHERWISE SHOWN

R. Valizadeh/V. Toan/Y.L./W.L./F.C.
DESIGN OVERSIGHT
Roza Valizadeh / Vong Toan / Y. Liu
SIGN OFF DATE 06/23/06
Rev. Date: 5-18-98

	BY	CHECKED
DESIGN	M. Nader	M. Gulyas
DETAILS	L. Rus	M. Gulyas
QUANTITIES	L. Rus	Y. Zhang

PREPARED FOR THE STATE OF CALIFORNIA DEPARTMENT OF TRANSPORTATION

R. Manzanarez
PROJECT ENGINEER

BRIDGE NO. 34-0006L/R
KILOMETER POST 13.2/13.9

SAN FRANCISCO OAKLAND BAY BRIDGE
EAST SPAN SEISMIC SAFETY PROJECT
SELF-ANCHORED SUSPENSION BRIDGE
(SUPERSTRUCTURE & TOWER)

TOWER DIAPHRAGM DETAILS NO. 3

ORIGINAL SCALE IN MILLIMETERS FOR REDUCED PLANS 0 10 20 30 40 50 60 70 80 90 100

CU 04
EA 0120F1

DISREGARD PRINTS BEARING EARLIER REVISION DATES

REVISION DATES (PRELIMINARY STAGE ONLY) 01/16/99 05/15/99 08/02/99 05/31/01 04/08/02 07/01/02 12/19/02 10/13/05 11/13/05

SHEET 161R1 OF

FILE => I:\bb\04-012001\sas\contract plans and cco\cco\cco#21\aetdh03.dgn

100 % PS&E

USERNAME => ptom DATE PLOTTED => 23 APR 2007 TIME PLOTTED => 16:38:03

DIST.	COUNTY	ROUTE	KILOMETER POST TOTAL PROJECT	SHEET NO.	TOTAL SHEETS
04	SF	80	13.2/13.9	579R1	1204

REGISTERED ENGINEER - CIVIL

12-6-04

PLANS APPROVAL DATE

The State of California or its officers or agents shall not be responsible for the accuracy or completeness of electronic copies of this plan sheet.

REGISTERED PROFESSIONAL ENGINEER Marwan N. Nader No. C 054426 Exp. 12/31/07 CIVIL STATE OF CALIFORNIA

T.Y. LIN / MOFFATT & NICHOL
825 BATTERY STREET
SAN FRANCISCO, CA 94111

To get to the web site, go to: http://www.dot.ca.gov

MARK	DATE	DESCRIPTIONS	BY	CH'D	CCO#
1	06/23/06	NOTE FOR WEB PLATE LINES	MN	NV	21

REVISIONS

CONTRACT CHANGE ORDER NO. ____
SHEET ____ OF ____

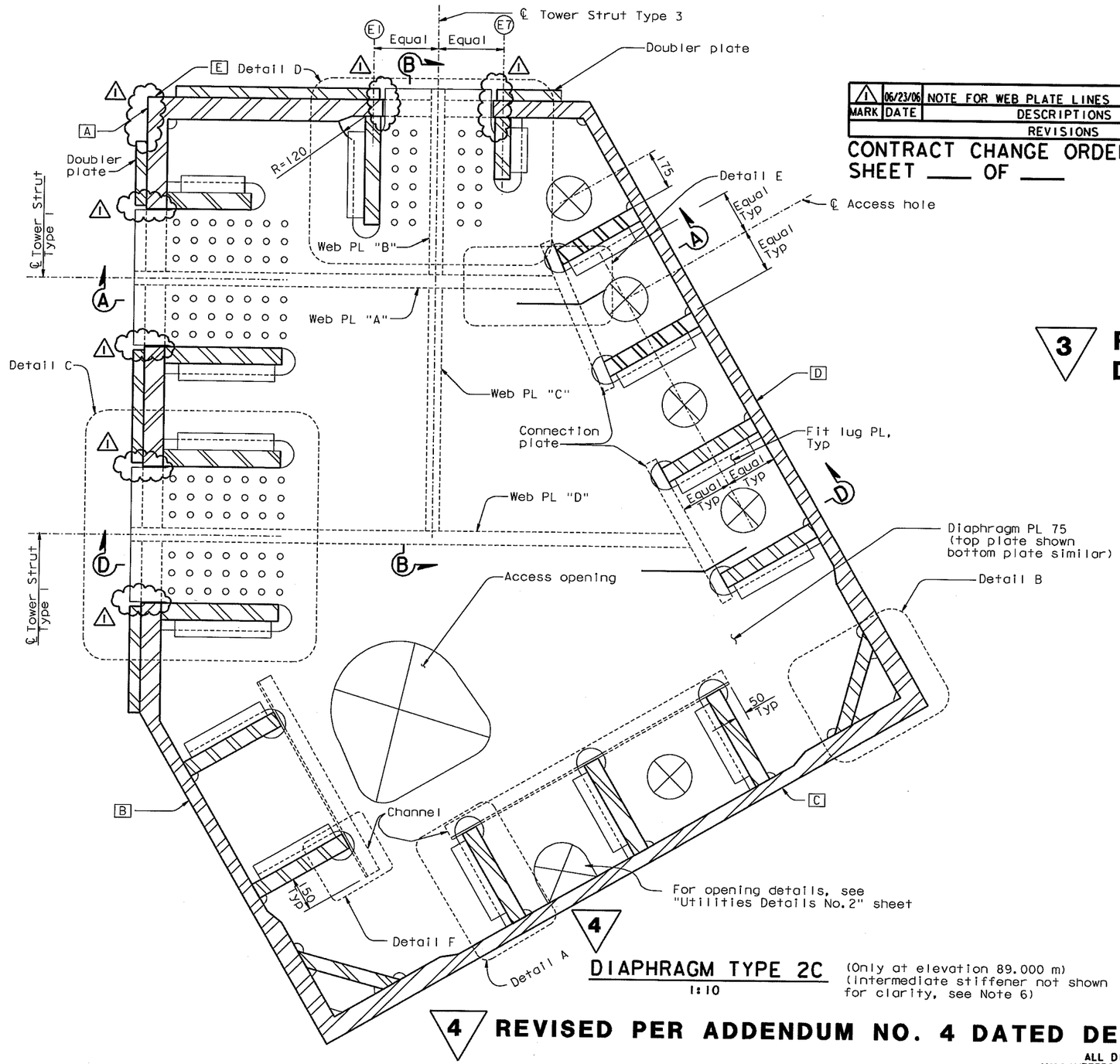

DIAPHRAGM TYPE 2C
1:10

(Only at elevation 89.000 m)
(Intermediate stiffener not shown for clarity, see Note 6)

3 REVISED PER ADDENDUM NO. 3 DATED NOVEMBER 7, 2005

LEGEND:

E Skin Plate Designation

⊗ Access hole 200 Dia

NOTES:

1. For Details A and B, see "Tower Diaphragm Details No.6" sheet.
2. For Details C and D, see "Tower Diaphragm Details No.7" sheet.
3. For Details E and F, see "Tower Diaphragm Details No.12" sheet.
4. For Sections A-A and B-B, see "Tower Diaphragm Details No.8" sheet.
5. For location and details of tower access, see "Tower Access Details" sheets.
6. 3 For intermediate stiffener details, see "Tower Diaphragm Details No.12" sheet.
7. For utilities inside tower shaft, see "Road Plans".
8. 3 For Section D-D, see "Tower Diaphragm Details No.10" sheet.
9. 1 Web plates shown in dashed lines for clarity. For details, see "Tower Diaphragm Details No.8" sheet.

4 REVISED PER ADDENDUM NO. 4 DATED DECEMBER 9, 2005

ALL DIMENSIONS ARE IN MILLIMETERS UNLESS OTHERWISE SHOWN

R. Valizadeh/V. Toan/Y.L./W.L./F.C.
DESIGN OVERSIGHT
Roger Valizadeh / Vong Toan / Y. Liu
SIGN OFF DATE 06/23/06
Rev. Date: 5-18-98

	BY	CHECKED
DESIGN	M. Nader	M. Gulyas
DETAILS	L. Rus	M. Gulyas
QUANTITIES	L. Rus	Y. Zhang

PREPARED FOR THE STATE OF CALIFORNIA DEPARTMENT OF TRANSPORTATION

R. Manzanarez
PROJECT ENGINEER

BRIDGE NO. 34-0006L/R
KILOMETER POST 13.2/13.9

SAN FRANCISCO OAKLAND BAY BRIDGE
EAST SPAN SEISMIC SAFETY PROJECT
SELF-ANCHORED SUSPENSION BRIDGE
(SUPERSTRUCTURE & TOWER)

TOWER DIAPHRAGM DETAILS NO. 4

ORIGINAL SCALE IN MILLIMETERS FOR REDUCED PLANS 0 10 20 30 40 50 60 70 80 90 100

CU 04
EA 0120F1

DISREGARD PRINTS BEARING EARLIER REVISION DATES

REVISION DATES (PRELIMINARY STAGE ONLY) 08/02/99 05/31/01 04/08/02 07/01/02 12/19/02 10/13/05 11/13/05

SHEET 162R1 OF

FILE => I:\bb\04-012001\sas\contract plans and cco\cco\cco#21\aetdh04.dgn

100 % PS&E

USERNAME => ptom DATE PLOTTED => 23 APR 2007 TIME PLOTTED => 16:39:22

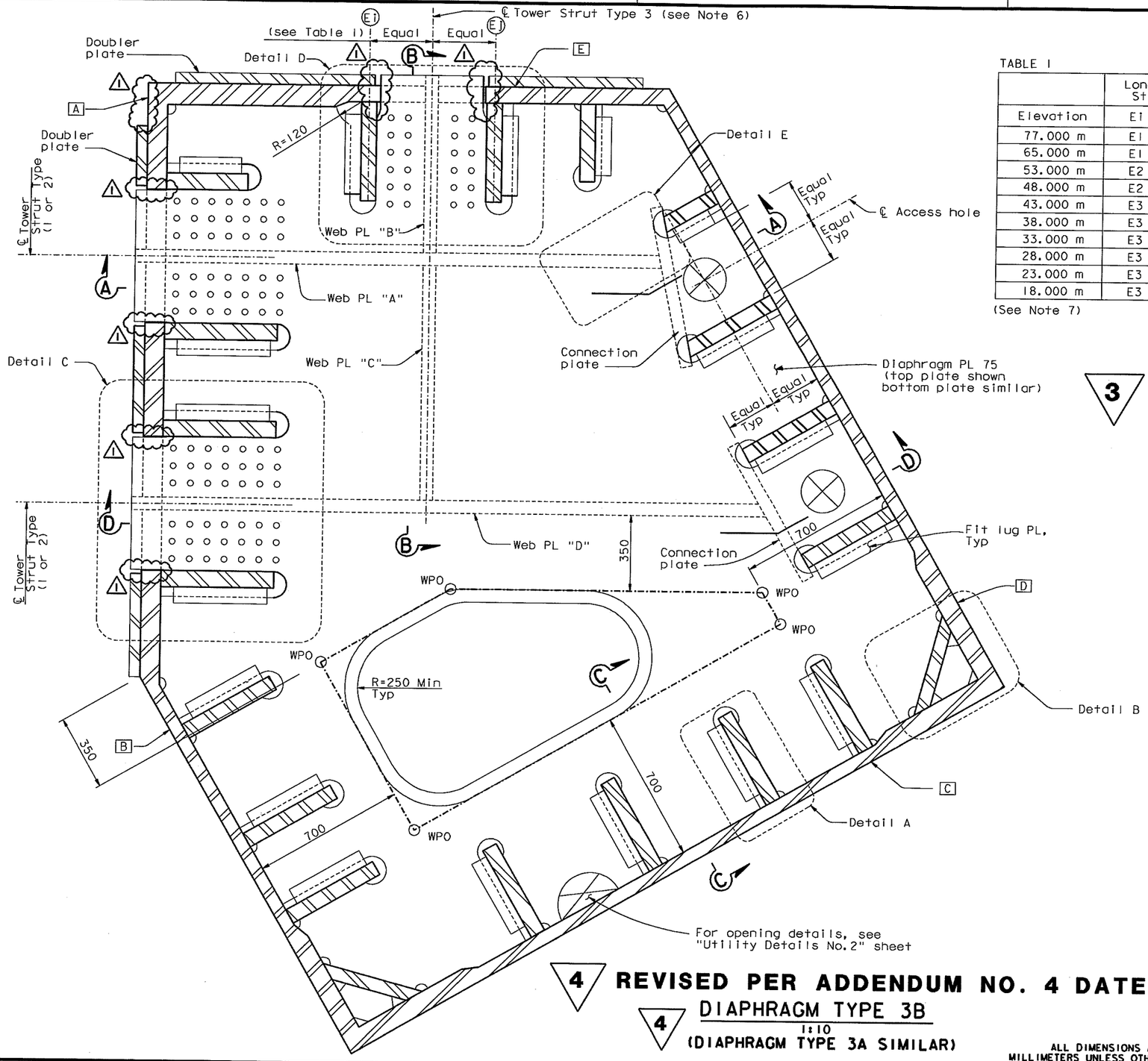

TABLE 1

Elevation	Longitudinal Stiffener Ei	Longitudinal Stiffener Ej
77.000 m	E1	E2
65.000 m	E1	E2
53.000 m	E2	E3
48.000 m	E2	E3
43.000 m	E3	E4
38.000 m	E3	E4
33.000 m	E3	E4
28.000 m	E3	E4
23.000 m	E3	E4
18.000 m	E3	E4

(See Note 7)

DIST.	COUNTY	ROUTE	KILOMETER POST TOTAL PROJECT	SHEET NO.	TOTAL SHEETS
04	SF	80	13.2/13.9	580R1	1204

Caltrans Metric

REGISTERED ENGINEER - CIVIL

12-6-04

PLANS APPROVAL DATE

REGISTERED PROFESSIONAL ENGINEER Marwan N. Nader No. C 054426 Exp. 12/31/07 CIVIL STATE OF CALIFORNIA

The State of California or its officers or agents shall not be responsible for the accuracy or completeness of electronic copies of this plan sheet.

T.Y. LIN / MOFFATT & NICHOL
825 BATTERY STREET
SAN FRANCISCO, CA 94111

To get to the web site, go to: http://www.dot.ca.gov

MARK	DATE	DESCRIPTIONS	BY	CH'D	CCO#
1	06/23/06	NOTE FOR WEB PLATE LINES	MN	NV	21

REVISIONS

CONTRACT CHANGE ORDER NO. ____
SHEET ____ OF ____

3 **REVISED PER ADDENDUM NO. 3 DATED NOVEMBER 7, 2005**

LEGEND:

- E — Skin Plate Designation
- WPO — Geometric working point for diaphragm opening
- Working lines for diaphragm opening
- Access hole 200 Dia

NOTES:

1. For Details A and B, see "Tower Diaphragm Details No.6" sheet.
2. For Details C and D, see "Tower Diaphragm Details No.7" sheet.
3. For Detail E, see "Tower Diaphragm Details No.12" sheet. (3)
4. For Sections A-A, B-B and C-C see "Tower Diaphragm Details No.8" sheet.
5. For location and details of tower access, see "Tower Access Details" sheets.
6. For location of tower strut type 3, see "Tower Shaft Details No.7" and "Tower Strut Details No.1" sheets.
7. For utilities inside tower shaft, see "Road Plans".
8. For Section D-D, see "Tower Diaphragm Details No.10" sheet. (3)
9. Web plates shown in dashed lines for clarity. For details, see "Tower Diaphragm Details No.8" sheet. (1)

4 **REVISED PER ADDENDUM NO. 4 DATED DECEMBER 9, 2005**

4 DIAPHRAGM TYPE 3B
1:10
(DIAPHRAGM TYPE 3A SIMILAR)

ALL DIMENSIONS ARE IN MILLIMETERS UNLESS OTHERWISE SHOWN

100 % PS&E

R. Valizadeh/V. Toan/Y.L./W.L./F.C.
DESIGN OVERSIGHT
Roger Valizadeh / Vong Toan / Y. Liu
SIGN OFF DATE 06/23/06
Rev. Date: 5-18-98

	BY	CHECKED
DESIGN	M. Nader	M. Gulyas
DETAILS	L. Rus	M. Gulyas
QUANTITIES	L. Rus	Y. Zhang

PREPARED FOR THE STATE OF CALIFORNIA DEPARTMENT OF TRANSPORTATION

R. Manzanarez
PROJECT ENGINEER

BRIDGE NO. 34-0006L/R
KILOMETER POST 13.2/13.9

SAN FRANCISCO OAKLAND BAY BRIDGE
EAST SPAN SEISMIC SAFETY PROJECT
SELF-ANCHORED SUSPENSION BRIDGE
(SUPERSTRUCTURE & TOWER)

TOWER DIAPHRAGM DETAILS NO.5

ORIGINAL SCALE IN MILLIMETERS FOR REDUCED PLANS 0 10 20 30 40 50 60 70 80 90 100

CU 04
EA 0120F1

DISREGARD PRINTS BEARING EARLIER REVISION DATES

REVISION DATES (PRELIMINARY STAGE ONLY) 08/02/99 05/31/01 04/08/02 07/01/02 12/19/02 10/13/05 11/13/05

SHEET 163R1 OF

FILE => I:\bb\04-012001\sas\contract plans and cco\cco\cco#21\aetdh05.dgn

USERNAME => ptom DATE PLOTTED => 23 APR 2007 TIME PLOTTED => 16:41:08

DIST.	COUNTY	ROUTE	KILOMETER POST TOTAL PROJECT	SHEET NO.	TOTAL SHEETS
04	SF	80	13.2/13.9	581R1	1204

REGISTERED ENGINEER - CIVIL

12-6-04
PLANS APPROVAL DATE

REGISTERED PROFESSIONAL ENGINEER Marwan N. Nader No. C 054426 Exp. 12/31/07 CIVIL STATE OF CALIFORNIA

The State of California or its officers or agents shall not be responsible for the accuracy or completeness of electronic copies of this plan sheet.

T.Y. LIN / MOFFATT & NICHOL
825 BATTERY STREET
SAN FRANCISCO, CA 94111

To get to the web site, go to: http://www.dot.ca.gov

4

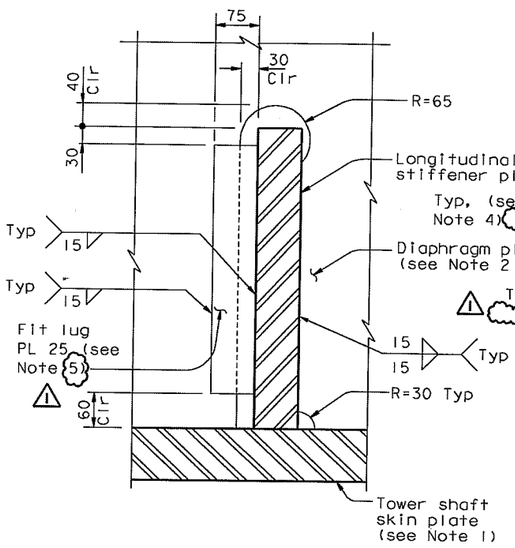

TYPICAL COPE DETAILS
(Unless noted otherwise)

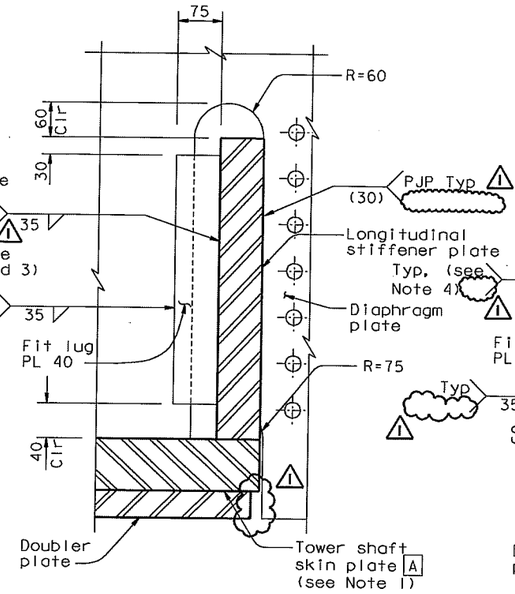

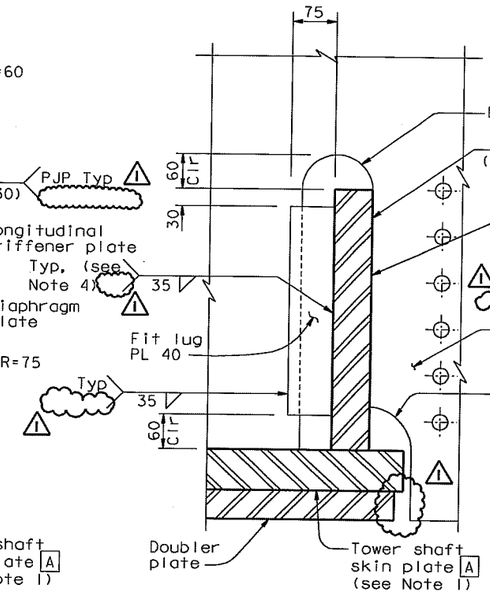

COPE DETAILS AT TOWER STRUT TYPES 1 AND 2
DETAIL A (See Note 1)
1:5

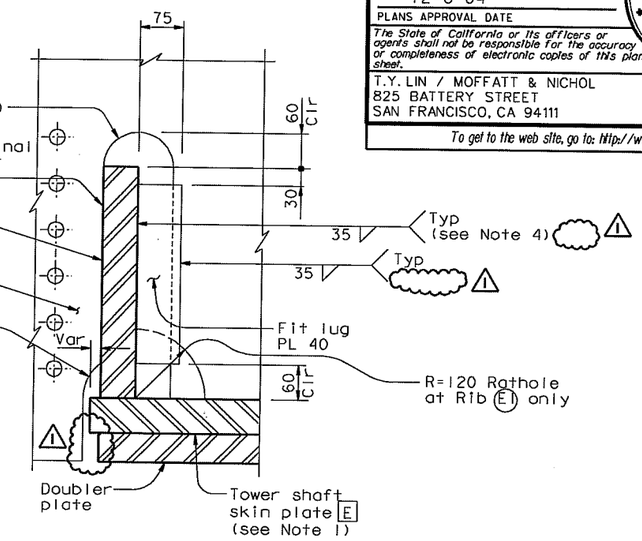

COPE DETAILS AT TOWER STRUT TYPE 3

4 **REVISED PER ADDENDUM NO. 4 DATED DECEMBER 9, 2005**

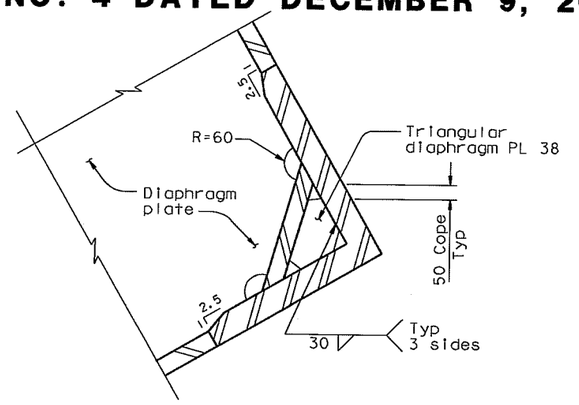

DETAIL B
1:10

3 **REVISED PER ADDENDUM NO. 3 DATED NOVEMBER 7, 2005**

DIAPHRAGM COPE DETAILS

MARK	DATE	DESCRIPTIONS	BY	CH'D	CCO#
1	06/23/06	DELETE OVERMATCHING METAL NOTE	MN	NV	21

REVISIONS

CONTRACT CHANGE ORDER NO. ____
SHEET ____ OF ____

NOTES:

1. For details of skin plate and longitudinal stiffeners, see "Tower Shaft Details" sheets.
2. For diaphragm plate thickness, see "Tower Diaphragm Details No.2" through "Tower Diaphragm Details No.5" sheets. For diaphragm plate thickness at elevations 9.000 and 13.000, see "Tower Diaphragm Details No.14" sheet.
3. For diaphragm to tower shaft skin plate weld size, see "Tower Diaphragm Details No.11" sheet.
4. An equivalent PJP weld is also an acceptable alternative.
5. Fit lugs are not installed on diaphragm types 1A and 1B.

ALL DIMENSIONS ARE IN MILLIMETERS UNLESS OTHERWISE SHOWN

R. Vallizadeh/V. Toan/Y.L./W.L./F.C.
DESIGN OVERSIGHT
SIGN OFF DATE 06/23/06

	BY	CHECKED
DESIGN	M. Nader	M. Gulyas
DETAILS	L. Rus	M. Gulyas
QUANTITIES	L. Rus	Y. Zhang

PREPARED FOR THE STATE OF CALIFORNIA DEPARTMENT OF TRANSPORTATION

R. Manzanarez
PROJECT ENGINEER

BRIDGE NO. 34-0006L/R
KILOMETER POST 13.2/13.9

SAN FRANCISCO OAKLAND BAY BRIDGE
EAST SPAN SEISMIC SAFETY PROJECT
SELF-ANCHORED SUSPENSION BRIDGE
(SUPERSTRUCTURE & TOWER)

TOWER DIAPHRAGM DETAILS NO.6

Rev. Date: 5-18-98

ORIGINAL SCALE IN MILLIMETERS FOR REDUCED PLANS 0 10 20 30 40 50 60 70 80 90 100

CU 04
EA 0120F1

DISREGARD PRINTS BEARING EARLIER REVISION DATES

REVISION DATES (PRELIMINARY STAGE ONLY) 05/31/01 04/08/02 07/01/02 12/13/02 10/13/05 11/13/05

SHEET 164R1 OF

FILE => I:\bb\04-012001\sas\contract plans and cco\cco\cco#21\detdh06.dgn

USERNAME => prom DATE PLOTTED => 23 APR 2007 TIME PLOTTED => 16:42:10

100 % PS&E

DIST.	COUNTY	ROUTE	KILOMETER POST TOTAL PROJECT	SHEET NO.	TOTAL SHEETS
04	SF	80	13.2/13.9	583R1	1204

REGISTERED ENGINEER - CIVIL

12-6-04

PLANS APPROVAL DATE

REGISTERED PROFESSIONAL ENGINEER Marwan N. Nader No. C 054426 Exp. 12/31/07 CIVIL STATE OF CALIFORNIA

The State of California or its officers or agents shall not be responsible for the accuracy or completeness of electronic copies of this plan sheet.

T.Y. LIN / MOFFATT & NICHOL
825 BATTERY STREET
SAN FRANCISCO, CA 94111

To get to the web site, go to: http://www.dot.ca.gov

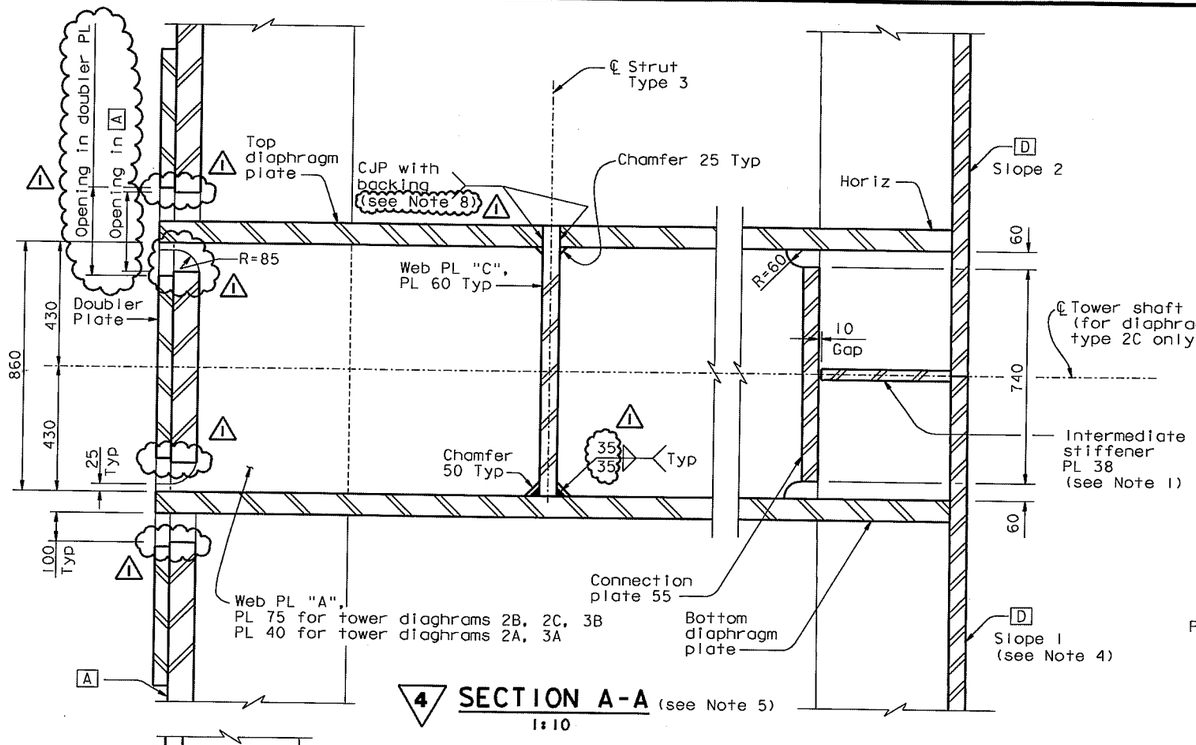

4 **SECTION A-A** (see Note 5)
1:10

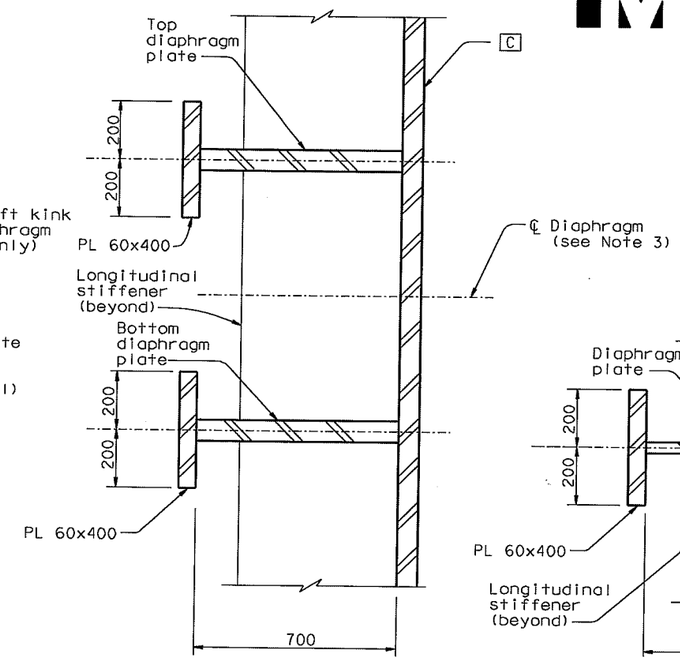

TYPE 3A AND 3B

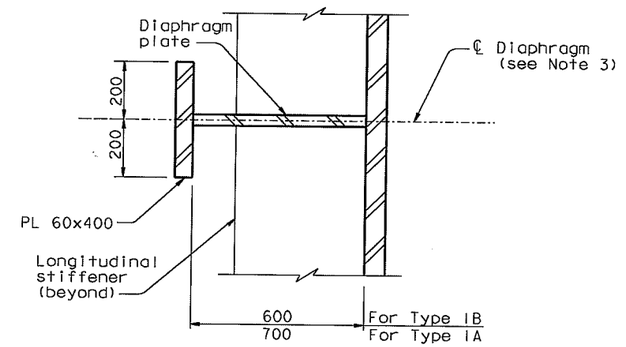

TYPE 1A AND 1B

SECTION C-C (Note: Fit lug plate not shown for clarity)
1:10

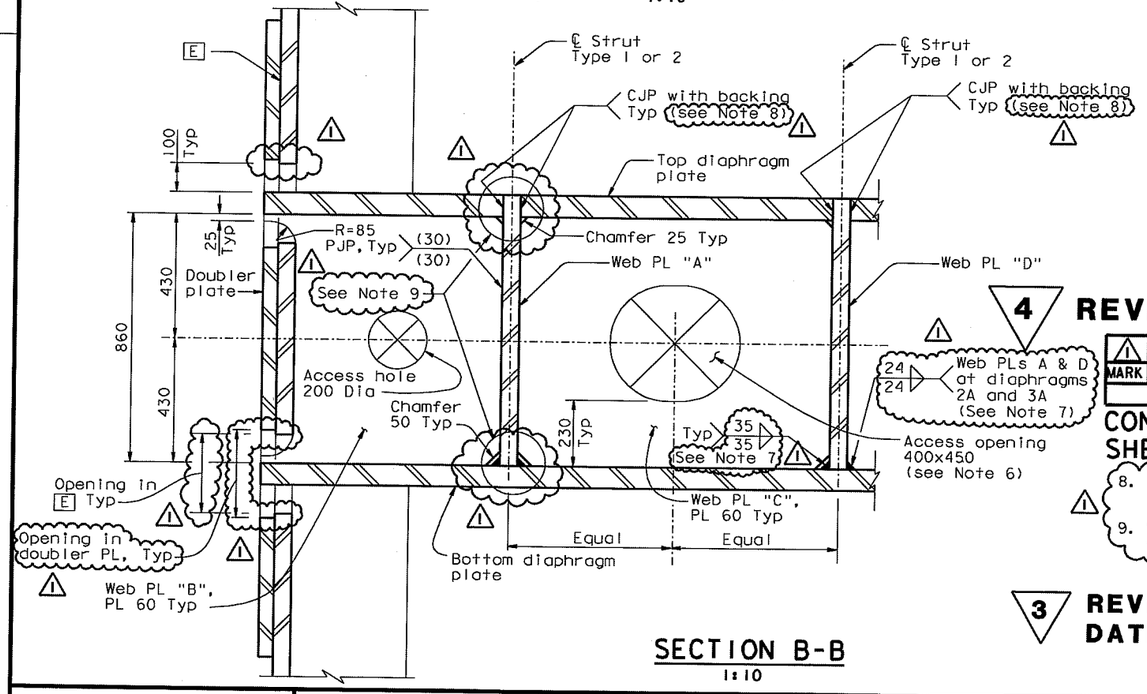

SECTION B-B
1:10

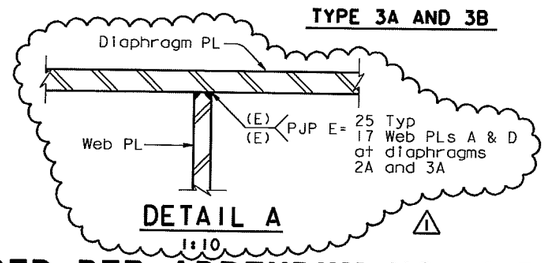

DETAIL A
1:10

LEGEND:

E Skin Plate Designation

⊕ M27 A490-X HS Bolts

4 **REVISED PER ADDENDUM NO. 4 DATED DECEMBER 9, 2005**

MARK	DATE	DESCRIPTIONS	BY	CH'D	CCO#
1	06/23/06	WEB PL TO DIAPHRAGM PL WELD	MN	NV	21

REVISIONS

CONTRACT CHANGE ORDER NO. ____
SHEET ___ OF ___

NOTES:

4 1. Intermediate stiffener plate only for diaphragm type 2C. For stiffener plate layout and details, see "Tower Diaphragm Details No. 12" sheet.

2. Tower strut flange splice is not shown for clarity.

3. For diaphragm locations, see "Tower Diaphragm Details No. 1" sheet.

4. For tower skin plate slope, see "Tower Shaft Details No. 5" and "Tower Shaft Details No. 6" sheets.

3 5. For inspection and access openings in web plate "A", see "Tower Diaphragm Details No. 9" sheet.

3 6. For access opening, see Detail B on "Tower Diaphragm Details No. 10" sheet.

1 7. An equivalent PJP weld is an acceptable alternative.

1 8. For alternate web plate to diaphragm plate weld, see Detail A.

9. Weld joint details shown at top and at bottom of web plate are interchangeable for all web plates.

3 **REVISED PER ADDENDUM NO. 3 DATED NOVEMBER 7, 2005**

ALL DIMENSIONS ARE IN MILLIMETERS UNLESS OTHERWISE SHOWN

100 % PS&E

DATE PLOTTED => 23 APR 2007 TIME PLOTTED => 16:43:13

USERNAME => ptcm

R. Valizadeh/V. Toan/Y. L./W. L./F. C.
DESIGN OVERSIGHT
SIGN OFF DATE 06/23/06
Rev. Date: 5-18-98

	BY	CHECKED
DESIGN	M. Nader	M. Gulyas
DETAILS	L. Rus	M. Gulyas
QUANTITIES	L. Rus	Y. Zhang

PREPARED FOR THE STATE OF CALIFORNIA DEPARTMENT OF TRANSPORTATION

R. Manzanarez
PROJECT ENGINEER

BRIDGE NO. 34-0006L/R
KILOMETER POST 13.2/13.9

SAN FRANCISCO OAKLAND BAY BRIDGE
EAST SPAN SEISMIC SAFETY PROJECT
SELF-ANCHORED SUSPENSION BRIDGE
(SUPERSTRUCTURE & TOWER)

TOWER DIAPHRAGM DETAILS NO. 8

ORIGINAL SCALE IN MILLIMETERS FOR REDUCED PLANS 0 10 20 30 40 50 60 70 80 90 100

CU 04
EA 0120F1

DISREGARD PRINTS BEARING EARLIER REVISION DATES

REVISION DATES (PRELIMINARY STAGE ONLY) 05/31/01 04/08/02 07/31/02 12/13/02 10/13/05 11/13/05

SHEET 166R1 OF

FILE => I:\bb\04-012001\sas\contract plans and cco\cco\cco#21\detdh08.dgn

DIST.	COUNTY	ROUTE	KILOMETER POST TOTAL PROJECT	SHEET NO.	TOTAL SHEETS
04	SF	80	13.2/13.9	584R1	1204

REGISTERED ENGINEER - CIVIL

12-6-04
PLANS APPROVAL DATE

REGISTERED PROFESSIONAL ENGINEER Marwan N. Nader No. C 054426 Exp. 12/31/07 CIVIL STATE OF CALIFORNIA

The State of California or its officers or agents shall not be responsible for the accuracy or completeness of electronic copies of this plan sheet.

T.Y. LIN / MOFFATT & NICHOL
825 BATTERY STREET
SAN FRANCISCO, CA 94111

To get to the web site, go to: http://www.dot.ca.gov

Caltrans Metric

4

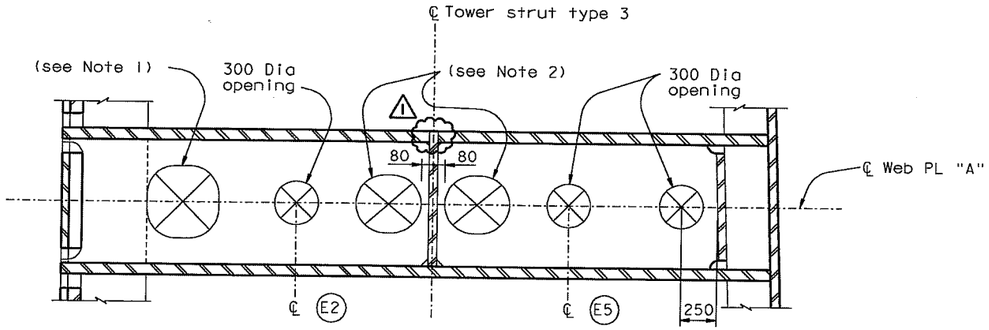

Elev 18 m

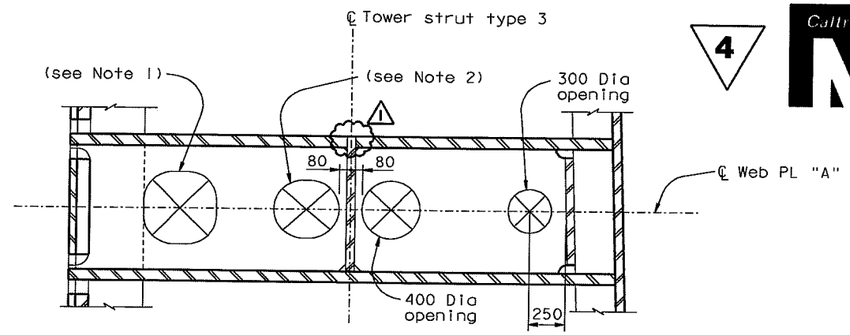

Elev 47.6 m shown
Elev 53 m similar

MARK	DATE	DESCRIPTIONS	BY	CH'D	CCO#
1	06/23/06	WEB PLATE THRU DIAPHRAGM PLATE	MN	NV	21

REVISIONS

CONTRACT CHANGE ORDER NO. ____
SHEET ____ OF ____

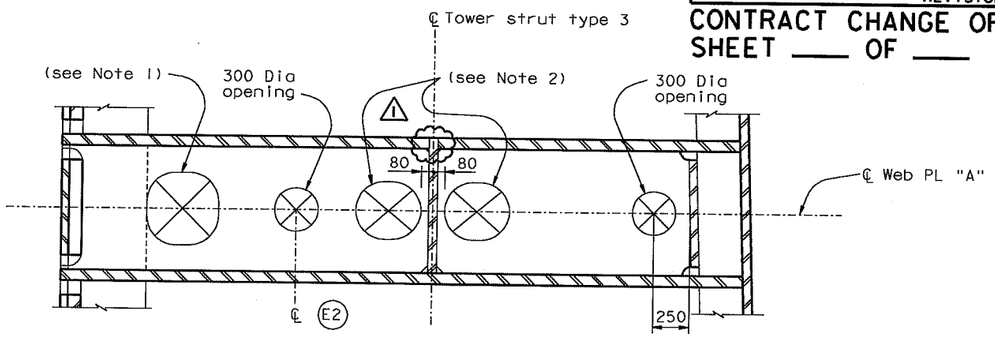

Elev 23 m shown
Elev 28 and 33 m similar

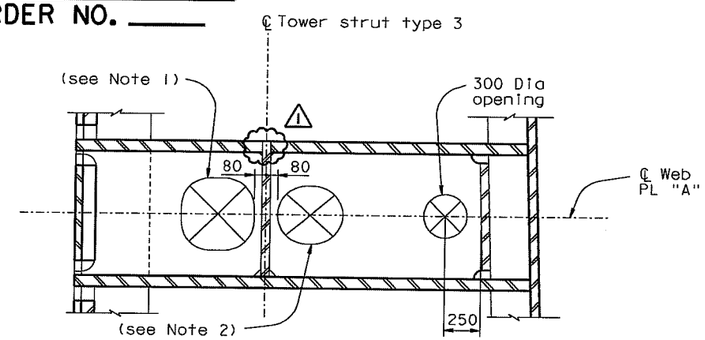

Elev 65 m

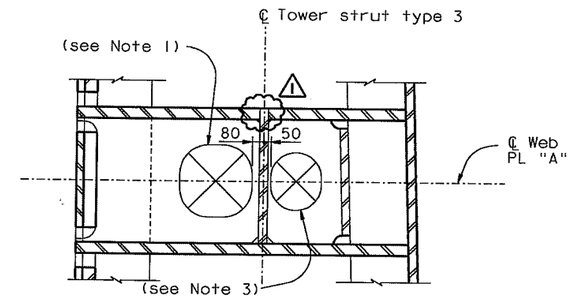

Elev 89 m shown
Elev 99, 109 & 119 m similar

4 REVISED PER ADDENDUM NO. 4 DATED DECEMBER 9, 2005

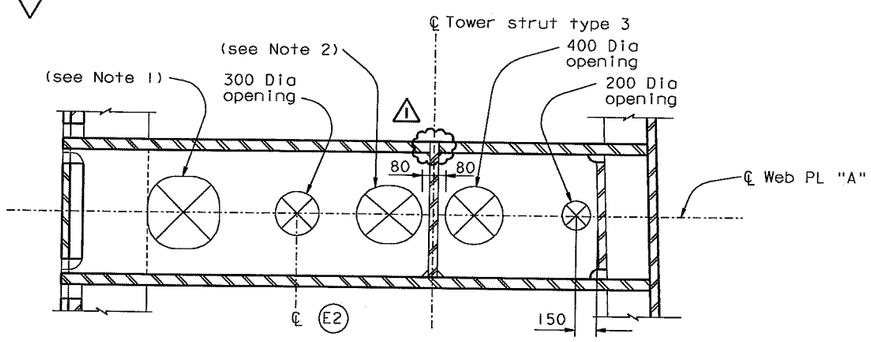

Elev 43 m shown
Elev 38 m similar

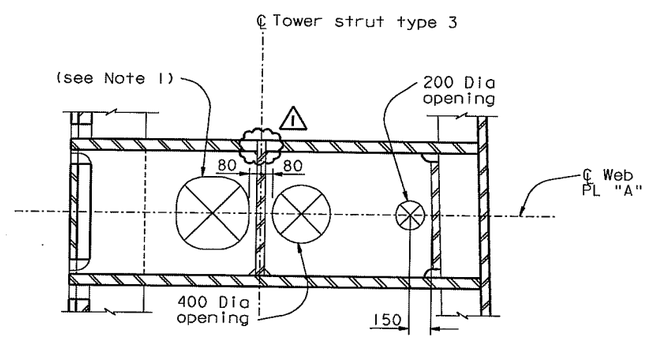

Elev 77 m

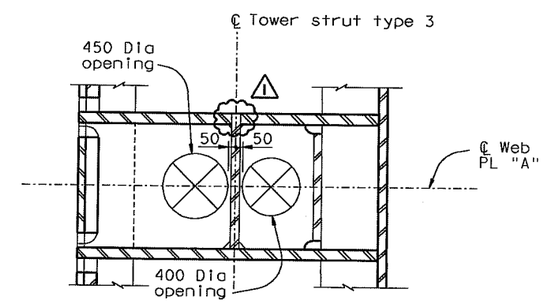

Elev 123 m shown
Elev 127, 131, 135, 139 & 143 m similar

LEGEND:
E2 Tower rib E2
⊗ Access opening

NOTES:

3 1. Access opening is 500x500. See Detail A on "Tower Diaphragm Details No. 10" sheet.

3 2. Access opening is 400x450. See Detail B on "Tower Diaphragm Details No. 10" sheet.

3 3. Access opening is 350x450. See Detail C on "Tower Diaphragm Details No. 10" sheet.

3 REVISED PER ADDENDUM NO. 3 DATED NOVEMBER 7, 2005

SECTION A-A (Web PL "A" access openings)
1:20

ALL DIMENSIONS ARE IN MILLIMETERS UNLESS OTHERWISE SHOWN

100 % PS&E

DATE PLOTTED => 23 APR 2007 TIME PLOTTED => 16:44:25

USERNAME => ptom

R. Valizadeh/V. Toan/Y.L./W.L./F.C.
DESIGN OVERSIGHT
Roya Valizadeh / Vong Toan / Y. Liu
SIGN OFF DATE 06/23/06
Rev. Date: 5-18-98

	BY	CHECKED
DESIGN	M. Nader	J. Duxbury
DETAILS	G. Baker	J. Duxbury
QUANTITIES	G. Baker	J. Duxbury

PREPARED FOR THE STATE OF CALIFORNIA DEPARTMENT OF TRANSPORTATION

R. Manzanarez
PROJECT ENGINEER

BRIDGE NO. 34-0006L/R
KILOMETER POST 13.2/13.9

SAN FRANCISCO OAKLAND BAY BRIDGE
EAST SPAN SEISMIC SAFETY PROJECT
SELF-ANCHORED SUSPENSION BRIDGE
(SUPERSTRUCTURE & TOWER)

TOWER DIAPHRAGM DETAILS NO. 9

ORIGINAL SCALE IN MILLIMETERS FOR REDUCED PLANS 0 10 20 30 40 50 60 70 80 90 100

CU 04
EA 0120F1

DISREGARD PRINTS BEARING EARLIER REVISION DATES 04/15/04 10/25/05 11/13/05

REVISION DATES (PRELIMINARY STAGE ONLY)

SHEET 167R1 OF

FILE => I:\bb\04-012001\sas\contract plans and cco\cco\cco#21\detdh15.dgn

DIST.	COUNTY	ROUTE	KILOMETER POST TOTAL PROJECT	SHEET NO.	TOTAL SHEETS
04	SF	80	13.2/13.9	585R1	1204

REGISTERED ENGINEER - CIVIL

12-6-04

PLANS APPROVAL DATE

REGISTERED PROFESSIONAL ENGINEER Marwan N. Nader No. C 054426 Exp. 12/31/07 CIVIL STATE OF CALIFORNIA

The State of California or its officers or agents shall not be responsible for the accuracy or completeness of electronic copies of this plan sheet.

T.Y. LIN / MOFFATT & NICHOL
825 BATTERY STREET
SAN FRANCISCO, CA 94111

To get to the web site, go to: http://www.dot.ca.gov

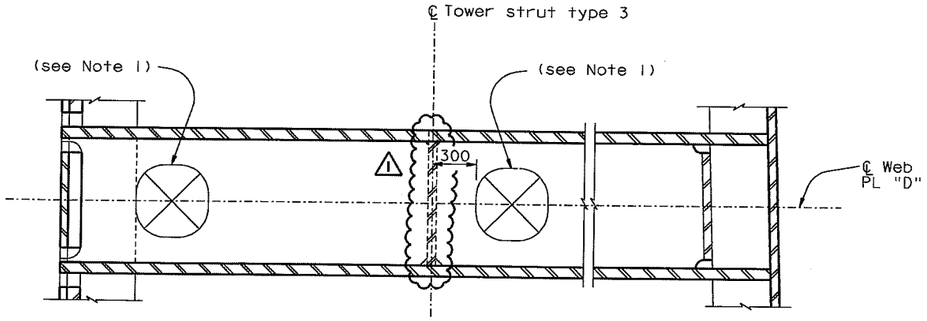

Elev 18 m shown
Elev 23, 28, 33, 38 & 43 m similar

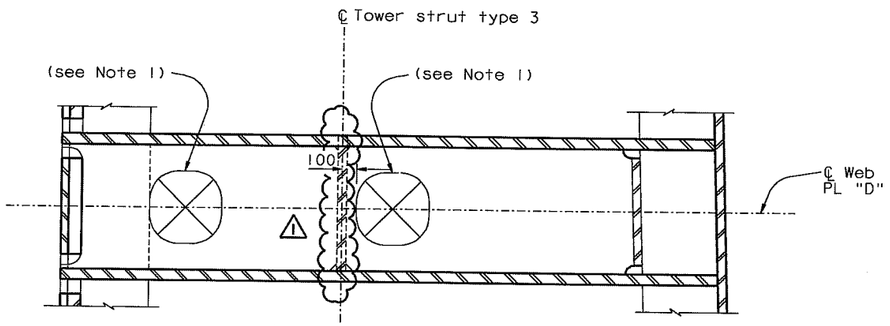

Elev 47.6 m shown
Elev 53, 65, 77, 89, 99 & 109 m similar

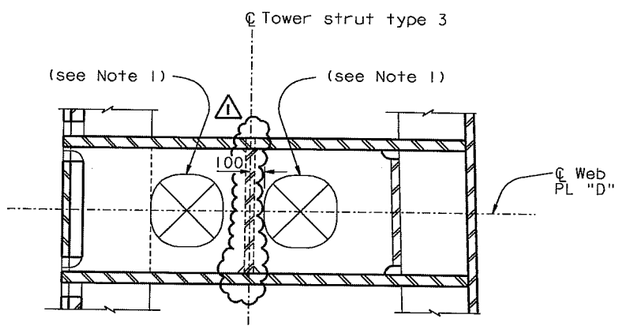

Elev 119 m shown
Elev 123, 127, 131, 135, 139 & 143 m similar

SECTION D-D (Web PL "D" access openings) (see Note 2)
1:20

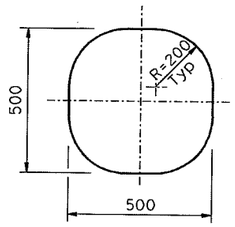

DETAIL A (500x500 Access opening)
1:10

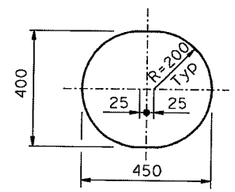

DETAIL B (400x450 Access opening)
1:10

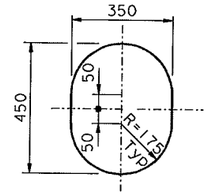

DETAIL C (350x450 Access opening)
1:10

MARK	DATE	DESCRIPTIONS	BY	CH'D	CCO#
1	06/23/06	WEB PLATE VIEW	MN	NV	21

REVISIONS

CONTRACT CHANGE ORDER NO. ____
SHEET ____ OF ____

NOTES:

1. Access opening is 500x500. See Detail A.
2. For Section D-D details not shown, see Section A-A on "Tower Diaphragm Details No. 8" sheet.

100% PS&E

TIME PLOTTED => 16:45:46
DATE PLOTTED => 23 APR 2007
USERNAME => ptom

ALL DIMENSIONS ARE IN MILLIMETERS UNLESS OTHERWISE SHOWN

R. Valizadeh/V. Toan/Y.L./W.L./F.C.
DESIGN OVERSIGHT
SIGN OFF DATE 06/23/06

	BY	CHECKED
DESIGN	M. Nader	J. Duxbury
DETAILS	G. Baker	J. Duxbury
QUANTITIES	G. Baker	J. Duxbury

PREPARED FOR THE STATE OF CALIFORNIA DEPARTMENT OF TRANSPORTATION

R. Manzanarez
PROJECT ENGINEER

BRIDGE NO. 34-0006L/R
KILOMETER POST 13.2/13.9

SAN FRANCISCO OAKLAND BAY BRIDGE
EAST SPAN SEISMIC SAFETY PROJECT
SELF-ANCHORED SUSPENSION BRIDGE
(SUPERSTRUCTURE & TOWER)

TOWER DIAPHRAGM DETAILS NO. 10

Rev. Date: 5-18-98

ORIGINAL SCALE IN MILLIMETERS FOR REDUCED PLANS 0 10 20 30 40 50 60 70 80 90 100

CU 04
EA 0120F1

DISREGARD PRINTS BEARING EARLIER REVISION DATES 04/19/04

REVISION DATES (PRELIMINARY STAGE ONLY)

SHEET 168R1 OF

FILE => I:\bb\04-012001\sas\contract plans and cco\cco\cco#21\detdh16.dgn

DIST.	COUNTY	ROUTE	KILOMETER POST TOTAL PROJECT	SHEET NO.	TOTAL SHEETS
04	SF	80	13.2/13.9	586R1	1204

REGISTERED ENGINEER - CIVIL

12-6-04
PLANS APPROVAL DATE

REGISTERED PROFESSIONAL ENGINEER
Marwan N. Nader
No. C 054426
Exp. 12/31/07
CIVIL
STATE OF CALIFORNIA

The State of California or its officers or agents shall not be responsible for the accuracy or completeness of electronic copies of this plan sheet.

T.Y. LIN / MOFFATT & NICHOL
825 BATTERY STREET
SAN FRANCISCO, CA 94111

Caltrans now has a web site! To get to the web site, go to: http://www.dot.ca.gov

Caltrans Metric

4

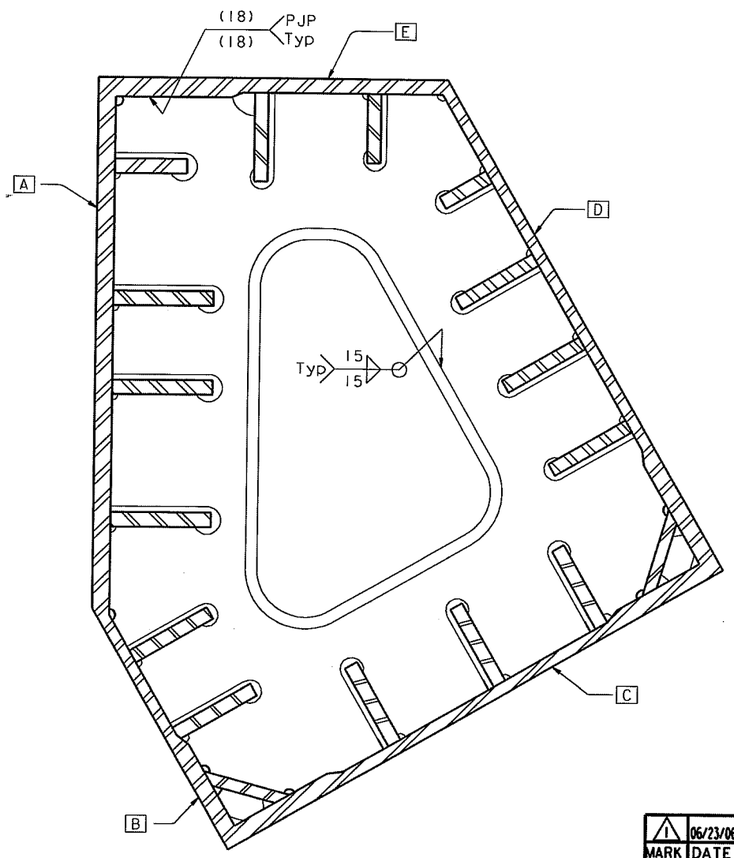

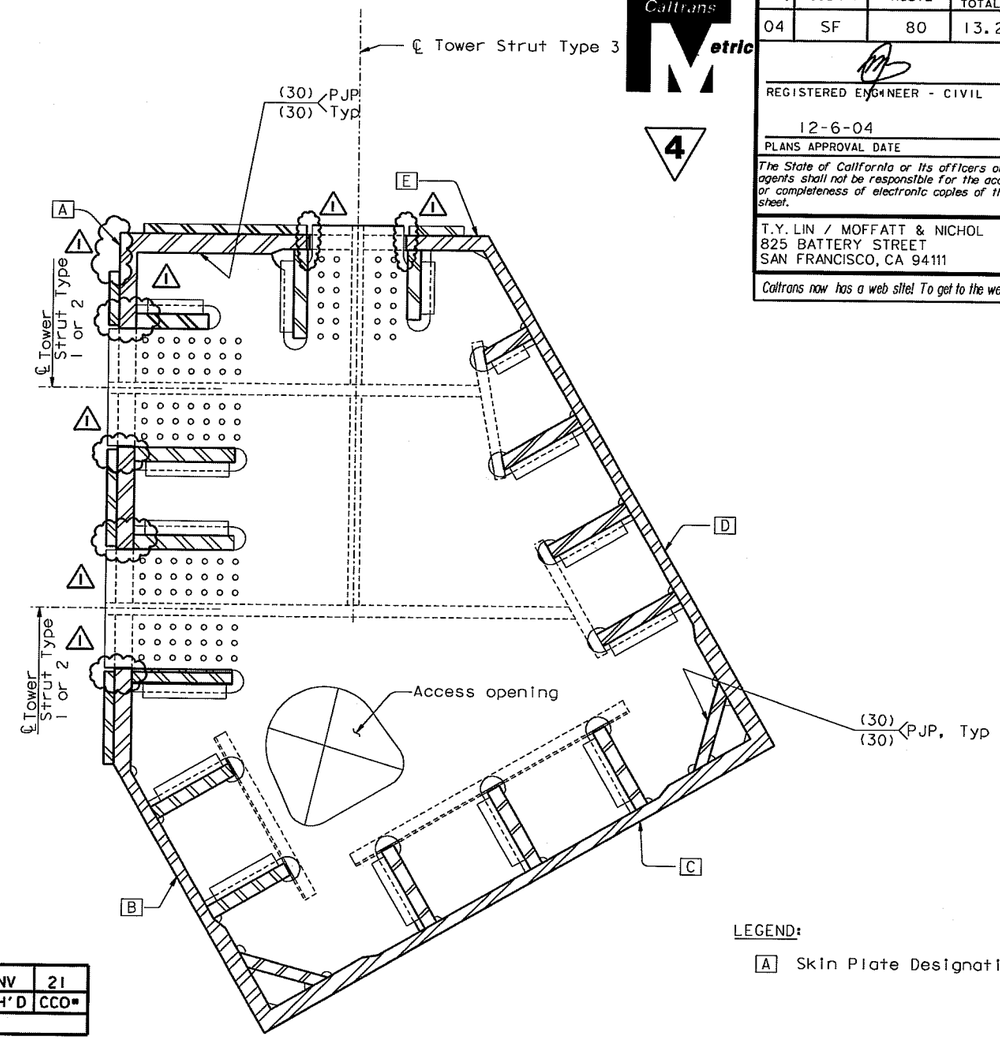

LEGEND:

A Skin Plate Designation

MARK	DATE	DESCRIPTIONS	BY	CH'D	CCO#
1	06/23/06	DELETE OVERMATCHING METAL NOTE	MN	NV	21

REVISIONS

CONTRACT CHANGE ORDER NO. ____
SHEET ____ OF ____

NOTES:

1. For weld size not shown, see "Tower Diaphragm Details No. 6" sheet.
2. An equivalent PJP weld from one side is an acceptable alternate.
3. Web plates shown in dashed lines for clarity. For details, see "Tower Diaphragm Details No. 8" sheet.

4 **REVISED PER ADDENDUM NO. 4 DATED DECEMBER 9, 2005**

FOR DIAPHRAGM TYPE 1

FOR DIAPHRAGM TYPE 2 AND 3

(Diaphragm type 2 shown, diaphragm type 3 similar)

DIAPHRAGM TO TOWER SHAFT SKIN PLATE

WELD SIZE AND LOCATION

NTS

ALL DIMENSIONS ARE IN MILLIMETERS UNLESS OTHERWISE SHOWN

R. Valizadeh/V. Toan/Y.L./W.L./F.C.
DESIGN OVERSIGHT
Reza Valizadeh / Vong Toan / Y. Liu
SIGN OFF DATE 06/23/06
Rev. Date: 5-18-98

	BY	CHECKED
DESIGN	M. Nader	M. Gulyas
DETAILS	L. Rus	M. Gulyas
QUANTITIES	L. Rus	Y. Zhang

PREPARED FOR THE STATE OF CALIFORNIA DEPARTMENT OF TRANSPORTATION

R. Manzanarez
PROJECT ENGINEER

BRIDGE NO. 34-0006L/R
KILOMETER POST 13.2/13.9

SAN FRANCISCO OAKLAND BAY BRIDGE
EAST SPAN SEISMIC SAFETY PROJECT
SELF-ANCHORED SUSPENSION BRIDGE
(SUPERSTRUCTURE & TOWER)

TOWER DIAPHRAGM DETAILS NO. 11

ORIGINAL SCALE IN MILLIMETERS FOR REDUCED PLANS 0 10 20 30 40 50 60 70 80 90 100

CU 04
EA 0120F1

DISREGARD PRINTS BEARING EARLIER REVISION DATES

REVISION DATES (PRELIMINARY STAGE ONLY) 08/02/99 05/31/01 04/08/02 07/01/02 12/19/02 11/13/05

SHEET 169R1 OF

FILE => I:\bb\04-012001\sas\contract plans and cco\cco\cco#21\aetdh08a.dgn

100 % PS&E

USERNAME => ptom DATE PLOTTED => 23 APR 2007 TIME PLOTTED => 16:47:11

DIST.	COUNTY	ROUTE	KILOMETER POST TOTAL PROJECT	SHEET NO.	TOTAL SHEETS
04	SF	80	13.2/13.9	587R1	1204

Caltrans Metric

4

REGISTERED ENGINEER - CIVIL

12-6-04

PLANS APPROVAL DATE

REGISTERED PROFESSIONAL ENGINEER Morwan N. Nader No. C 054426 Exp. 12/31/07 CIVIL STATE OF CALIFORNIA

The State of California or its officers or agents shall not be responsible for the accuracy or completeness of electronic copies of this plan sheet.

T.Y. LIN / MOFFATT & NICHOL
825 BATTERY STREET
SAN FRANCISCO, CA 94111

Caltrans now has a web site! To get to the web site, go to: http://www.dot.ca.gov

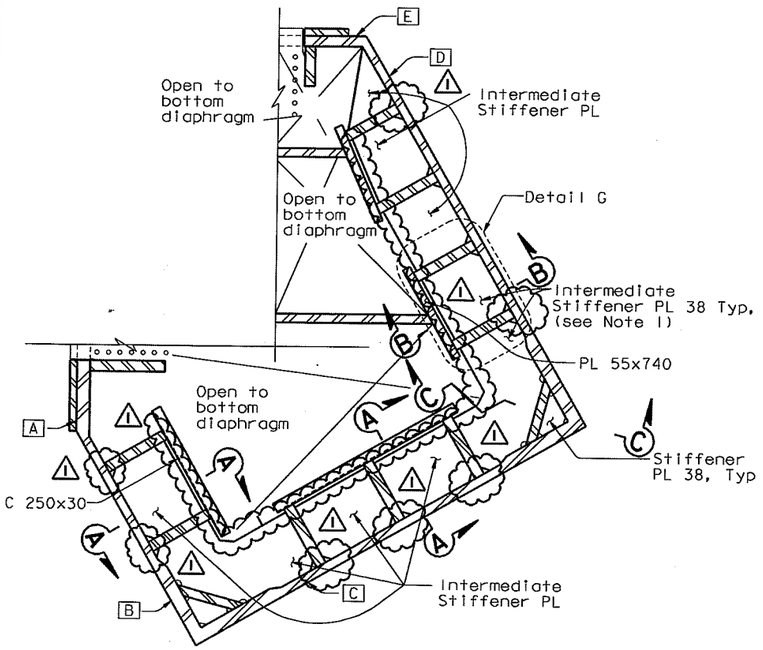

INTERMEDIATE STIFFENER PLATE PLAN (see Note 1)

1:20

(Diaphragm type 2C only, diaphragm not shown for clarity)

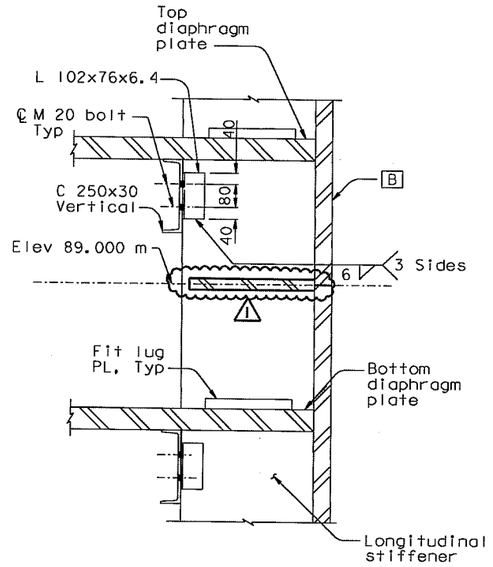

SECTION A-A (see Note 3)

1:10

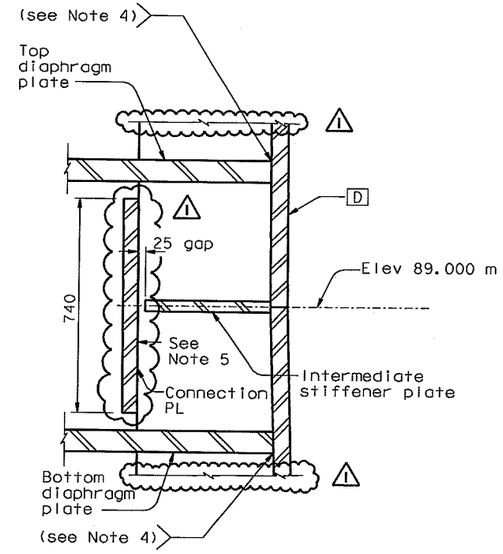

SECTION B-B

1:10

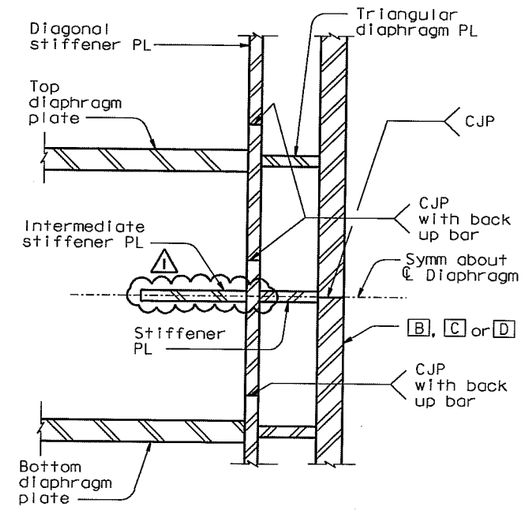

SECTION C-C

1:10

MARK	DATE	DESCRIPTIONS	BY	CH'D	CCO#
1	06/23/06	INTERMEDIATE STIFFENER PLATE & MISC.	MN	NV	21

REVISIONS

CONTRACT CHANGE ORDER NO. ____
SHEET ___ OF ___

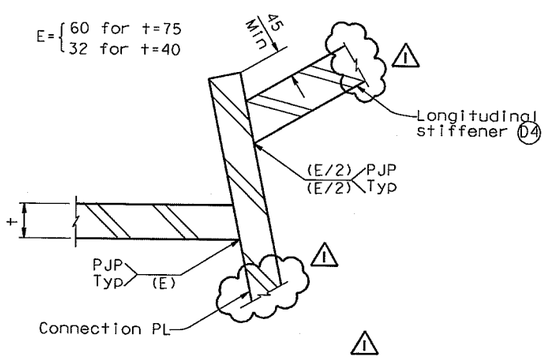

DETAIL E (Diaphragm not shown for clarity)

1:5

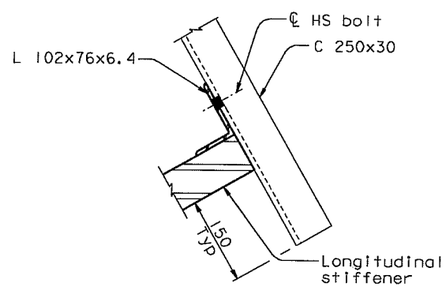

DETAIL F (Diaphragm not shown for clarity)

1:5

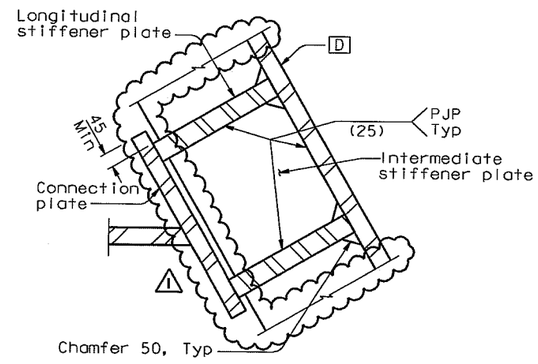

DETAIL G

1:10

NOTES:

1. Intermediate stiffener plate shall be located at elevation 89.000 m for tower skin wall C and D, and part of skin walls B.
2. For skin plate slope, see "Tower Shaft Details" sheets.
3. Details in Section A-A shall apply to similar details in all other diaphragm, unless noted otherwise.
4. The PJP and fillet welds between the diaphragm and skin plate may be made with an equivalent PJP weld from one side only. The back-up bar for CJP weld between the diaphragm and the skin plate may remain in place.
5. At stiffener kink at elevation 89.000 m cut flat surface for attachment of connection plate.

4 REVISED PER ADDENDUM NO. 4 DATED DECEMBER 9, 2005

100 % PS&E

ALL DIMENSIONS ARE IN MILLIMETERS UNLESS OTHERWISE SHOWN

R. Valizadeh/V. Toan/Y.L./W.L./F.C.
DESIGN OVERSIGHT
SIGN OFF DATE 06/23/06
Rev. Date: 5-18-98

	BY	CHECKED
DESIGN	M. Nader	M. Gulyas
DETAILS	L. Rus	M. Gulyas
QUANTITIES	L. Rus	Y. Zhang

PREPARED FOR THE STATE OF CALIFORNIA DEPARTMENT OF TRANSPORTATION

R. Manzanarez
PROJECT ENGINEER

BRIDGE NO. 34-0006L/R
KILOMETER POST 13.2/13.9

SAN FRANCISCO OAKLAND BAY BRIDGE
EAST SPAN SEISMIC SAFETY PROJECT
SELF-ANCHORED SUSPENSION BRIDGE
(SUPERSTRUCTURE & TOWER)

TOWER DIAPHRAGM DETAILS NO. 12

ORIGINAL SCALE IN MILLIMETERS FOR REDUCED PLANS 0 10 20 30 40 50 60 70 80 90 100

CU 04
EA 0120F1

DISREGARD PRINTS BEARING EARLIER REVISION DATES → 05/31/01 04/30/02 07/31/02 12/31/02 11/13/05

SHEET 170R1 OF

FILE => I:\bb\04-0120F1\sas\contract plans and cco\cco\cco#21\aetdh09.dgn

USERNAME => ptom DATE PLOTTED => 23 APR 2007 TIME PLOTTED => 16:48:17

DIST.	COUNTY	ROUTE	KILOMETER POST TOTAL PROJECT	SHEET NO.	TOTAL SHEETS
04	SF	80	13.2/13.9	588R1	1204

REGISTERED ENGINEER - CIVIL

12-6-04
PLANS APPROVAL DATE

REGISTERED PROFESSIONAL ENGINEER
Marwan N. Nader
No. C 054426
Exp. 12/31/07
CIVIL
STATE OF CALIFORNIA

The State of California or its officers or agents shall not be responsible for the accuracy or completeness of electronic copies of this plan sheet.

T.Y. LIN / MOFFATT & NICHOL
825 BATTERY STREET
SAN FRANCISCO, CA 94111

Caltrans now has a web site! To get to the web site, go to: http://www.dot.ca.gov

Caltrans Metric

MARK	DATE	DESCRIPTIONS	BY	CH'D	CCO#
1	06/23/06	LIMITS OF PJP WELD	MN	NV	21

REVISIONS

CONTRACT CHANGE ORDER NO. _____
SHEET ____ OF ____

4

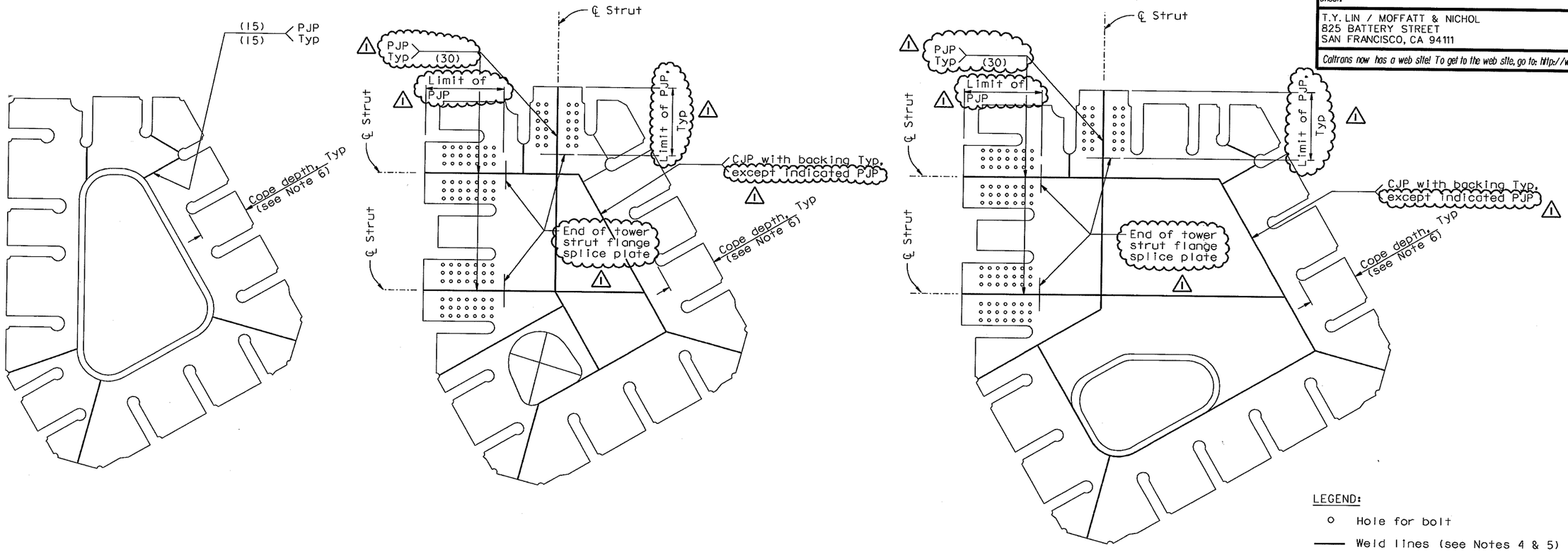

TYPE 1

TYPE 2

TYPE 3

TOWER DIAPHRAGM PLATE ASSEMBLY (For information only, see Note 5)
(Access holes not shown for clarity)

LEGEND:

o Hole for bolt

—— Weld lines (see Notes 4 & 5)

NOTES:

1. For tower strut type 1 details, see "Tower Strut Details No. 3" sheet.
2. For tower strut type 2 details, see "Tower Strut Details No. 5" sheet.
3. For tower strut type 3 details, see "Tower Strut Details No. 7" sheet.
4. Weld lines consist of a single weld or two welds as required.
5. This plate assembly is for information only. The Contractor shall submit a layout consistent with his means and methods for review and approval by the Engineer.
6. Cope depth for stiffeners shall be adjusted at bolted splice location as required.

4 REVISED PER ADDENDUM NO. 4 DATED DECEMBER 9, 2005

ALL DIMENSIONS ARE IN MILLIMETERS UNLESS OTHERWISE SHOWN

R. Valizadeh/V. Toan/Y.L./W.L./F.C.
DESIGN OVERSIGHT
Reza Valizadeh / Vong Toan / Y. Lin
SIGN OFF DATE 06/23/06
Rev. Date: 5-18-98

	BY	CHECKED
DESIGN	M. Nader	M. Gulyas
DETAILS	L. Rus	M. Gulyas
QUANTITIES	L. Rus	Y. Zhang

PREPARED FOR THE STATE OF CALIFORNIA DEPARTMENT OF TRANSPORTATION

R. Manzanarez
PROJECT ENGINEER

BRIDGE NO. 34-0006L/R
KILOMETER POST 13.2/13.9

SAN FRANCISCO OAKLAND BAY BRIDGE
EAST SPAN SEISMIC SAFETY PROJECT
SELF-ANCHORED SUSPENSION BRIDGE
(SUPERSTRUCTURE & TOWER)

TOWER DIAPHRAGM DETAILS NO. 13

ORIGINAL SCALE IN MILLIMETERS FOR REDUCED PLANS 0 10 20 30 40 50 60 70 80 90 100

CU 04
EA 0120F1

DISREGARD PRINTS BEARING EARLIER REVISION DATES

REVISION DATES (PRELIMINARY STAGE ONLY) 05/31/01 04/06/02 07/01/02 12/19/02 11/13/05

SHEET 171R1 OF

FILE => I:\bb\04-012001\sas\contract plans and cco\cco\cco#21\aetdh10.dgn

100 % PS&E

USERNAME => ptom DATE PLOTTED => 23 APR 2007 TIME PLOTTED => 16:49:19

DIST.	COUNTY	ROUTE	KILOMETER POST TOTAL PROJECT	SHEET NO.	TOTAL SHEETS
04	SF	80	13.2/13.9	597R1	1204

REGISTERED ENGINEER - CIVIL

12-6-04
PLANS APPROVAL DATE

REGISTERED PROFESSIONAL ENGINEER Marwan N. Nader No. C 054426 Exp. 12/31/07 CIVIL STATE OF CALIFORNIA

The State of California or its officers or agents shall not be responsible for the accuracy or completeness of electronic copies of this plan sheet.

T.Y. LIN / MOFFATT & NICHOL
825 BATTERY STREET
SAN FRANCISCO, CA 94111

To get to the web site, go to: http://www.dot.ca.gov

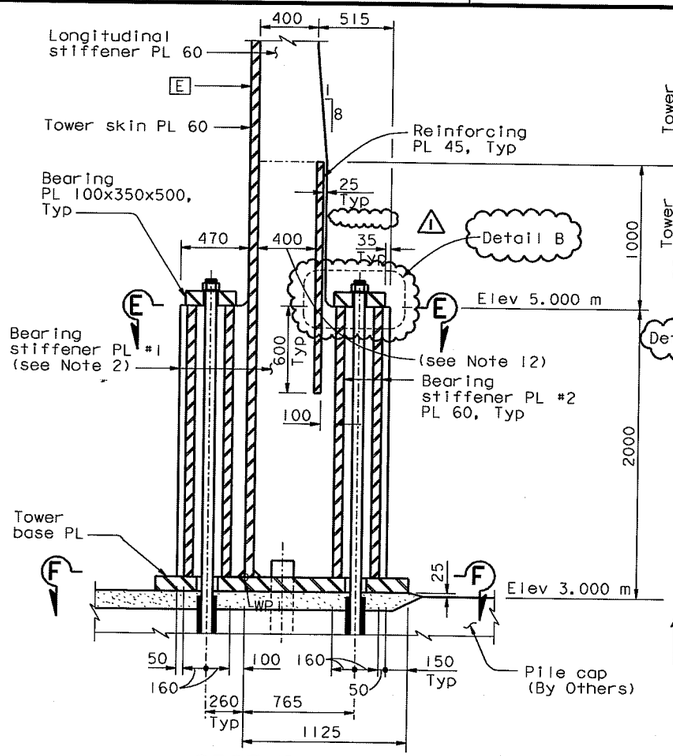

SECTION A-A
1:20

(Section at skin PL E is shown. Sections at skin PL A, B, and Tower base shear PL a2, b1, and b2 are similar. See Note 3)

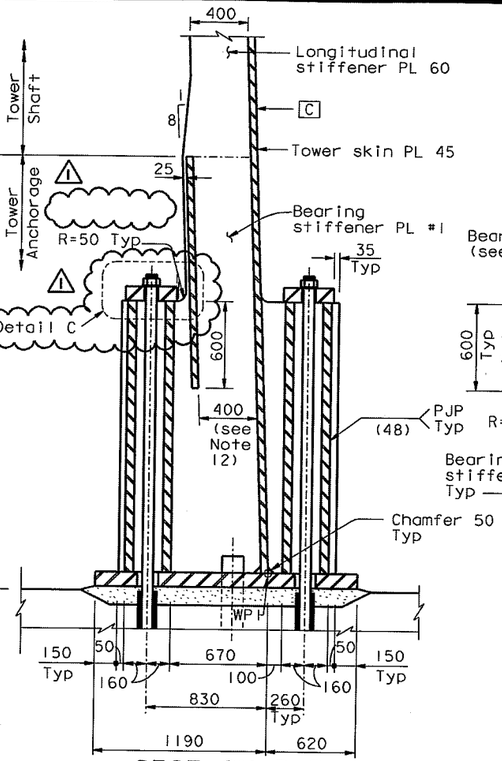

SECTION B-B
1:20

(Section at skin PL C is shown. Section at skin PL D, and Tower base shear PL a1, and c are similar. See Note 3)

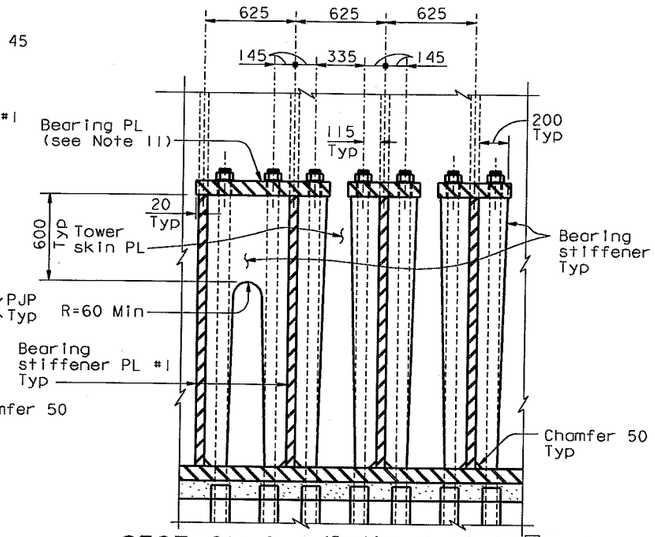

SECTION C-C
1:20

(Section at skin PL C is shown. Sections at skin PL A, B, D, E and Tower base shear PL a1, a2, b1, b2 and c are similar. See Note 3)

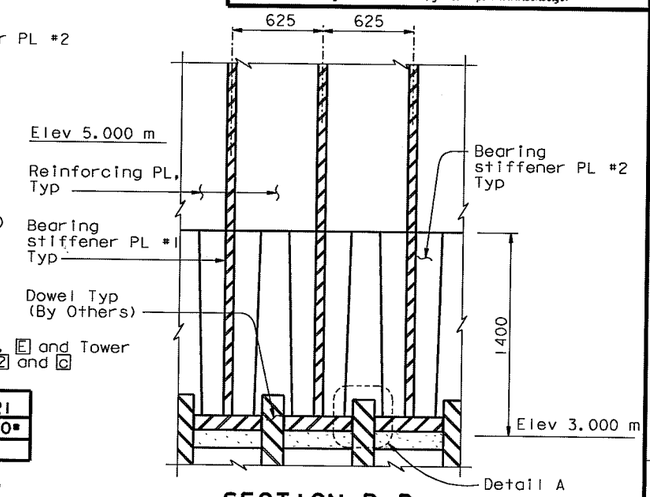

SECTION D-D
1:20

MARK	DATE	DESCRIPTIONS	BY	CH'D	CCO#
1	06/23/06	DELETE GAP TABLES	MN	NV	21

REVISIONS

CONTRACT CHANGE ORDER NO. ____
SHEET ___ OF ___

NOTES:

1. Bearing stiffener plates shall be milled to bear against the Bearing PL.
2. Bearing stiffener plate #1 thickness shall match longitudinal stiffener plate thickness.
3. For tower skin plate, longitudinal stiffener and base shear plate sizes and dimensions, see "Tower Shaft Details" sheets.
4. For tower base plate layout, see "Tower Anchorage Details No.2" sheet.
5. For anchor bolt and dowels layout, see "Tower Anchorage Details No.3" sheet.
6. For tower base plate stiffener layout, see "Tower Anchorage Details No.4" sheet.
7. For Detail A, see "Tower Anchorage Details No.7" sheet.
8. For weld size of longitudinal stiffener to tower skin plate, see "Tower Splice Details No.2" sheet.
9. For Details B and C, see "Tower Anchorage Details No.6" sheet.
10. Bearing stiffener PL #2 shall be milled to bear against tower base plate.
11. A single bearing plate shall be used at locations where Bearing Stiffener PL #2 are connected.
12. The clear distance between the inner face of the tower skin plate and the reinforcing plate shall match the longitudinal stiffener plate width. For longitudinal stiffener plate width, see "Tower Shaft Details" sheets.
13. At the base of stiffeners two-sided PJP welds may be replaced with equivalent single-sided welds, subject to approval by the Engineer.

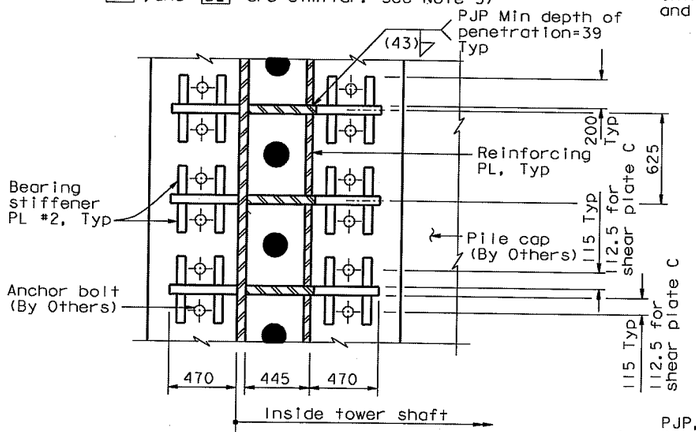

4 SECTION E-E
1:20

(Section at skin PL E is shown. Other skin PL and tower base shear PL are similar)

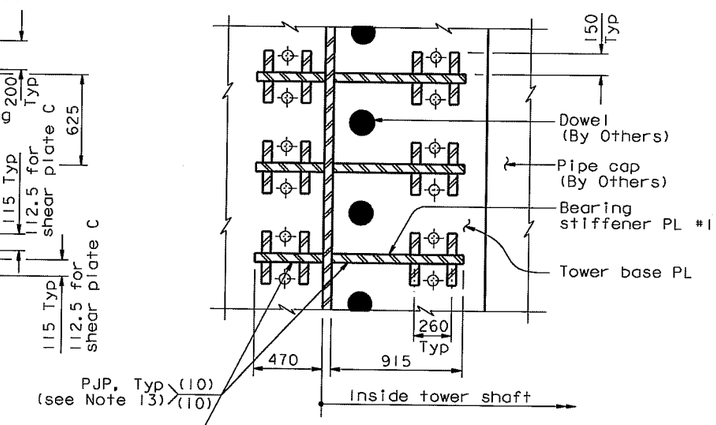

SECTION F-F
1:20

(Section at skin PL E is shown. Other skin PL and tower base shear PL are similar)

4 REVISED PER ADDENDUM NO. 4 DATED DECEMBER 9, 2005

ALL DIMENSIONS ARE IN MILLIMETERS UNLESS OTHERWISE SHOWN

R. Valizadeh/V. Toan/Y.L./W.L./F.C.
DESIGN OVERSIGHT
SIGN OFF DATE 06/23/06

	BY	CHECKED
DESIGN	M. Nader	S. Camo
DETAILS	L. Rus	S. Camo
QUANTITIES	L. Rus	Y. Zhang

PREPARED FOR THE STATE OF CALIFORNIA DEPARTMENT OF TRANSPORTATION

R. Manzanarez
PROJECT ENGINEER

BRIDGE NO. 34-0006L/R
KILOMETER POST 13.2/13.9

SAN FRANCISCO OAKLAND BAY BRIDGE
EAST SPAN SEISMIC SAFETY PROJECT
SELF-ANCHORED SUSPENSION BRIDGE
(SUPERSTRUCTURE & TOWER)

TOWER ANCHORAGE DETAILS NO. 5

Rev. Date: 5-18-98

ORIGINAL SCALE IN MILLIMETERS FOR REDUCED PLANS 0 10 20 30 40 50 60 70 80 90 100

CU 04
EA 0120F1

DISREGARD PRINTS BEARING EARLIER REVISION DATES

REVISION DATES (PRELIMINARY STAGE ONLY) 05/18/99 08/06/99 05/31/01 04/08/02 01/07/02 12/19/02 07/18/03 11/13/05

SHEET 180R1 OF

FILE => I:\bb\04-012001\sas\contract plans and cco\cco\cco#21\aetwa04.dgn

USERNAME => ptom DATE PLOTTED => 23 APR 2007 TIME PLOTTED => 16:50:27

100 % PS&E

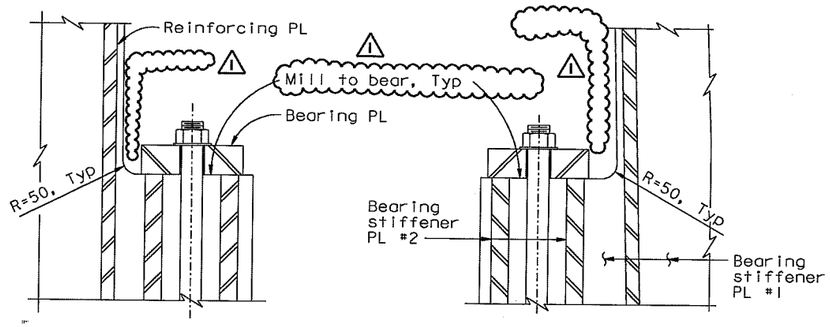

DETAIL B
1:10

DETAIL C
1:10

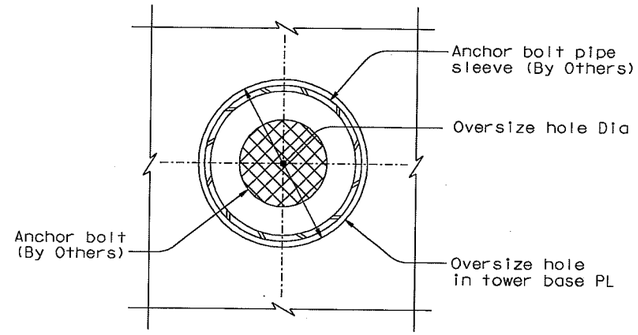

AT TOWER BASE PLATE

ANCHOR BOLT HOLE PLAN VIEW
1:2.5

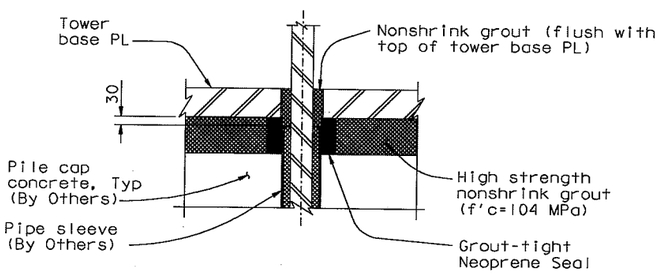

AT TOWER BASE PLATE

ANCHOR BOLT ELEVATION VIEW
1:10

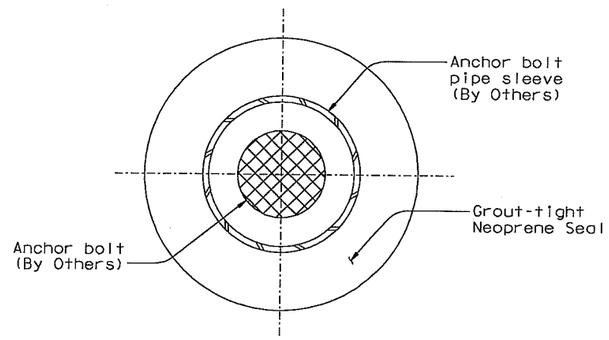

GROUT-TIGHT NEOPRENE SEAL PLAN VIEW (see Note 4)
NTS

DIST.	COUNTY	ROUTE	KILOMETER POST TOTAL PROJECT	SHEET NO.	TOTAL SHEETS
04	SF	80	13.2/13.9	598R1	1204

REGISTERED ENGINEER - CIVIL

12-6-04
PLANS APPROVAL DATE

REGISTERED PROFESSIONAL ENGINEER Marwan N. Nader No. C 054426 Exp. 12/31/07 CIVIL STATE OF CALIFORNIA

The State of California or its officers or agents shall not be responsible for the accuracy or completeness of electronic copies of this plan sheet.

T.Y. LIN / MOFFATT & NICHOL
825 BATTERY STREET
SAN FRANCISCO, CA 94111

To get to the web site, go to: http://www.dot.ca.gov

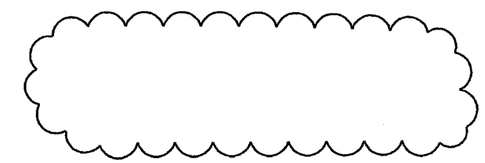

MARK	DATE	DESCRIPTIONS	BY	CH'D	CCO#
1	06/23/06	DELETE GAP TABLES	MN	NV	21

REVISIONS

CONTRACT CHANGE ORDER NO. ____
SHEET ____ OF ____

Anchor Bolt Dia	75	100
Oversize hole Dia	145	170

LEGEND:

- Point of Tangency

NOTES:

1. Information provided in Table 1 and Table 2 is for information only. The Contractor shall verify these values. A smaller radius may be used at locations where the gap is zero, if necessary.
2. Anchor bolt pipe sleeve shall be filled with nonshrink grout. For additional prestressing details, see "Prestressing Notes" sheet.
3. The Contractor shall develop a scheme for grouting the anchor bolts and submit for review and approval by the Engineer.
4. Grout-tight neoprene seal shown is schematic and is for information only. The seal shall prevent any high strength nonshrink grout from seeping inside the anchor bolt pipe sleeves during grouting of the tower base plate. This is necessary for proper stressing of the anchor bolts. Once final stressing of the anchor bolts is complete, the pipe sleeves shall be grouted (see Note 2). The Contractor shall submit seal details consistent with his means and methods to the Engineer for review and approval.

ALL DIMENSIONS ARE IN MILLIMETERS UNLESS OTHERWISE SHOWN

R. Valizadeh/V. Toan/Y.L./W.L./F.C.
DESIGN OVERSIGHT
SIGN OFF DATE 06/23/06
Rev. Date: 5-18-98

	BY	CHECKED
DESIGN	M. Nader	S. Camo
DETAILS	L. Rus	S. Camo
QUANTITIES	L. Rus	Y. Zhang

PREPARED FOR THE STATE OF CALIFORNIA DEPARTMENT OF TRANSPORTATION

R. Manzanarez
PROJECT ENGINEER

BRIDGE NO. 34-0006L/R
KILOMETER POST 13.2/13.9

SAN FRANCISCO OAKLAND BAY BRIDGE
EAST SPAN SEISMIC SAFETY PROJECT
SELF-ANCHORED SUSPENSION BRIDGE
(SUPERSTRUCTURE & TOWER)

TOWER ANCHORAGE DETAILS NO. 6

ORIGINAL SCALE IN MILLIMETERS FOR REDUCED PLANS 0 10 20 30 40 50 60 70 80 90 100

CU 04
EA 0120F1

DISREGARD PRINTS BEARING EARLIER REVISION DATES

REVISION DATES (PRELIMINARY STAGE ONLY) 04/08/02 07/01/02 12/19/02 07/18/03

SHEET 181R1 OF

FILE => I:\bb\04-012001\sas\contract plans and cco\cco\cco#21\aetwa06.dgn

100 % PS&E

DATE PLOTTED => 23 APR 2007 TIME PLOTTED => 16:51:22
USERNAME => ptom

Caltrans now has a web site! To get to the web site, go to: http://www.dot.ca.gov

DIST.	COUNTY	ROUTE	KILOMETER POST TOTAL PROJECT	SHEET NO.	TOTAL SHEETS
04	SF	80	13.2/13.9	608R1	1204

Caltrans Metric

REGISTERED ENGINEER - CIVIL

12-6-04
PLANS APPROVAL DATE

REGISTERED PROFESSIONAL ENGINEER Marwan N. Nader No. C 054426 Exp. 12/31/07 CIVIL STATE OF CALIFORNIA

The State of California or its officers or agents shall not be responsible for the accuracy or completeness of electronic copies of this plan sheet.

T.Y. LIN / MOFFATT & NICHOL
825 BATTERY STREET
SAN FRANCISCO, CA 94111

NOTES:

1. All Tower Saddle Grillage steel plates between elevations 144.000 m & 151.000 m shall be A709M HPS 485W steel.
2. For Section K-K, see "Tower Saddle Grillage Details No.7" sheet.
3. For Detail M and Detail M', see "Tower Saddle Grillage Details No.7" sheet.
4. For tower shaft splice at Elev 146.280 m shaft, see "Tower Splice Details" sheets.
5. For connection of grillage top PL to grillage, see "Tower Saddle Grillage Details No.8" sheet.
6. For grillage PL splice, see "Tower Saddle Grillage Details No.7" sheet.
7. For extent of grillage top PL, see Section E-E on "Tower Saddle Grillage Details No.8" sheet.
8. Shimming will not be permitted below grillage top PL.

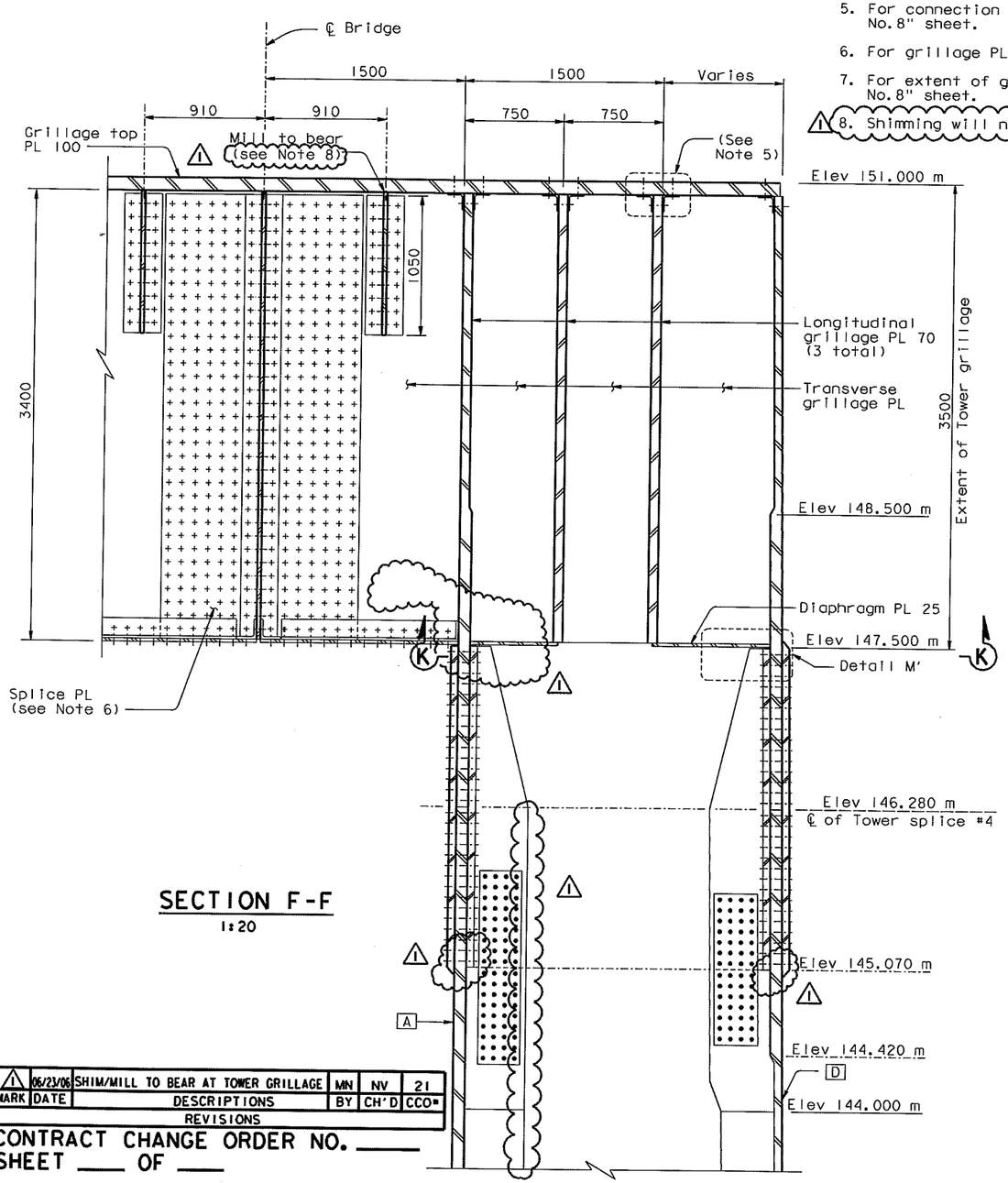

SECTION F-F
1:20

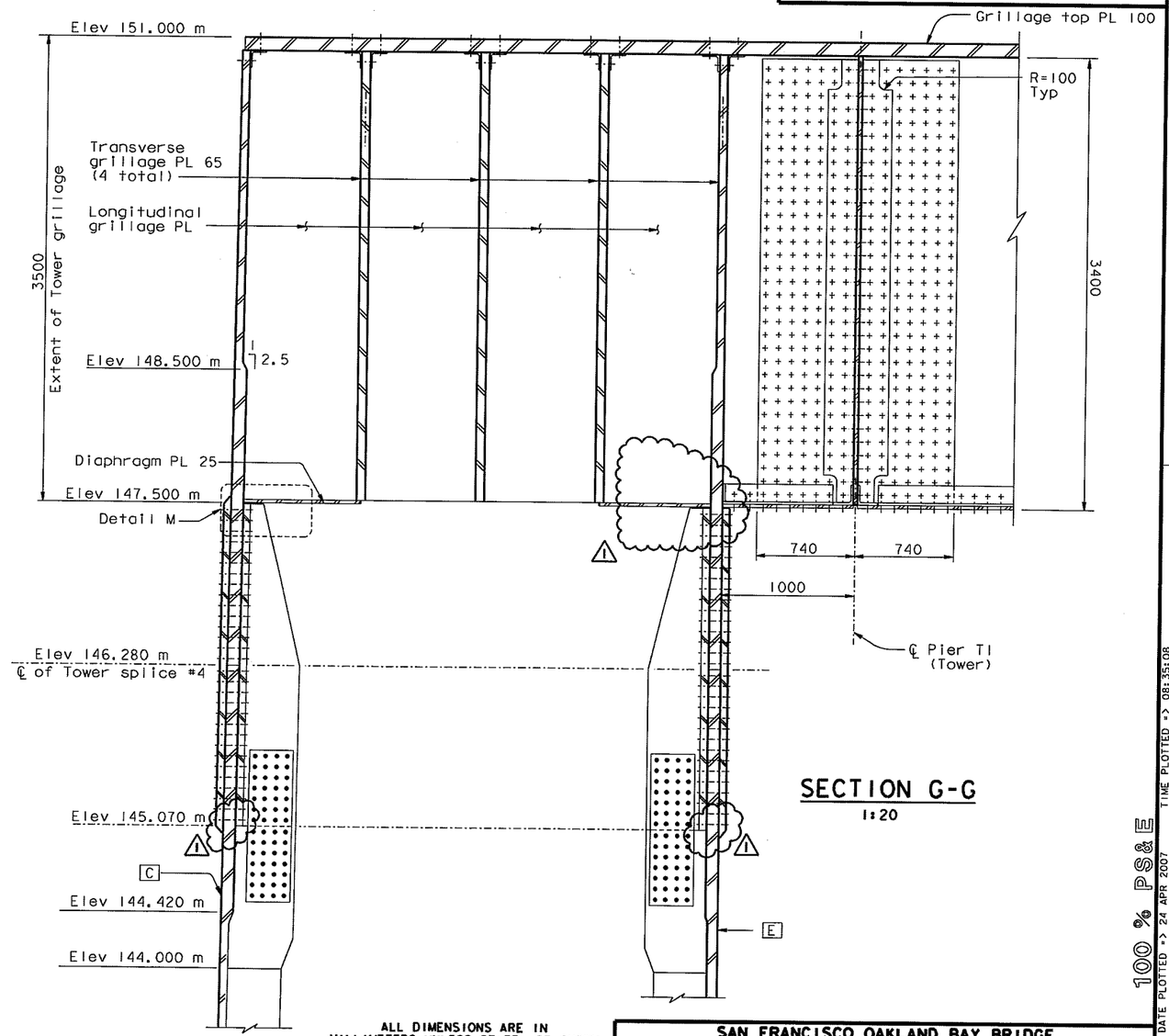

SECTION G-G
1:20

MARK	DATE	DESCRIPTIONS	BY	CH'D	CCO#
1	06/23/06	SHIM/MILL TO BEAR AT TOWER GRILLAGE	MN	NV	21

REVISIONS

CONTRACT CHANGE ORDER NO. ____
SHEET ___ OF ___

ALL DIMENSIONS ARE IN MILLIMETERS UNLESS OTHERWISE SHOWN

100 % PS&E

R. Valizadeh/V. Toan/Y.L./W.L./F.C.
DESIGN OVERSIGHT
Roya Valizadeh / Vong Toan / Y. Liu
SIGN OFF DATE 06/23/06

Rev. Date: 5-18-98

DESIGN	BY M. Nader	CHECKED	R. Mayrbauri
DETAILS	BY R. Kanitkar	CHECKED	R. Mayrbauri
QUANTITIES	BY R. Kanitkar	CHECKED	Y. Zhang

PREPARED FOR THE STATE OF CALIFORNIA DEPARTMENT OF TRANSPORTATION

R. Manzanarez
PROJECT ENGINEER

BRIDGE NO. 34-0006L/R
KILOMETER POST 13.2/13.9

SAN FRANCISCO OAKLAND BAY BRIDGE
EAST SPAN SEISMIC SAFETY PROJECT
SELF-ANCHORED SUSPENSION BRIDGE
(SUPERSTRUCTURE & TOWER)

TOWER SADDLE GRILLAGE DETAILS NO.4

ORIGINAL SCALE IN MILLIMETERS FOR REDUCED PLANS 0 10 20 30 40 50 60 70 80 90 100

CU 04
EA 0120F1

DISREGARD PRINTS BEARING EARLIER REVISION DATES

REVISION DATES (PRELIMINARY STAGE ONLY): 05/15/99 08/02/99 05/31/01 04/08/02 04/26/02 07/02/02 12/19/02

SHEET 191R1 OF

FILE => I:\bb\04-012001\sas\contract plans and cco\cco\cco#21\aecsg04.dgn

USERNAME => ptom DATE PLOTTED => 24 APR 2007 TIME PLOTTED => 08:35:08

MARK	DATE	DESCRIPTIONS	BY	CH'D	CCO#
1	06/23/06	SHIM/MILL TO BEAR AT TOWER GRILLAGE	MN	NV	21

REVISIONS

CONTRACT CHANGE ORDER NO. ____
SHEET ____ OF ____

DIST.	COUNTY	ROUTE	KILOMETER POST TOTAL PROJECT	SHEET NO.	TOTAL SHEETS
04	SF	80	13.2/13.9	609R1	1204

Caltrans Metric

REGISTERED ENGINEER - CIVIL

12-6-04
PLANS APPROVAL DATE

The State of California or its officers or agents shall not be responsible for the accuracy or completeness of electronic copies of this plan sheet.

REGISTERED PROFESSIONAL ENGINEER Marwan N. Nader No. C 054426 Exp. 12/31/07 CIVIL STATE OF CALIFORNIA

T.Y. LIN / MOFFATT & NICHOL
825 BATTERY STREET
SAN FRANCISCO, CA 94111

Caltrans now has a web site! To get to the web site, go to: http://www.dot.ca.gov

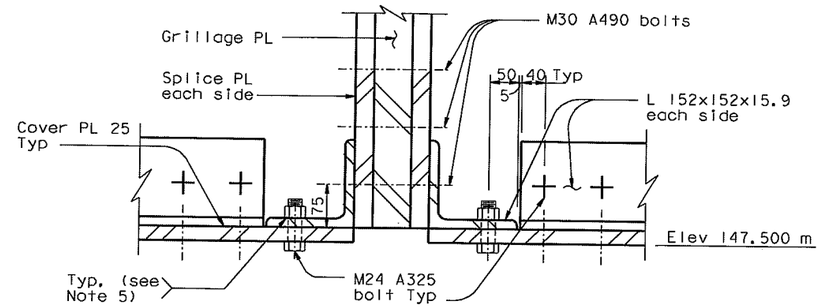

DETAIL F
1:5

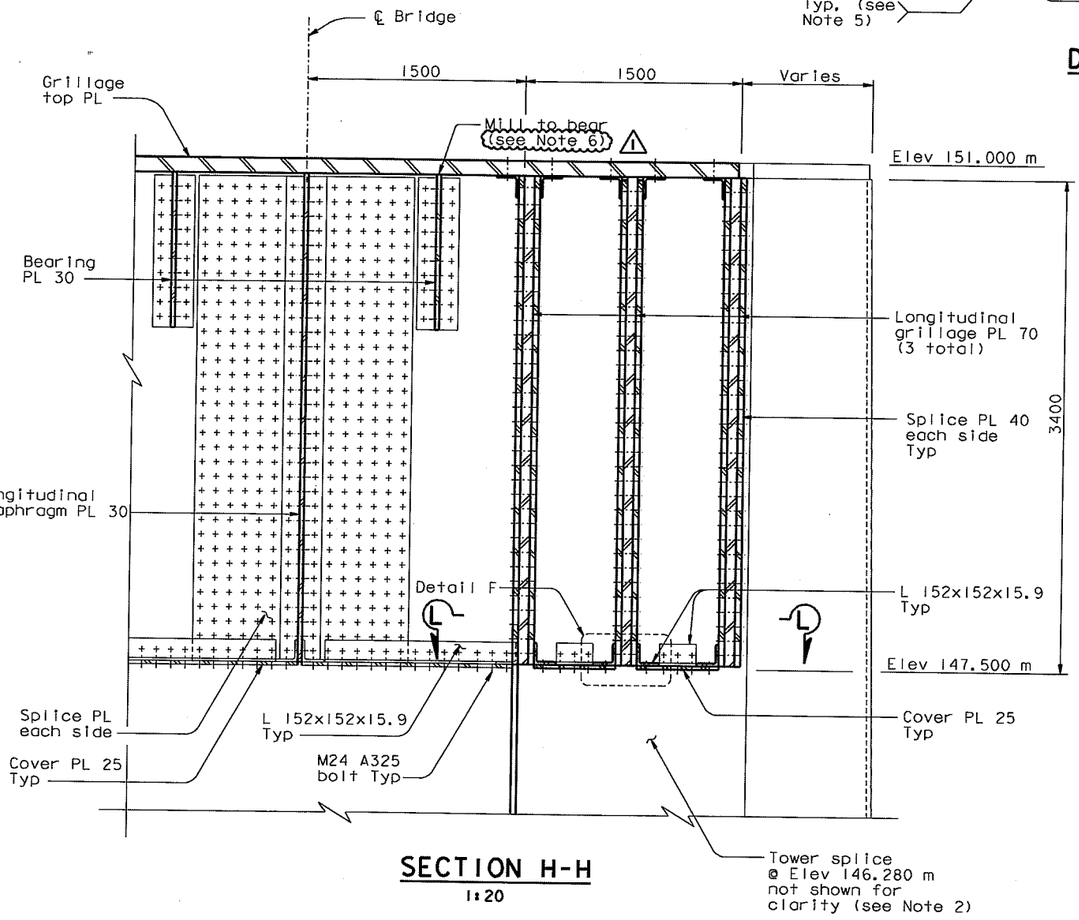

SECTION H-H
1:20

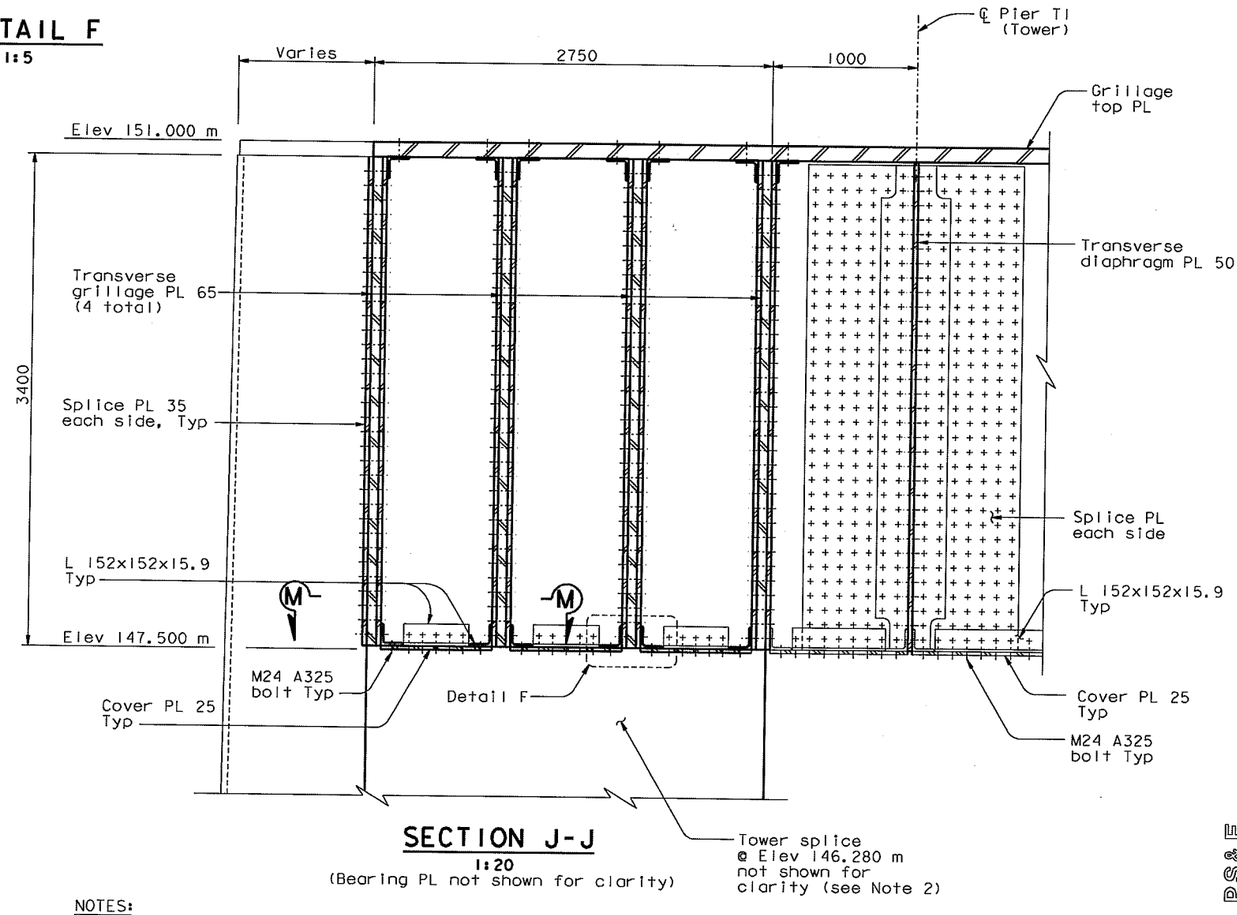

SECTION J-J
1:20
(Bearing PL not shown for clarity)

NOTES:

1. For grillage PL splice, see "Tower Saddle Grillage Details No.7" sheet.
2. For tower splice at Elev 146.280 m, see "Tower Splice Details" sheets.
3. For sections L-L & M-M, see "Tower Saddle Grillage Details No.6" sheet.
4. For extent of grillage top PL, see Section E-E on "Tower Saddle Grillage Details No.8" sheet.
5. Bolt nut shall be tack welded to angle for connection to cover plate.
6. Shimming will not be permitted below grillage top PL.

ALL DIMENSIONS ARE IN MILLIMETERS UNLESS OTHERWISE SHOWN

100 % PS&E

DATE PLOTTED => 24 APR 2007 TIME PLOTTED => 08:33:34

USERNAME => ptom

R. Valizadeh/V. Toan/Y.L./W.L./F.C.
DESIGN OVERSIGHT
Roger Valizadeh / Vong Toan / Y. Liu
SIGN OFF DATE 06/23/06
Rev. Date: 5-18-98

	BY	CHECKED
DESIGN	M. Nader	R. Mayrbauri
DETAILS	R. Kanitkar	R. Mayrbauri
QUANTITIES	R. Kanitkar	Y. Zhang

PREPARED FOR THE STATE OF CALIFORNIA DEPARTMENT OF TRANSPORTATION

R. Manzanarez
PROJECT ENGINEER

BRIDGE NO. 34-0006L/R
KILOMETER POST 13.2/13.9

SAN FRANCISCO OAKLAND BAY BRIDGE
EAST SPAN SEISMIC SAFETY PROJECT
SELF-ANCHORED SUSPENSION BRIDGE
(SUPERSTRUCTURE & TOWER)

TOWER SADDLE GRILLAGE DETAILS NO.5

ORIGINAL SCALE IN MILLIMETERS FOR REDUCED PLANS 0 10 20 30 40 50 60 70 80 90 100

CU 04
EA 0120F1

DISREGARD PRINTS BEARING EARLIER REVISION DATES

REVISION DATES (PRELIMINARY STAGE ONLY) 08/02/99 05/31/01 04/08/02 04/26/02 07/01/02 12/19/02

SHEET 192R1 OF

FILE => I:\bb\04-012001\sas\contract plans and cco\cco\cco#21\aecsg05.dgn

MARK	DATE	DESCRIPTIONS	BY	CH'D	CCO#
1	06/23/06	NOTE FOR SPLICE PLATES	MN	NV	21

REVISIONS

CONTRACT CHANGE ORDER NO. ____
SHEET ____ OF ____

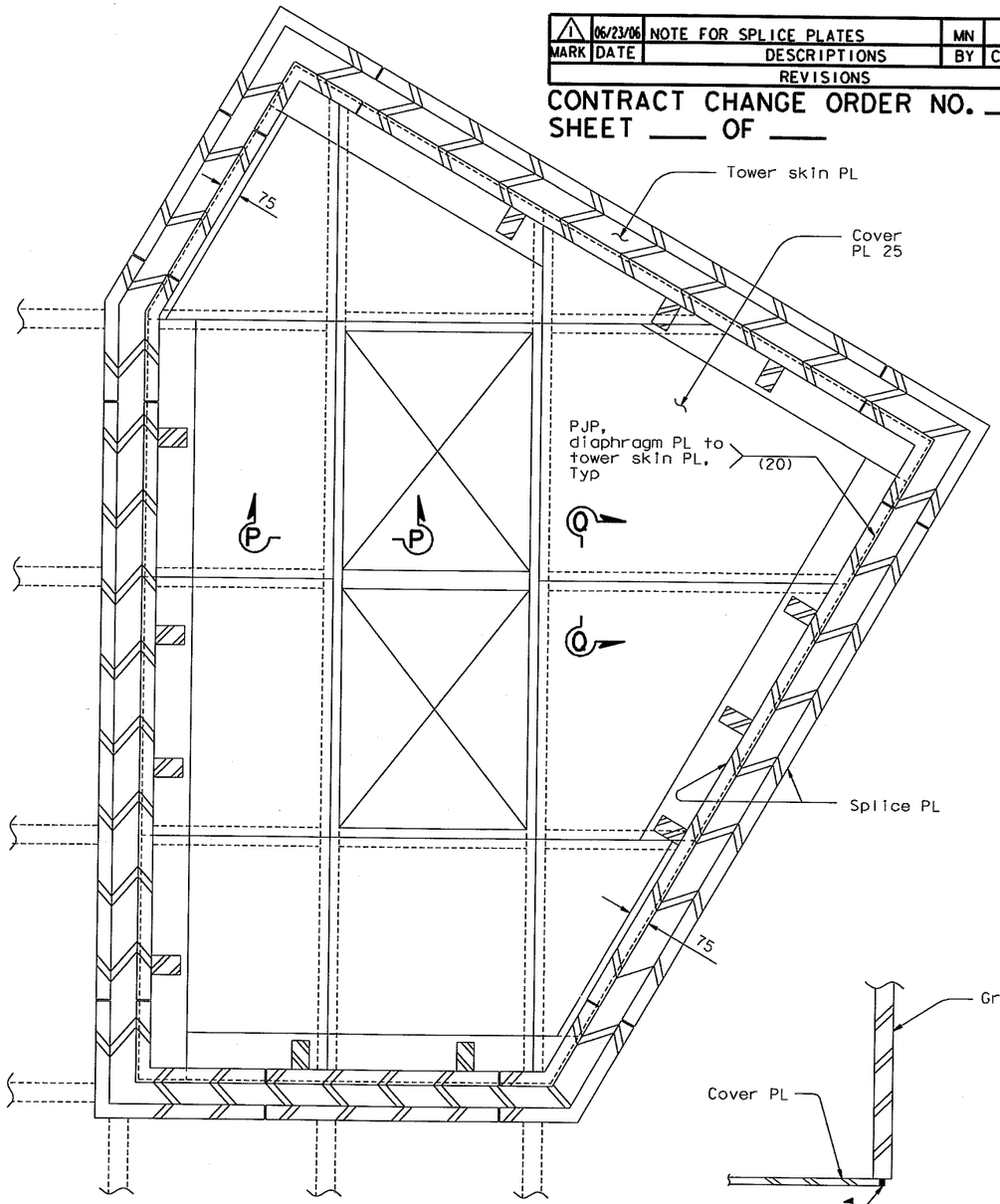

SECTION K-K
DIAPHRAGM BELOW GRILLAGE
1:10

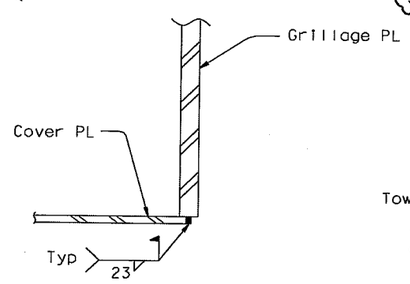

SECTION P-P
1:10

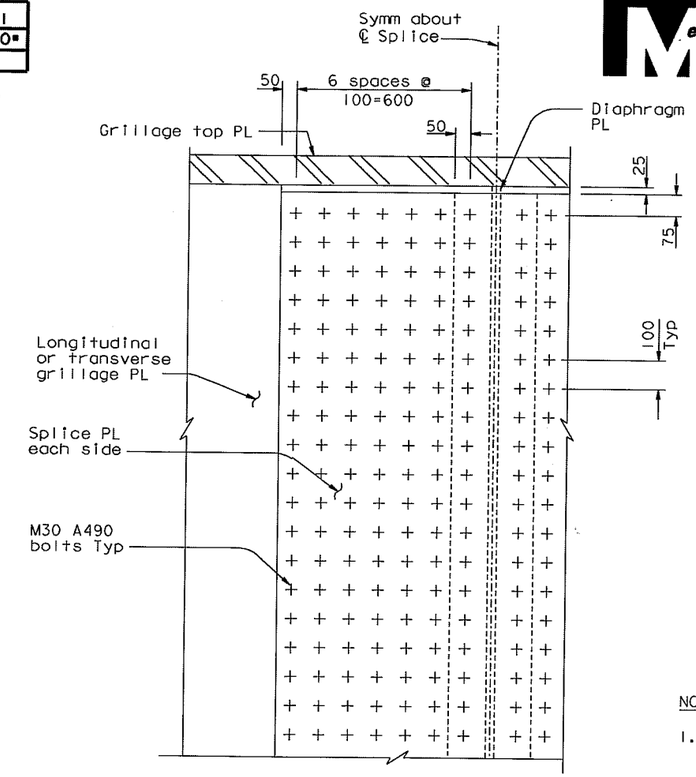

(Grillage PL Splice Detail)

ELEVATION N-N
1:10

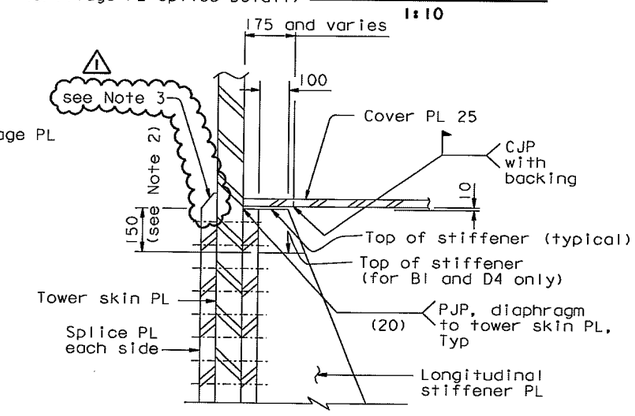

DETAIL M (Detail M' opposite hand)
1:10

NOTES:

1. For Tower Splice @ Elev 146.280 m, see "Tower Splice Details" sheets.
2. Cope applies to longitudinal stiffeners B1 and D4 only.
3. Details shown is for skin PLs B, C, and D only. For details of top of exterior splice plates for skin PLs A and E, see Detail A on "Tower Splice Details No. 19" sheet.

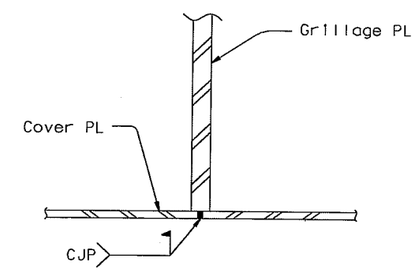

SECTION Q-Q
1:10

DIST.	COUNTY	ROUTE	KILOMETER POST TOTAL PROJECT	SHEET NO.	TOTAL SHEETS
04	SF	80	13.2/13.9	611R1	1204

REGISTERED ENGINEER - CIVIL

1-27-03
PLANS APPROVAL DATE

The State of California or its officers or agents shall not be responsible for the accuracy or completeness of electronic copies of this plan sheet.

REGISTERED PROFESSIONAL ENGINEER Marwan N. Nader No. C 054426 Exp. 12/31/07 CIVIL STATE OF CALIFORNIA

T.Y. LIN / MOFFATT & NICHOL
825 BATTERY STREET
SAN FRANCISCO, CA 94111

To get to the web site, go to: http://www.dot.ca.gov

ALL DIMENSIONS ARE IN MILLIMETERS UNLESS OTHERWISE SHOWN

R. Valizadeh/V. Toan/Y.L./W.L./F.C.
DESIGN OVERSIGHT
Regn Valizadeh / Vong Toan / Y. Liu
SIGN OFF DATE 06/23/06
Rev. Date: 5-18-98

	BY	CHECKED
DESIGN	M. Nader	R. Mayrbauri
DETAILS	R. Kanitkar	R. Mayrbauri
QUANTITIES	R. Kanitkar	Y. Zhang

PREPARED FOR THE STATE OF CALIFORNIA DEPARTMENT OF TRANSPORTATION

R. Manzanarez
PROJECT ENGINEER

BRIDGE NO. 34-0006L/R
KILOMETER POST 13.2/13.9

SAN FRANCISCO OAKLAND BAY BRIDGE
EAST SPAN SEISMIC SAFETY PROJECT
SELF-ANCHORED SUSPENSION BRIDGE
(SUPERSTRUCTURE & TOWER)

TOWER SADDLE GRILLAGE DETAILS NO. 7

ORIGINAL SCALE IN MILLIMETERS FOR REDUCED PLANS 0 10 20 30 40 50 60 70 80 90 100

CU 04
EA 0120F1

DISREGARD PRINTS BEARING EARLIER REVISION DATES

REVISION DATES (PRELIMINARY STAGE ONLY) 08/02/99 05/31/01 04/08/02 04/26/02 07/01/02 12/19/02

SHEET 194R1 OF

FILE => I:\bb\04-012001\sas\contract plans and cco\cco\cco#21\aecsg07.dgn

100 % PS&E

USERNAME => ptom DATE PLOTTED => 24 APR 2007 TIME PLOTTED => 08:36:24

DIST.	COUNTY	ROUTE	KILOMETER POST TOTAL PROJECT	SHEET NO.	TOTAL SHEETS
04	SF	80	13.2/13.9	612R1	1204

REGISTERED ENGINEER - CIVIL

1-27-03

PLANS APPROVAL DATE

REGISTERED PROFESSIONAL ENGINEER Marwan N. Nader No. C 054426 Exp. 12/31/07 CIVIL STATE OF CALIFORNIA

The State of California or its officers or agents shall not be responsible for the accuracy or completeness of electronic copies of this plan sheet.

T.Y. LIN / MOFFATT & NICHOL
825 BATTERY STREET
SAN FRANCISCO, CA 94111

To get to the web site, go to: http://www.dot.ca.gov

MARK	DATE	DESCRIPTIONS	BY	CH'D	CCO#
1	06/23/06	SHIM/MILL TO BEAR AT TOWER GRILLAGE	MN	NV	21

REVISIONS

CONTRACT CHANGE ORDER NO. ____
SHEET ____ OF ____

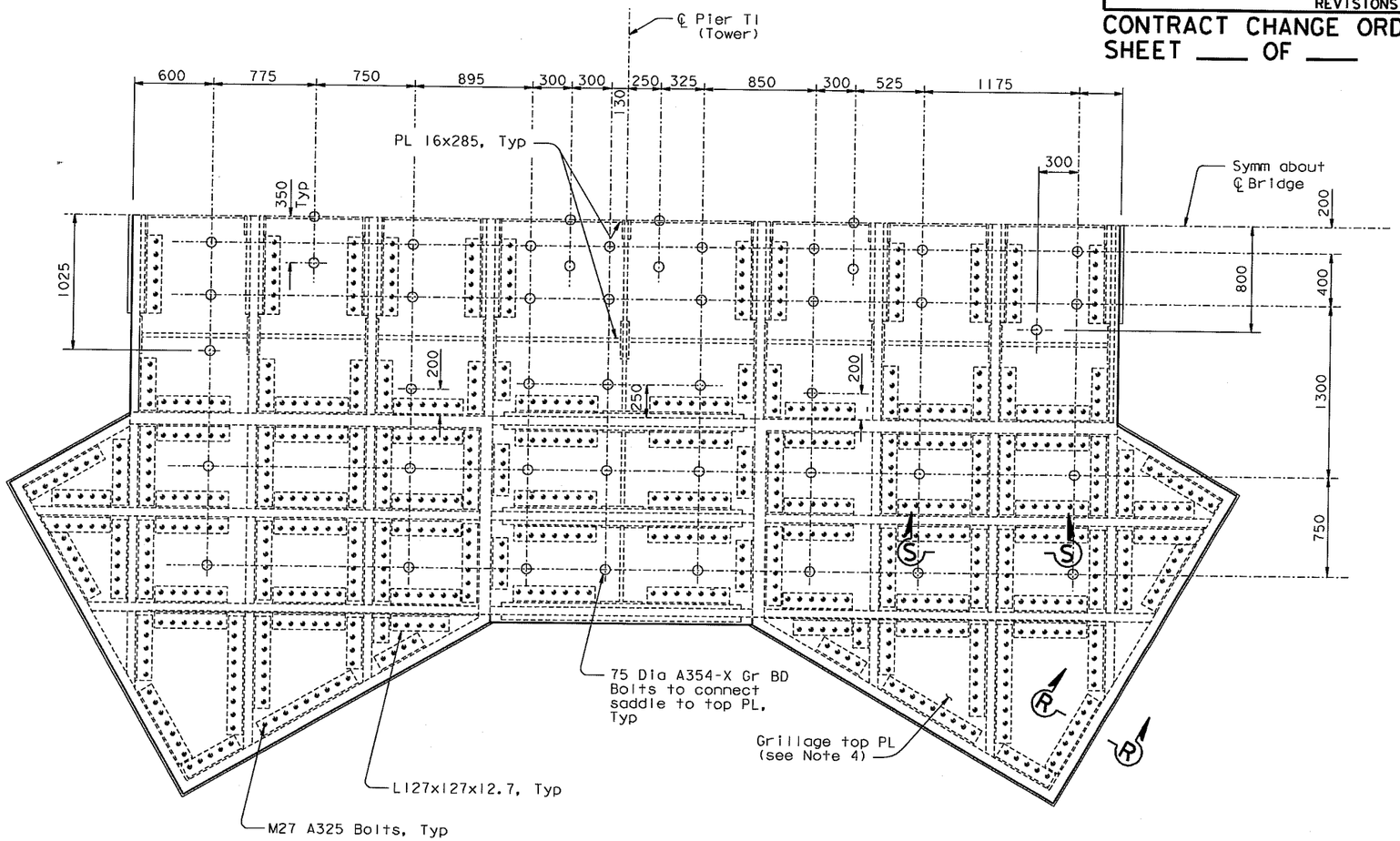

SECTION E-E (Partial Section at grillage top PL, Elev 151.000 m)

1:20

NOTE: All 75 mm Dia bolt locations shall be field verified for conformance with the bolt pattern shown above and for any adjustments to that pattern as approved by the Engineer. See Note 4 on "Tower Saddle Details No. 4" sheet.

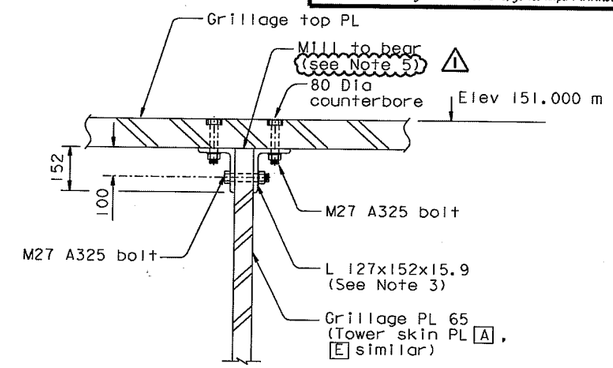

SECTION S-S

1:10

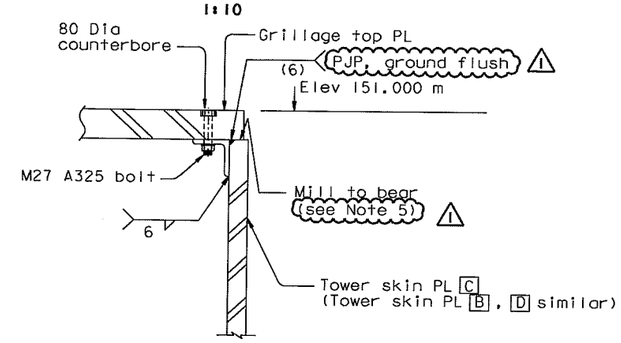

SECTION R-R

1:10

NOTES:

1. For saddle details, see "Tower Saddle Details" sheets.
2. For tower head details, see "Tower Head Details" sheets.
3. Angle shall be fabricated from L152x152x15.9.
4. Grillage top PL shall be flat to +0.5 mm per meter of surface and shall have an ANSI 250 roughness. See Note 4 on "Tower Saddle Details No. 3" sheet.
5. 1 Shimming will not be permitted below grillage top PL.

5 **REVISED PER ADDENDUM NO. 5 DATED DECEMBER 21, 2005**

ALL DIMENSIONS ARE IN MILLIMETERS UNLESS OTHERWISE SHOWN

100 % PS&E

DATE PLOTTED => 24 APR 2007 TIME PLOTTED => 08:37:57

USERNAME => ptom

R. Valizadeh/V. Toan/Y.L./W.L./F.C.
DESIGN OVERSIGHT
Roger Valizadeh / Vong Toan / Y. Liu
SIGN OFF DATE 06/23/06
Rev. Date: 5-18-98

	BY	CHECKED
DESIGN	M. Nader	R. Mayrbauri
DETAILS	R. Kanitkar	R. Mayrbauri
QUANTITIES	R. Kanitkar	Y. Zhang

PREPARED FOR THE STATE OF CALIFORNIA DEPARTMENT OF TRANSPORTATION

R. Manzanarez
PROJECT ENGINEER

BRIDGE NO. 34-0006L/R
KILOMETER POST 13.2/13.9

SAN FRANCISCO OAKLAND BAY BRIDGE
EAST SPAN SEISMIC SAFETY PROJECT
SELF-ANCHORED SUSPENSION BRIDGE
(SUPERSTRUCTURE & TOWER)

TOWER SADDLE GRILLAGE DETAILS NO.8

ORIGINAL SCALE IN MILLIMETERS FOR REDUCED PLANS 0 10 20 30 40 50 60 70 80 90 100

CU 04
EA 0120F1

DISREGARD PRINTS BEARING EARLIER REVISION DATES

REVISION DATES (PRELIMINARY STAGE ONLY) 08/02/99 05/31/01 04/08/02 07/01/02 12/19/02 09/06/04

SHEET 195R1 OF

FILE => I:\bb\04-012001\sas\contract plans and cco\cco\cco#21\aecsg08.dgn

DIST.	COUNTY	ROUTE	KILOMETER POST TOTAL PROJECT	SHEET NO.	TOTAL SHEETS
04	SF	80	13.2/13.9	656R1	1204

George Baker
REGISTERED ENGINEER - CIVIL

1-27-03
PLANS APPROVAL DATE

The State of California or its officers or agents shall not be responsible for the accuracy or completeness of electronic copies of this plan sheet.

REGISTERED PROFESSIONAL ENGINEER George S. Baker No. C57112 Exp. 12/31/07 CIVIL STATE OF CALIFORNIA

T.Y. LIN / MOFFATT & NICHOL
825 BATTERY STREET
SAN FRANCISCO, CA 94111

To get to the web site, go to http://www.dot.ca.gov

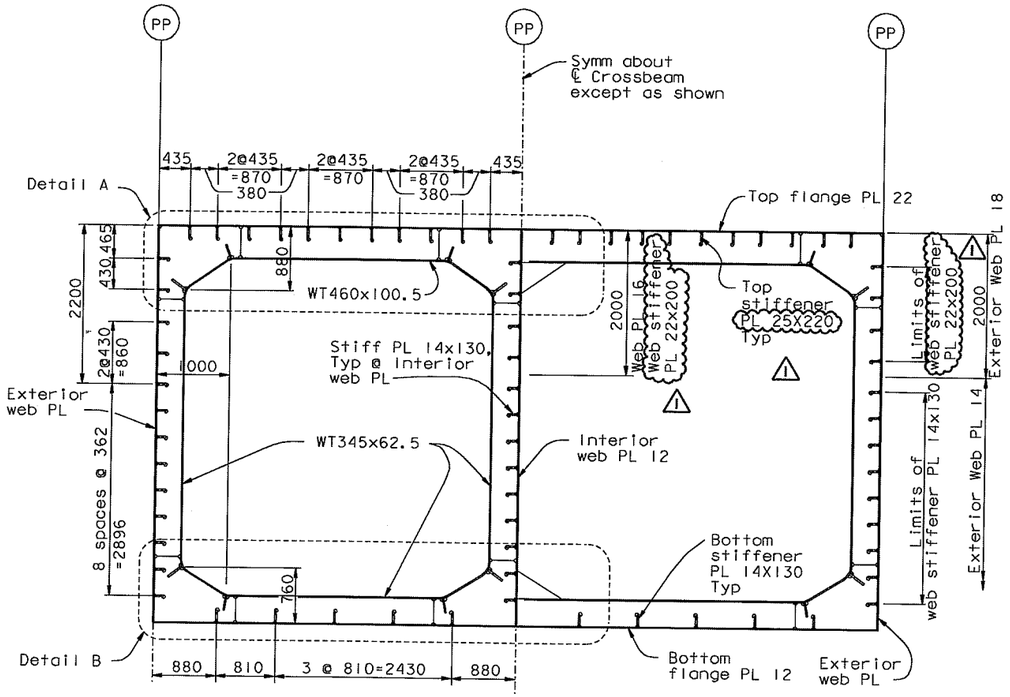

TYPICAL DIAPHRAGM
SECTION A-A
1:40

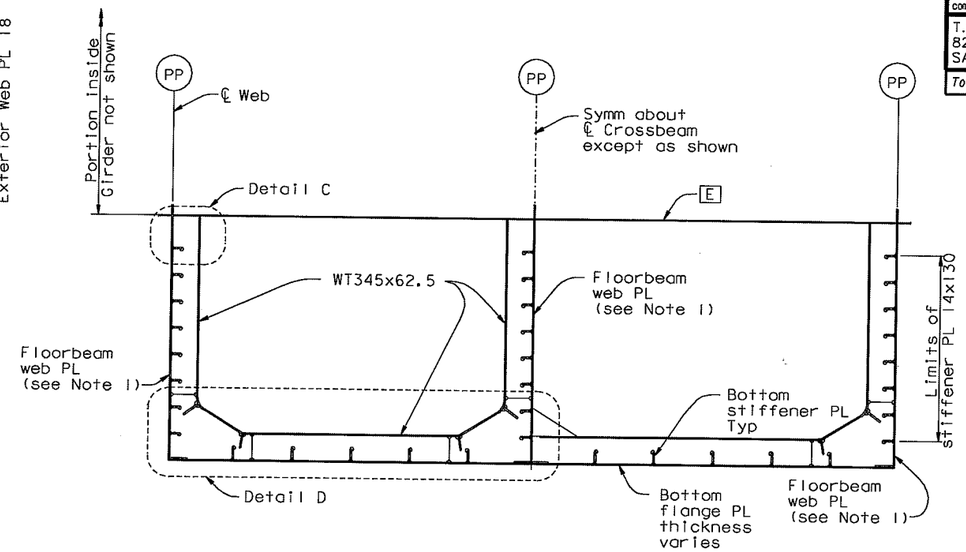

PARTIAL HEIGHT DIAPHRAGM
SECTION A'-A'
1:40

MARK	DATE	DESCRIPTIONS	BY	CH'D	CCO#
1	06/23/06	STIFFENER SIZE INCREASE	GB	NV	21

REVISIONS

CONTRACT CHANGE ORDER NO. ____
SHEET ____ OF ____

NOTES:

1. For floorbeam webs, see "Typical Floorbeam Details No. 2" sheet.
2. For Details A and B, see "Typical Crossbeam Details No. 3" sheet.
3. For Details C and D, see "Typical Crossbeam Details No. 4" sheet.

100 % PS&E

ALL DIMENSIONS ARE IN MILLIMETERS UNLESS OTHERWISE SHOWN

R. Valizadeh/V. Toan/Y.L./W.L./F.C.
DESIGN OVERSIGHT
SIGN OFF DATE 06/23/06
Rev. Date: 5-18-98

DESIGN	BY G. Baker	CHECKED	P. Ritchie
DETAILS	BY D. Veytsman	CHECKED	T. McMeans
QUANTITIES	BY G. Baker	CHECKED	M. Roberts

PREPARED FOR THE STATE OF CALIFORNIA DEPARTMENT OF TRANSPORTATION

R. Manzanarez
PROJECT ENGINEER

BRIDGE NO. 34-0006L/R
KILOMETER POST 13.2/13.9

SAN FRANCISCO OAKLAND BAY BRIDGE
EAST SPAN SEISMIC SAFETY PROJECT
SELF-ANCHORED SUSPENSION BRIDGE
(SUPERSTRUCTURE & TOWER)

TYPICAL CROSSBEAM DETAILS NO. 2

ORIGINAL SCALE IN MILLIMETERS FOR REDUCED PLANS 0 10 20 30 40 50 60 70 80 90 100

CU 04
EA 0120F1

DISREGARD PRINTS BEARING EARLIER REVISION DATES

REVISION DATES (PRELIMINARY STAGE ONLY) 08/02/99 05/31/01 04/08/02 07/01/02 12/19/02

SHEET 239R1 OF

FILE => I:\bb\04-012001\sas\contract plans and cco\cco\cco#21\agcrs02.dgn

USERNAME => ptom DATE PLOTTED => 24 APR 2007 TIME PLOTTED => 08:39:46

NOTES:

1. For Details C, D and E, and Section D-D, see "Typical Crossbeam Details No. 6" sheet.
2. For stiffener termination detail, see "Typical Crossbeam Details No. 6" sheet.
3. For Detail J, see "Typical Crossbeam Details No. 10" sheet.

LEGEND:

"Indicates SPCM web plate"

"Indicates SPCM & TTP web plate"

Caltrans Metric

DIST.	COUNTY	ROUTE	KILOMETER POST TOTAL PROJECT	SHEET NO.	TOTAL SHEETS
04	SF	80	13.2/13.9	659R1	1204

George Baker
REGISTERED ENGINEER - CIVIL
1-27-03
PLANS APPROVAL DATE

REGISTERED PROFESSIONAL ENGINEER George S. Baker No. C 57112 Exp. 12/31/07 CIVIL STATE OF CALIFORNIA

The State of California or its officers or agents shall not be responsible for the accuracy or completeness of electronic copies of this plan sheet.

T.Y. LIN / MOFFATT & NICHOL
825 BATTERY STREET
SAN FRANCISCO, CA 94111

Caltrans now has a web site! To get to the web site, go to http://www.dot.ca.gov

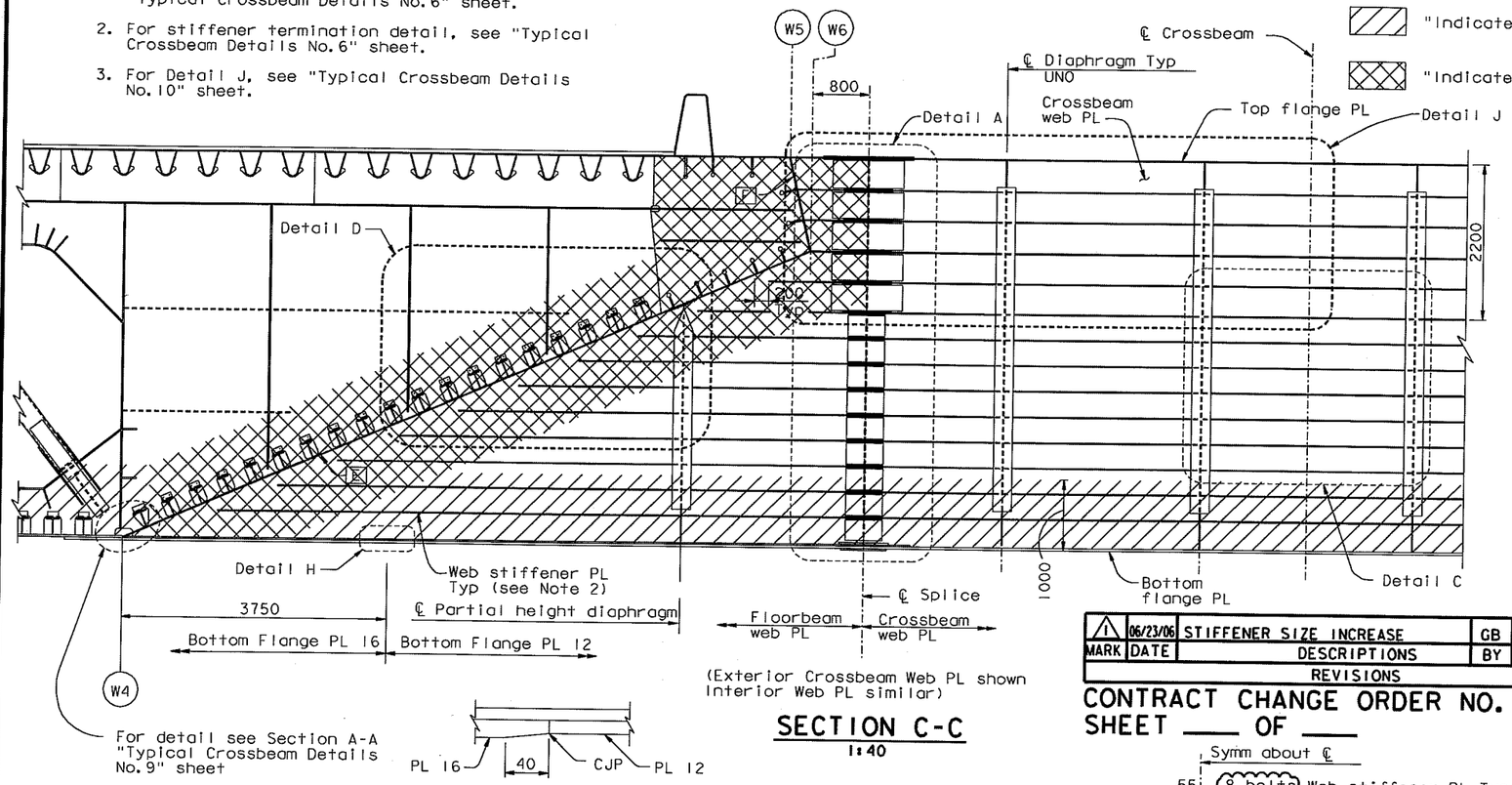

(Exterior Crossbeam Web PL shown Interior Web PL similar)

SECTION C-C
1:40

MARK	DATE	DESCRIPTIONS	BY	CH'D	CCO#
1	06/23/06	STIFFENER SIZE INCREASE	GB	NV	21

REVISIONS

CONTRACT CHANGE ORDER NO. ____
SHEET ____ OF ____

DETAIL H
1:2.5

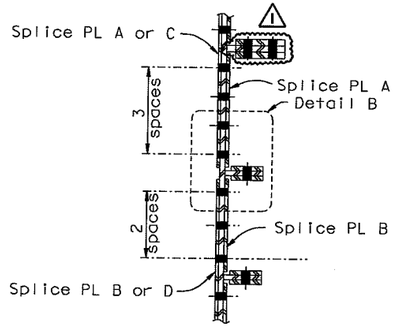

SECTION A-A
1:10

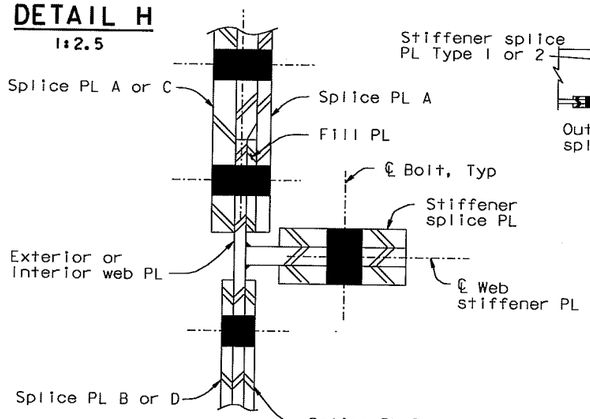

DETAIL B
1:2.5

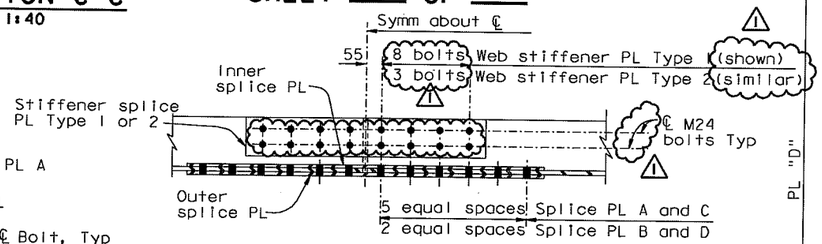

SECTION B-B
1:10

SPLICE PLATE TABLE	
Plate Type	Dimensions
Inner Side PL "A"	PL 14x1000x390
Inner Side PL "B"	PL 10x520x310
Outer Side PL "C"	PL 20x1000x1980
Outer Side PL "D"	PL 14x520x3400
Web Stiff PL Type 1	PL 22x170x820
Web Stiff PL Type 2	PL 14x110x560

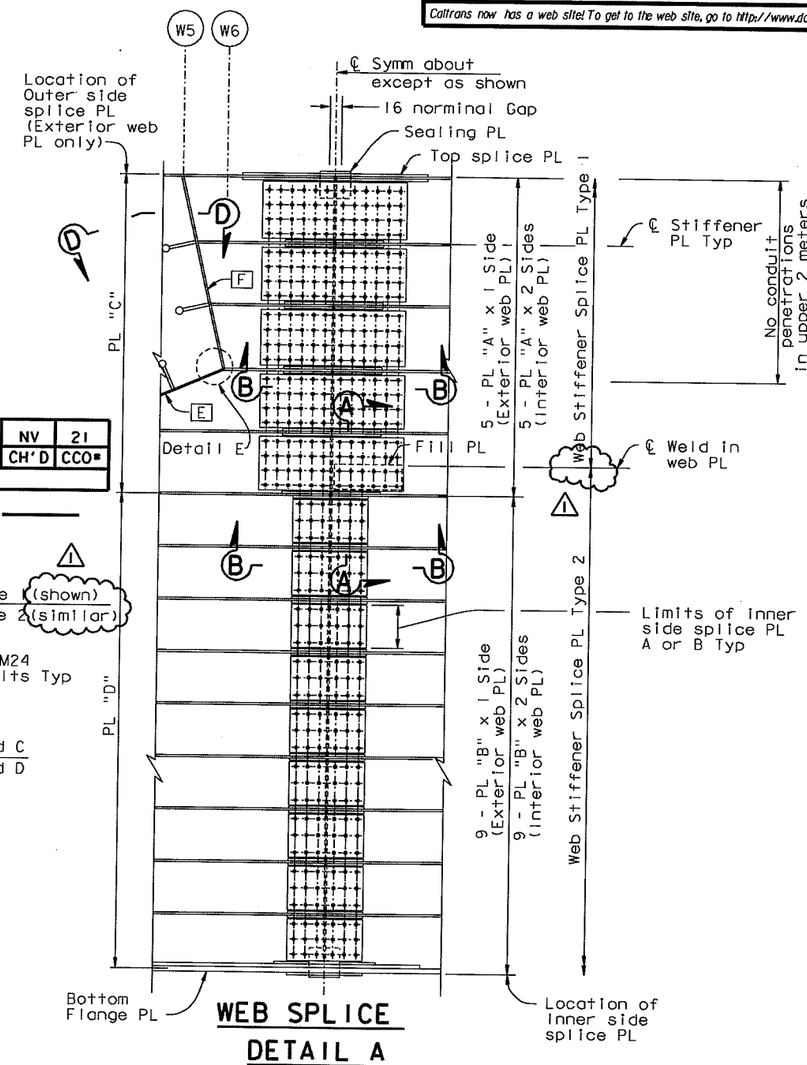

WEB SPLICE
DETAIL A
1:20

ALL DIMENSIONS ARE IN MILLIMETERS UNLESS OTHERWISE SHOWN

R. Valizadeh/V. Toan/Y.L./W.L./F.C.
DESIGN OVERSIGHT
Reza Valizadeh / Vong Toan / Y. Liu
SIGN OFF DATE 06/23/06
Rev. Date: 5-18-98

	BY	CHECKED
DESIGN	G. Baker	P. Ritchie
DETAILS	D. Veytsman	T. McMeans
QUANTITIES	G. Baker	M. Roberts

PREPARED FOR THE STATE OF CALIFORNIA DEPARTMENT OF TRANSPORTATION

R. Manzanarez
PROJECT ENGINEER

BRIDGE NO. 34-0006L/R
KILOMETER POST 13.2/13.9

SAN FRANCISCO OAKLAND BAY BRIDGE
EAST SPAN SEISMIC SAFETY PROJECT
SELF-ANCHORED SUSPENSION BRIDGE
(SUPERSTRUCTURE & TOWER)

TYPICAL CROSSBEAM DETAILS NO. 5

ORIGINAL SCALE IN MILLIMETERS FOR REDUCED PLANS 0 10 20 30 40 50 60 70 80 90 100

CU 04
EA 0120F1

DISREGARD PRINTS BEARING EARLIER REVISION DATES

REVISION DATES (PRELIMINARY STAGE ONLY) 08/08/99 05/24/01 04/08/02 07/08/02 12/19/03

SHEET 242R1 OF

FILE => I:\bb\04-012001\sas\contract plans and cco\cco\cco*21\agcrs07.dgn

100 % PS&E

DATE PLOTTED => 24 APR 2007 TIME PLOTTED => 08:41:34

USERNAME => ptom

DIST.	COUNTY	ROUTE	KILOMETER POST TOTAL PROJECT	SHEET NO.	TOTAL SHEETS
04	SF	80	13.2/13.9	661R1	1204

Caltrans Metric

George Baker
REGISTERED ENGINEER - CIVIL

12-6-04
PLANS APPROVAL DATE

REGISTERED PROFESSIONAL ENGINEER George S. Baker No. C57112 Exp. 12/31/07 CIVIL STATE OF CALIFORNIA

The State of California or its officers or agents shall not be responsible for the accuracy or completeness of electronic copies of this plan sheet.

T.Y. LIN / MOFFATT & NICHOL
825 BATTERY STREET
SAN FRANCISCO, CA 94111

Caltrans now has a web site! To get to the web site, go to: http://www.dot.ca.gov

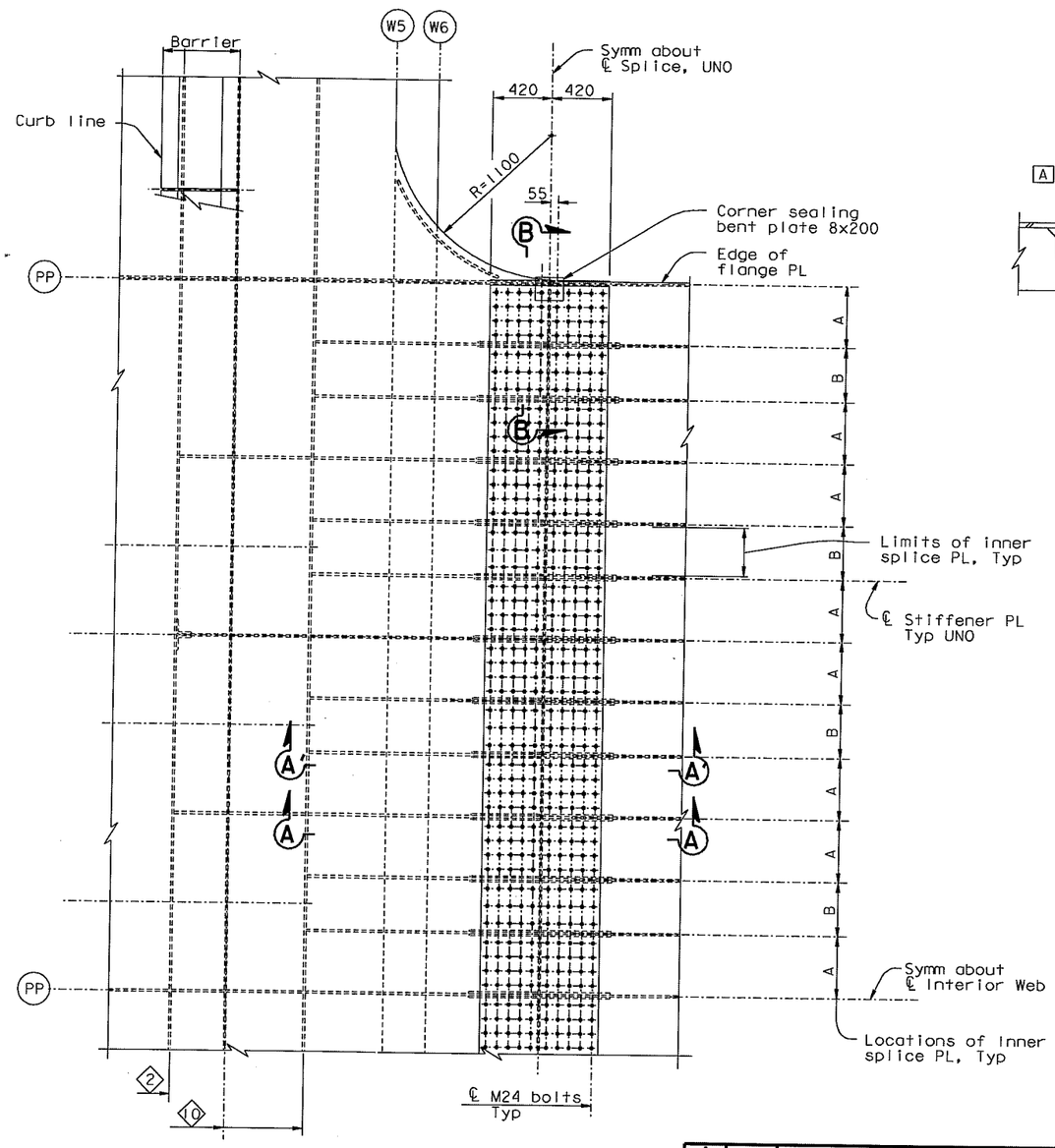

TOP FLANGE SPLICE
DETAIL E
1:20

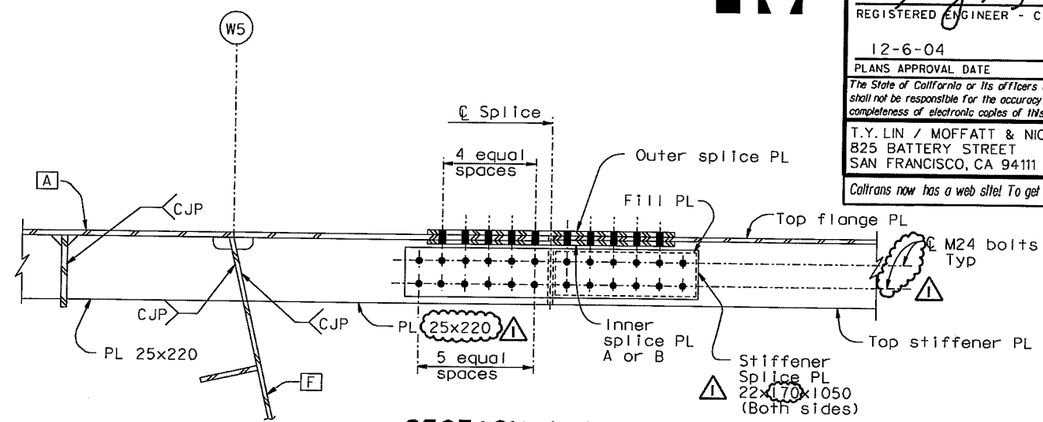

SECTION A-A
1:10
(SECTION A'-A' SIMILAR)

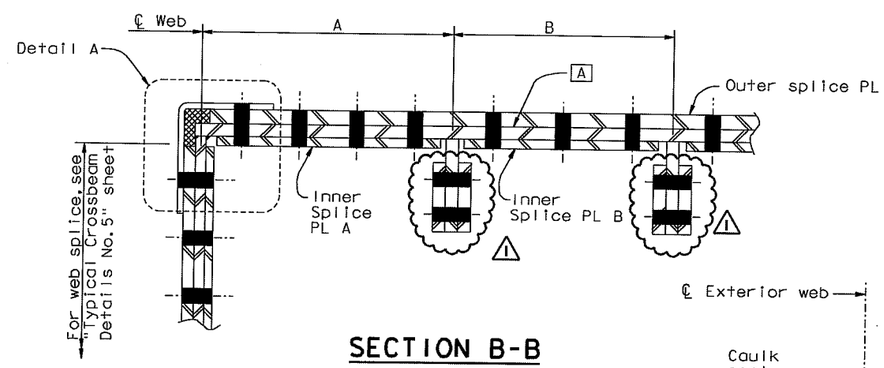

SECTION B-B
1:5

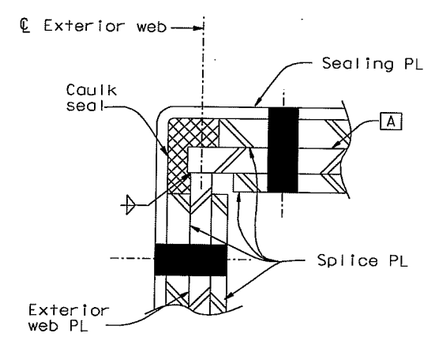

DETAIL A
1:2.5

SPLICE PLATE TABLE	
Plate Type	Dimensions
Inner PL "A"	PL 16x840x375
Inner PL "B"	PL 16x840x320
Outer PL	PL 25x840x9960

MARK	DATE	DESCRIPTIONS	BY	CH'D	CCO#
1	06/23/06	STIFFENER SIZE INCREASE	GB	NV	21

REVISIONS

CONTRACT CHANGE ORDER NO. ____
SHEET ____ OF ____

ALL DIMENSIONS ARE IN MILLIMETERS UNLESS OTHERWISE SHOWN

R. Valizadeh/V. Toan/Y.L./W.L./F.C.
DESIGN OVERSIGHT
Roger Valizadeh / Vong Toan / Y Liu
SIGN OFF DATE 06/23/06
Rev. Date: 5-18-98

	BY	CHECKED
DESIGN	G. Baker	P. Ritchie
DETAILS	S. Camo	T. McMeans
QUANTITIES	G. Baker	M. Roberts

PREPARED FOR THE STATE OF CALIFORNIA DEPARTMENT OF TRANSPORTATION

R. Manzanarez
PROJECT ENGINEER

BRIDGE NO. 34-0006L/R
KILOMETER POST 13.2/13.9

SAN FRANCISCO OAKLAND BAY BRIDGE
EAST SPAN SEISMIC SAFETY PROJECT
SELF-ANCHORED SUSPENSION BRIDGE
(SUPERSTRUCTURE & TOWER)

TYPICAL CROSSBEAM DETAILS NO. 7

ORIGINAL SCALE IN MILLIMETERS FOR REDUCED PLANS 0 10 20 30 40 50 60 70 80 90 100

CU 04
EA 0120F1

DISREGARD PRINTS BEARING EARLIER REVISION DATES

REVISION DATES (PRELIMINARY STAGE ONLY) 05/15/99 08/02/99 05/31/01 04/08/02 07/01/02 12/19/02

SHEET 244R1 OF

FILE => I:\bb\04-012001\sas\contract plans and cco\cco\cco#21\agcrs05.dgn

100 % PS&E

USERNAME => ptom DATE PLOTTED => 24 APR 2007 TIME PLOTTED => 08:42:57