DIST.	COUNTY	ROUTE	KILOMETER POST TOTAL PROJECT	SHEET NO.	TOTAL SHEETS
04	SF	80	13.2/13.9	612R1	1204

Caltrans Metric

REGISTERED ENGINEER - CIVIL

1-27-03
PLANS APPROVAL DATE

REGISTERED PROFESSIONAL ENGINEER Marwan N. Nader No. C 054426 Exp. 12/31/07 CIVIL STATE OF CALIFORNIA

The State of California or its officers or agents shall not be responsible for the accuracy or completeness of electronic copies of this plan sheet.

T.Y. LIN / MOFFATT & NICHOL
825 BATTERY STREET
SAN FRANCISCO, CA 94111

To get to the web site, go to: http://www.dot.ca.gov

MARK	DATE	DESCRIPTIONS	BY	CH'D	CCO#
1	06/23/06	SHIM/MILL TO BEAR AT TOWER GRILLAGE	MN	NV	21

REVISIONS

CONTRACT CHANGE ORDER NO. ____
SHEET ___ OF ___

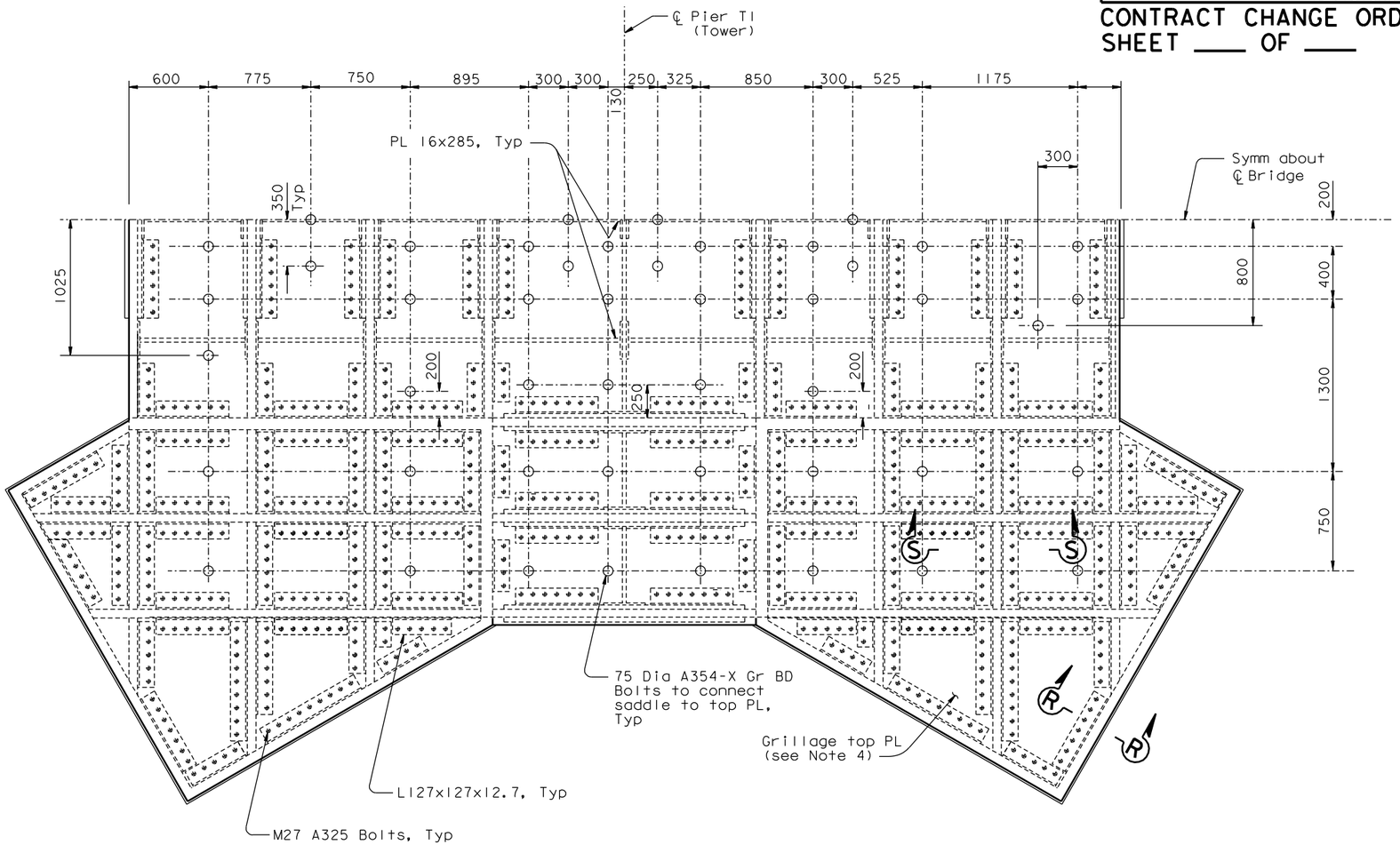

SECTION E-E
1:20

(Partial Section at grillage top PL, Elev 151.000 m)

NOTE: All 75 mm Dia bolt locations shall be field verified for conformance with the bolt pattern shown above and for any adjustments to that pattern as approved by the Engineer. See Note 4 on "Tower Saddle Details No.4" sheet.

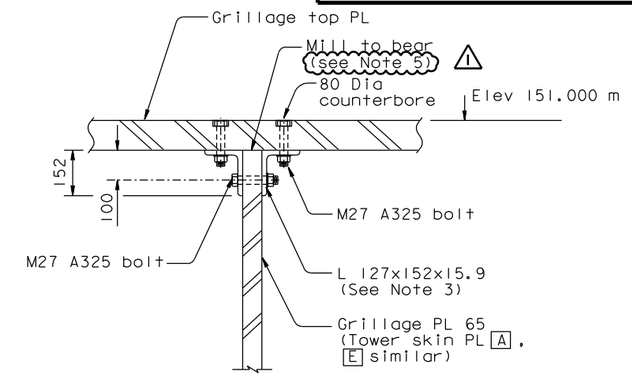

SECTION S-S
1:10

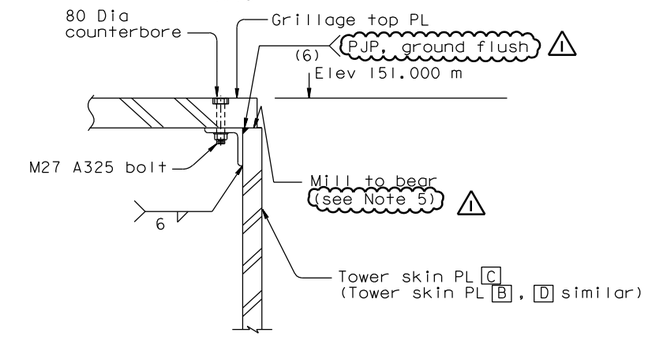

SECTION R-R
1:10

NOTES:

1. For saddle details, see "Tower Saddle Details" sheets.
2. For tower head details, see "Tower Head Details" sheets.
3. Angle shall be fabricated from L152x152x15.9.
4. Grillage top PL shall be flat to +0.5 mm per meter of surface and shall have an ANSI 250 roughness. See Note 4 on "Tower Saddle Details No.3" sheet.
5. 1 Shimming will not be permitted below grillage top PL.

5 **REVISED PER ADDENDUM NO. 5 DATED DECEMBER 21, 2005**

ALL DIMENSIONS ARE IN MILLIMETERS UNLESS OTHERWISE SHOWN

R. Valizadeh/V. Toan/Y.L./W.L./F.C.
DESIGN OVERSIGHT
Roya Valizadeh / Vong D. Toan / Y. Liu
SIGN OFF DATE 06/23/06

	BY	CHECKED
DESIGN	M. Nader	R. Mayrbauri
DETAILS	R. Kanitkar	R. Mayrbauri
QUANTITIES	R. Kanitkar	Y. Zhang

PREPARED FOR THE STATE OF CALIFORNIA DEPARTMENT OF TRANSPORTATION

R. Manzanarez
PROJECT ENGINEER

BRIDGE NO. 34-0006L/R
KILOMETER POST 13.2/13.9

SAN FRANCISCO OAKLAND BAY BRIDGE
EAST SPAN SEISMIC SAFETY PROJECT
SELF-ANCHORED SUSPENSION BRIDGE
(SUPERSTRUCTURE & TOWER)

TOWER SADDLE GRILLAGE DETAILS NO.8

Rev. Date: 5-18-98

ORIGINAL SCALE IN MILLIMETERS FOR REDUCED PLANS 0 10 20 30 40 50 60 70 80 90 100

CU 04
EA 0120F1

DISREGARD PRINTS BEARING EARLIER REVISION DATES

REVISION DATES (PRELIMINARY STAGE ONLY): 08/07/99 05/31/01 04/08/02 07/01/02 12/19/02 09/06/04

SHEET 195R1 OF

FILE => I:\bb\04-012001\sas\contract plans and cco\cco\cco#21\aecsg08.dgn

USERNAME => ptom DATE PLOTTED => 24 APR 2007 TIME PLOTTED => 08:37:57

100% PS&E