DIST.	COUNTY	ROUTE	KILOMETER POST TOTAL PROJECT	SHEET NO.	TOTAL SHEETS
04	SF	80	13.2/13.9	584R1	1204

REGISTERED ENGINEER - CIVIL

12-6-04
PLANS APPROVAL DATE

REGISTERED PROFESSIONAL ENGINEER Marwan N. Nader No. C 054426 Exp. 12/31/07 CIVIL STATE OF CALIFORNIA

The State of California or its officers or agents shall not be responsible for the accuracy or completeness of electronic copies of this plan sheet.

T.Y. LIN / MOFFATT & NICHOL
825 BATTERY STREET
SAN FRANCISCO, CA 94111

To get to the web site, go to: http://www.dot.ca.gov

Caltrans Metric

4

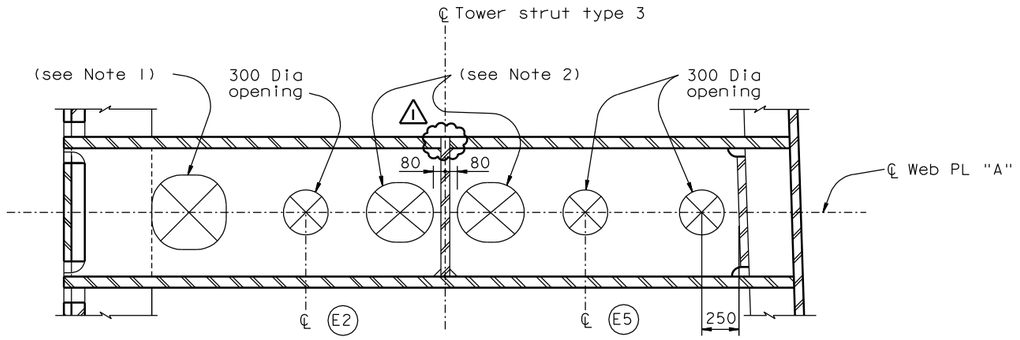

Elev 18 m

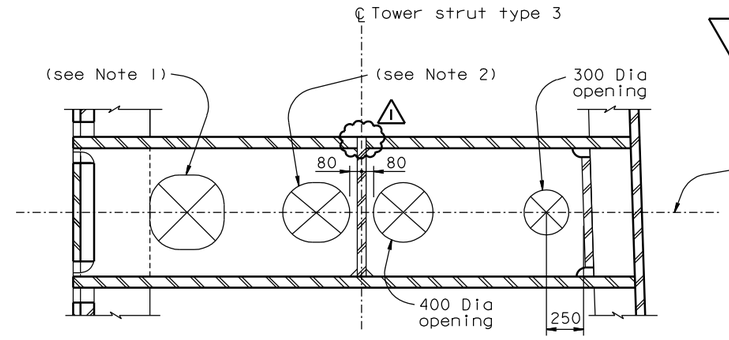

Elev 47.6 m shown
Elev 53 m similar

MARK	DATE	DESCRIPTIONS	BY	CH'D	CCO#
1	06/23/06	WEB PLATE THRU DIAPHRAGM PLATE	MN	NV	21

REVISIONS

CONTRACT CHANGE ORDER NO. ____
SHEET ____ OF ____

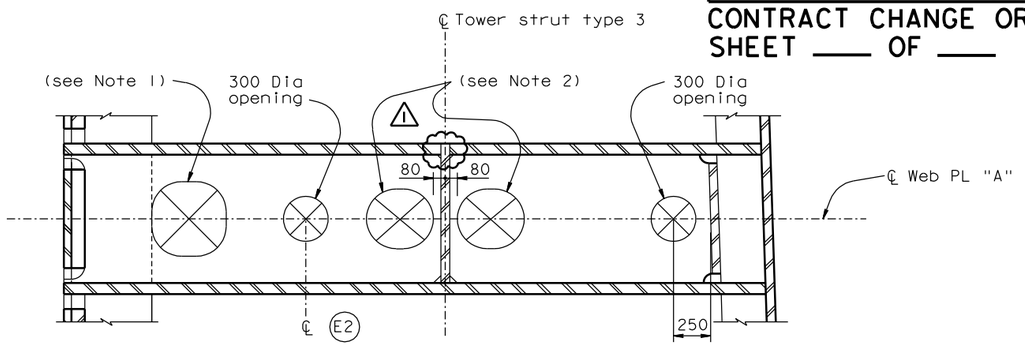

Elev 23 m shown
Elev 28 and 33 m similar

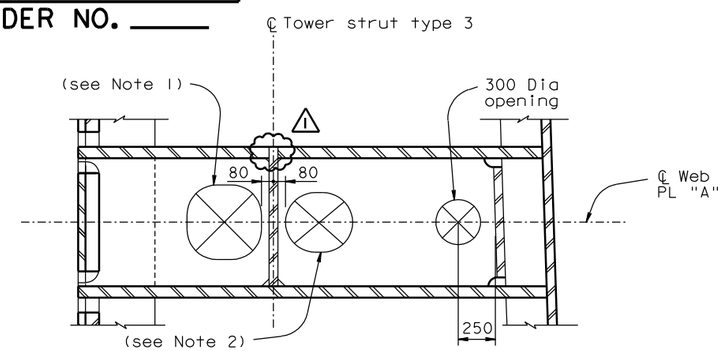

Elev 65 m

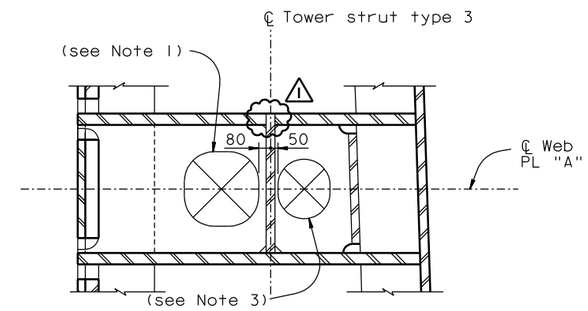

Elev 89 m shown
Elev 99, 109 & 119 m similar

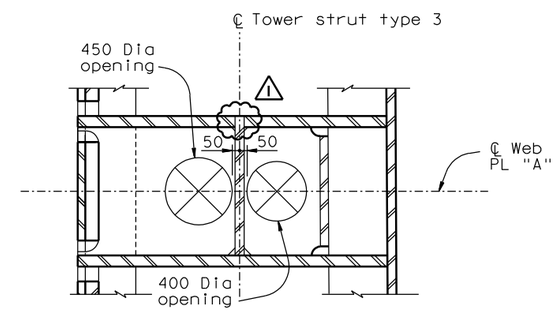

Elev 123 m shown
Elev 127, 131, 135, 139 & 143 m similar

4 **REVISED PER ADDENDUM NO. 4 DATED DECEMBER 9, 2005**

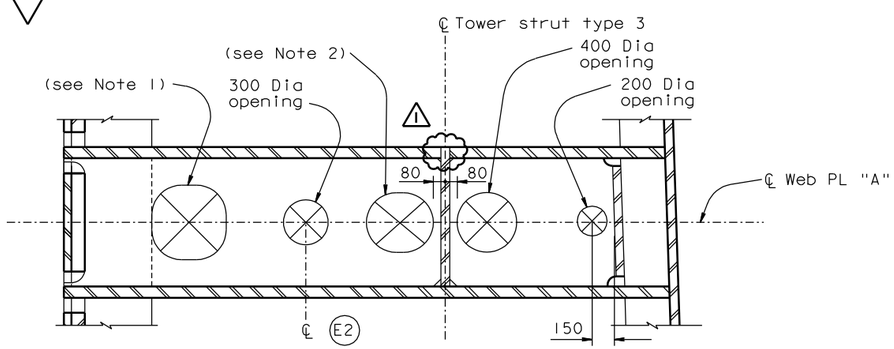

Elev 43 m shown
Elev 38 m similar

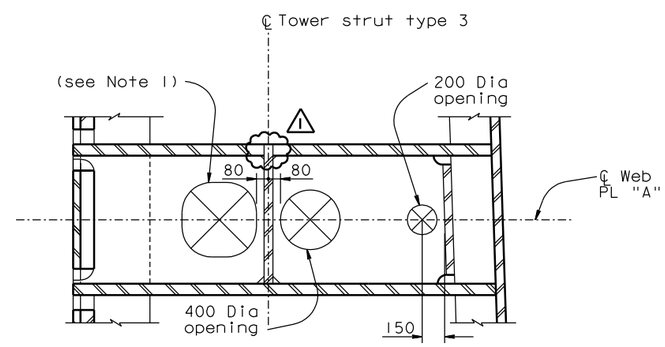

Elev 77 m

LEGEND:
- (E2) Tower rib E2
- ⊗ Access opening

NOTES:

3 1. Access opening is 500x500. See Detail A on "Tower Diaphragm Details No. 10" sheet.

3 2. Access opening is 400x450. See Detail B on "Tower Diaphragm Details No. 10" sheet.

3 3. Access opening is 350x450. See Detail C on "Tower Diaphragm Details No. 10" sheet.

3 **REVISED PER ADDENDUM NO. 3 DATED NOVEMBER 7, 2005**

SECTION A-A (Web PL "A" access openings)
1:20

ALL DIMENSIONS ARE IN MILLIMETERS UNLESS OTHERWISE SHOWN

SAN FRANCISCO OAKLAND BAY BRIDGE
EAST SPAN SEISMIC SAFETY PROJECT
SELF-ANCHORED SUSPENSION BRIDGE
(SUPERSTRUCTURE & TOWER)

TOWER DIAPHRAGM DETAILS NO. 9

R. Valizadeh/V. Toan/Y.L./W.L./F.C.
DESIGN OVERSIGHT
Roya Valizadeh / Vong Toan / Y. Liu
SIGN OFF DATE 06/23/06

	BY	CHECKED
DESIGN	M. Nader	J. Duxbury
DETAILS	G. Baker	J. Duxbury
QUANTITIES	G. Baker	J. Duxbury

PREPARED FOR THE STATE OF CALIFORNIA DEPARTMENT OF TRANSPORTATION

R. Manzanarez
PROJECT ENGINEER

BRIDGE NO. 34-0006L/R
KILOMETER POST 13.2/13.9

Rev. Date: 5-18-98

ORIGINAL SCALE IN MILLIMETERS FOR REDUCED PLANS 0 10 20 30 40 50 60 70 80 90 100

CU 04
EA 0120F1

DISREGARD PRINTS BEARING EARLIER REVISION DATES → 04/19/04 10/13/05 11/13/05

SHEET 167R1 OF

FILE => I:\bb\04-012001\sas\contract plans and cco\cco\cco#21\aetdh15.dgn

100% PS&E
DATE PLOTTED => 23 APR 2007 TIME PLOTTED => 16:44:25
USERNAME => ptom