DIST.	COUNTY	ROUTE	KILOMETER POST TOTAL PROJECT	SHEET NO.	TOTAL SHEETS
04	SF	80	13.2/13.9	581R1	1204

Caltrans Metric

4

REGISTERED ENGINEER - CIVIL

12-6-04
PLANS APPROVAL DATE

REGISTERED PROFESSIONAL ENGINEER Marwan N. Nader No. C 054426 Exp. 12/31/07 CIVIL STATE OF CALIFORNIA

The State of California or its officers or agents shall not be responsible for the accuracy or completeness of electronic copies of this plan sheet.

T.Y. LIN / MOFFATT & NICHOL
825 BATTERY STREET
SAN FRANCISCO, CA 94111

To get to the web site, go to: http://www.dot.ca.gov

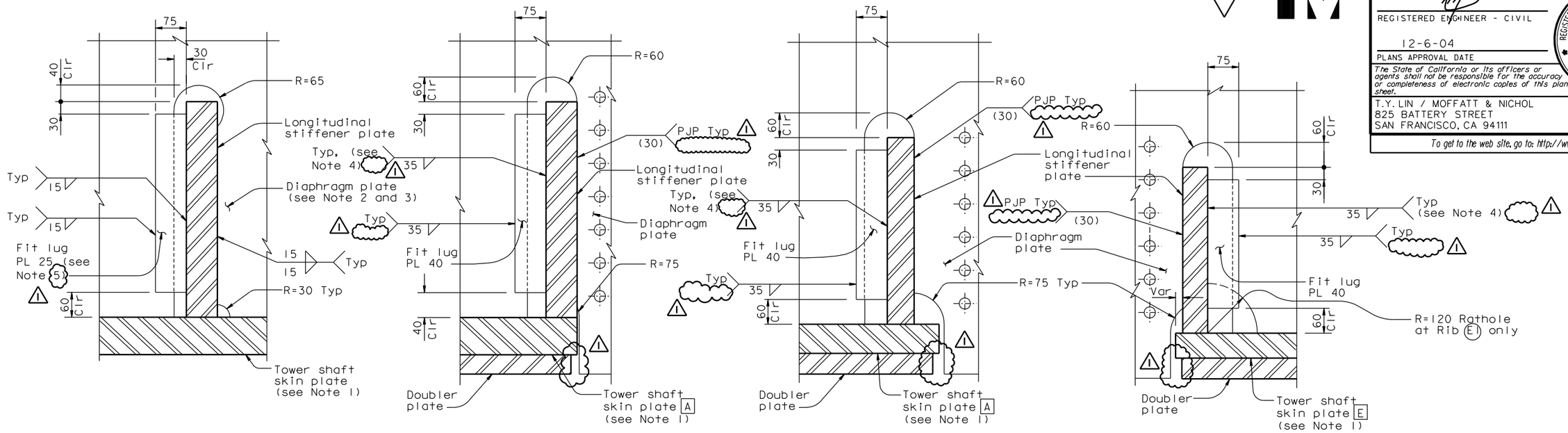

TYPICAL COPE DETAILS
(Unless noted otherwise)

COPE DETAILS AT TOWER STRUT TYPES 1 AND 2

COPE DETAILS AT TOWER STRUT TYPE 3

DETAIL A (See Note 1)
1:5

4 REVISED PER ADDENDUM NO. 4 DATED DECEMBER 9, 2005

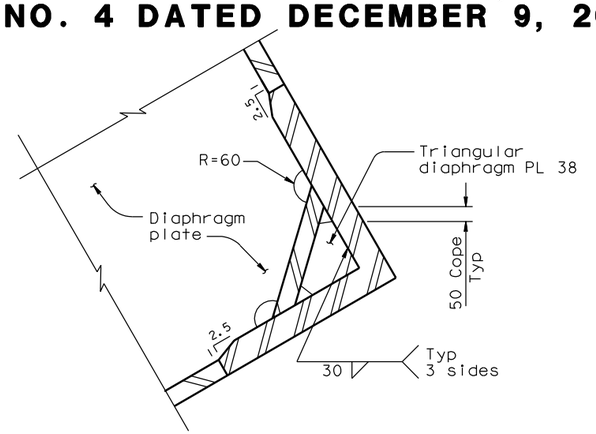

DETAIL B
1:10

3 REVISED PER ADDENDUM NO. 3 DATED NOVEMBER 7, 2005

DIAPHRAGM COPE DETAILS

MARK	DATE	DESCRIPTIONS	BY	CH'D	CCO#
1	06/23/06	DELETE OVERMATCHING METAL NOTE	MN	NV	21

REVISIONS

CONTRACT CHANGE ORDER NO. _____
SHEET ____ OF ____

NOTES:

1. For details of skin plate and longitudinal stiffeners, see "Tower Shaft Details" sheets.
2. For diaphragm plate thickness, see "Tower Diaphragm Details No.2" through "Tower Diaphragm Details No.5" sheets. For diaphragm plate thickness at elevations 9.000 and 13.000, see "Tower Diaphragm Details No.14" sheet.
3. For diaphragm to tower shaft skin plate weld size, see "Tower Diaphragm Details No.11" sheet.
4. An equivalent PJP weld is also an acceptable alternative.
5. Fit lugs are not installed on diaphragm types 1A and 1B.

ALL DIMENSIONS ARE IN MILLIMETERS UNLESS OTHERWISE SHOWN

R. Valizadeh/V. Toan/Y.L./W.L./F.C.
DESIGN OVERSIGHT
SIGN OFF DATE 06/23/06

DESIGN	BY M. Nader	CHECKED M. Gulyas	
DETAILS	BY L. Rus	CHECKED M. Gulyas	
QUANTITIES	BY L. Rus	CHECKED Y. Zhang	

PREPARED FOR THE STATE OF CALIFORNIA DEPARTMENT OF TRANSPORTATION

R. Manzanarez
PROJECT ENGINEER

BRIDGE NO. 34-0006L/R
KILOMETER POST 13.2/13.9

SAN FRANCISCO OAKLAND BAY BRIDGE
EAST SPAN SEISMIC SAFETY PROJECT
SELF-ANCHORED SUSPENSION BRIDGE
(SUPERSTRUCTURE & TOWER)

TOWER DIAPHRAGM DETAILS NO.6

Rev. Date: 5-18-98

ORIGINAL SCALE IN MILLIMETERS FOR REDUCED PLANS 0 10 20 30 40 50 60 70 80 90 100

CU 04
EA 0120F1

DISREGARD PRINTS BEARING EARLIER REVISION DATES

REVISION DATES (PRELIMINARY STAGE ONLY) 05/31/01 09/28/02 07/09/02 12/19/02 10/13/05 11/13/05

SHEET 164R1 OF

FILE => I:\bb\04-012001\sas\contract plans and cco\cco\cco#21\aetdh06.dgn

100% PS&E

DATE PLOTTED => 23 APR 2007 TIME PLOTTED => 16:42:10

USERNAME => ptom