MARK	DATE	DESCRIPTIONS	BY	CH'D	CCO#
1	06/23/06	SPLICE PLATES PER ISM	MN	NV	21

REVISIONS

CONTRACT CHANGE ORDER NO. ____
SHEET ___ OF ___

4

Caltrans Metric

DIST.	COUNTY	ROUTE	KILOMETER POST TOTAL PROJECT	SHEET NO.	TOTAL SHEETS
04	SF	80	13.2/13.9	547R1	1204

REGISTERED ENGINEER - CIVIL

12-6-04
PLANS APPROVAL DATE

REGISTERED PROFESSIONAL ENGINEER Marwan N. Nader No. C 054426 Exp. 12/31/07 CIVIL STATE OF CALIFORNIA

The State of California or its officers or agents shall not be responsible for the accuracy or completeness of electronic copies of this plan sheet.

T.Y. LIN / MOFFATT & NICHOL
825 BATTERY STREET
SAN FRANCISCO, CA 94111

Caltrans now has a web site! To get to the web site, go to: http://www.dot.ca.gov

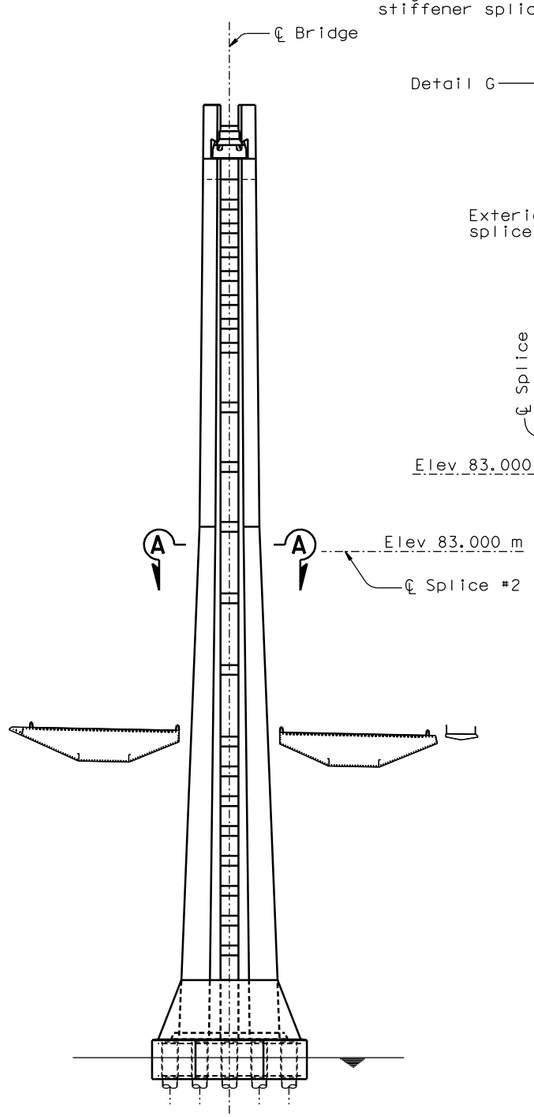

TOWER SPLICE LOCATION
1:500

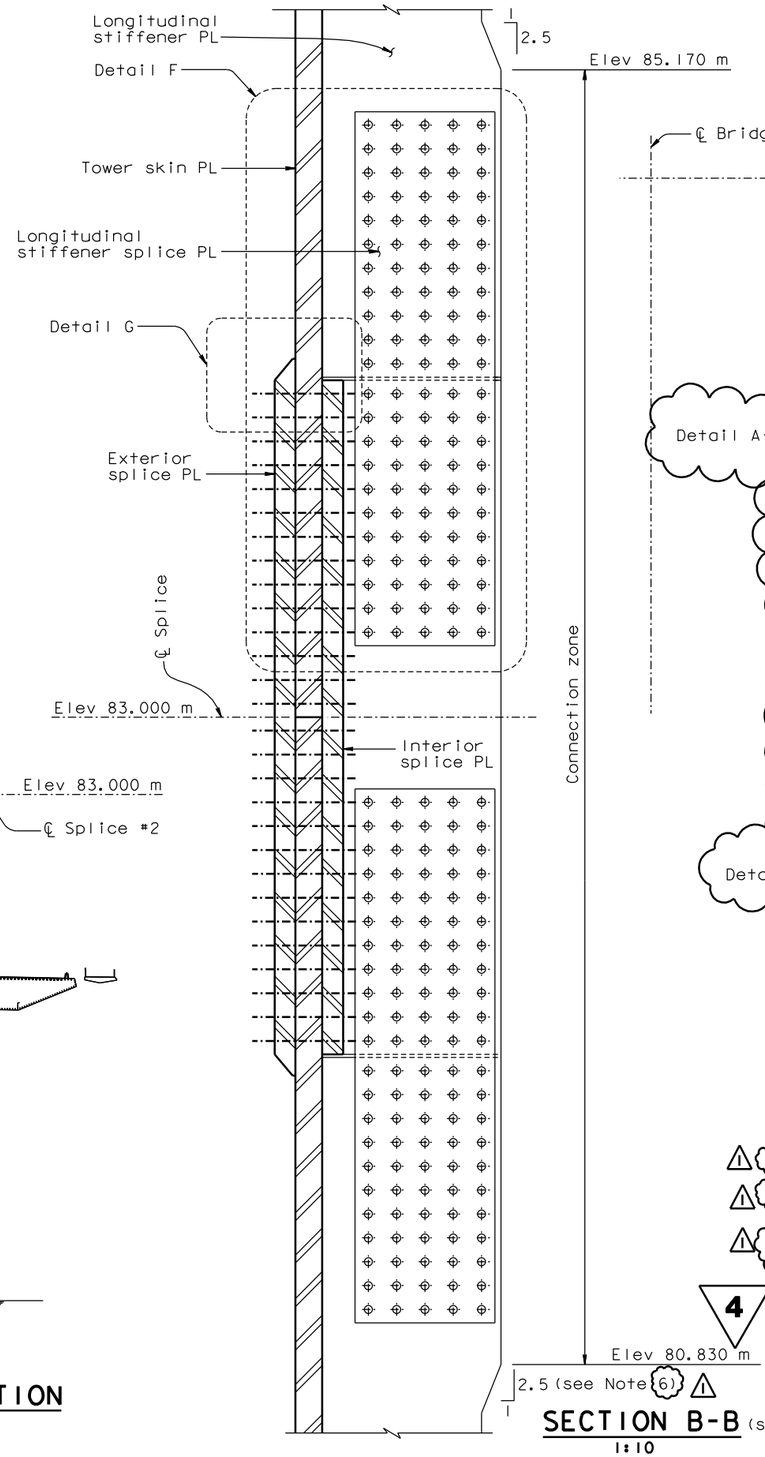

SECTION B-B (see Notes 6 and 7) 1
1:10

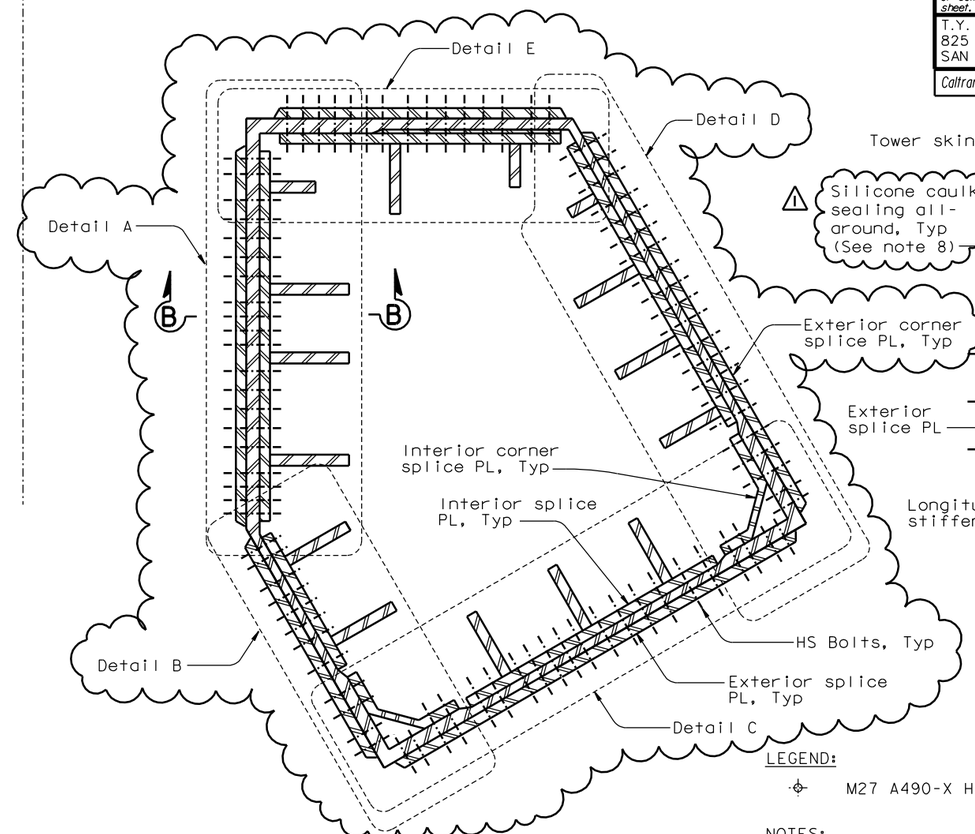

1 SECTION A-A
1:20

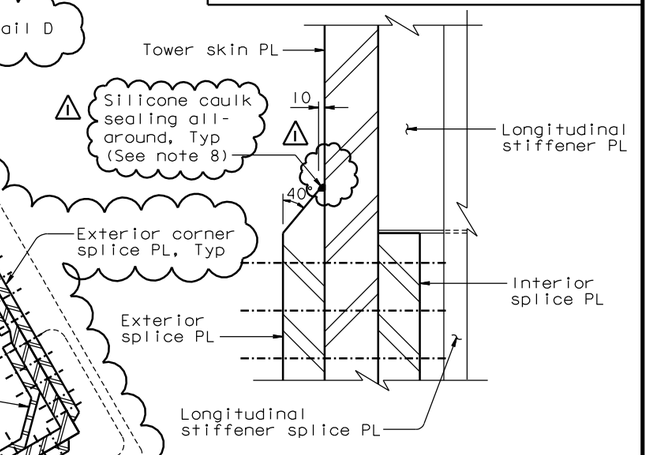

DETAIL G
1:5

TYPICAL TOWER SHAFT SPLICE #2

1 6. Stiffeners A1, E7, and D4 shall not be tapered.

1 7. For stiffeners A1, E2, E7, and D4, see "Tower Splice Details No. 12" sheet. 1

1 8. Silicone caulk sealing shall be applied around the perimeter (horizontal and vertical edges) of all exterior splice plates.

4 **REVISED PER ADDENDUM NO. 4 DATED DECEMBER 9, 2005**

LEGEND:

M27 A490-X HS Bolt

NOTES:

1. For Details A and B, see "Tower Splice Details No. 9" sheet.
2. For Detail C, see "Tower Splice Details No. 10" sheet.
3. For Details D and E, see "Tower Splice Details No. 11" sheet.
4. For Detail F, see "Tower Splice Details No. 12" sheet.
5. The tower splice connections are designed as slip critical connections with class B contact surface (slip coefficient 0.5). The Contractor shall ensure that the flatness requirements are met at the faying surfaces.

1

ALL DIMENSIONS ARE IN MILLIMETERS UNLESS OTHERWISE SHOWN

100% PS&E

DATE PLOTTED => 23 APR 2007 TIME PLOTTED => 16:18:39

R. Valizadeh/V. Toan/Y.L./W.L./F.C.
DESIGN OVERSIGHT
SIGN OFF DATE 06/23/06

DESIGN	BY M. Nader	CHECKED N. Vo	
DETAILS	BY J. Lopez	CHECKED N. Vo	
QUANTITIES	BY J. Lopez	CHECKED N. Vo	

Rev. Date: 5-18-98

ORIGINAL SCALE IN MILLIMETERS FOR REDUCED PLANS 0 10 20 30 40 50 60 70 80 90 100

PREPARED FOR THE STATE OF CALIFORNIA DEPARTMENT OF TRANSPORTATION

R. Manzanarez
PROJECT ENGINEER

BRIDGE NO. 34-0006L/R
KILOMETER POST 13.2/13.9

CU 04
EA 0120F1

DISREGARD PRINTS BEARING EARLIER REVISION DATES

REVISION DATES (PRELIMINARY STAGE ONLY): 05/31/01 04/08/02 07/09/02 12/19/02 11/13/05

SHEET 130R1 OF

SAN FRANCISCO OAKLAND BAY BRIDGE
EAST SPAN SEISMIC SAFETY PROJECT
SELF-ANCHORED SUSPENSION BRIDGE (SUPERSTRUCTURE & TOWER)

TOWER SPLICE DETAILS NO. 8

USERNAME => ptom

FILE => I:\bb\04-012001\sas\contract plans and cco\cco\cco#21\aetsp08.dgn