DIST.	COUNTY	ROUTE	KILOMETER POST TOTAL PROJECT	SHEET NO.	TOTAL SHEETS
04	SF	80	13.2/13.9	561S1	1204

Caltrans Metric

REGISTERED ENGINEER - CIVIL

06-23-06
PLANS APPROVAL DATE

REGISTERED PROFESSIONAL ENGINEER Marwan N. Nader No. C 054426 Exp. 12/31/07 CIVIL STATE OF CALIFORNIA

The State of California or its officers or agents shall not be responsible for the accuracy or completeness of electronic copies of this plan sheet.

T.Y. LIN / MOFFATT & NICHOL
825 BATTERY STREET
SAN FRANCISCO, CA 94111

Caltrans now has a web site! To get to the web site, go to: http://www.dot.ca.gov

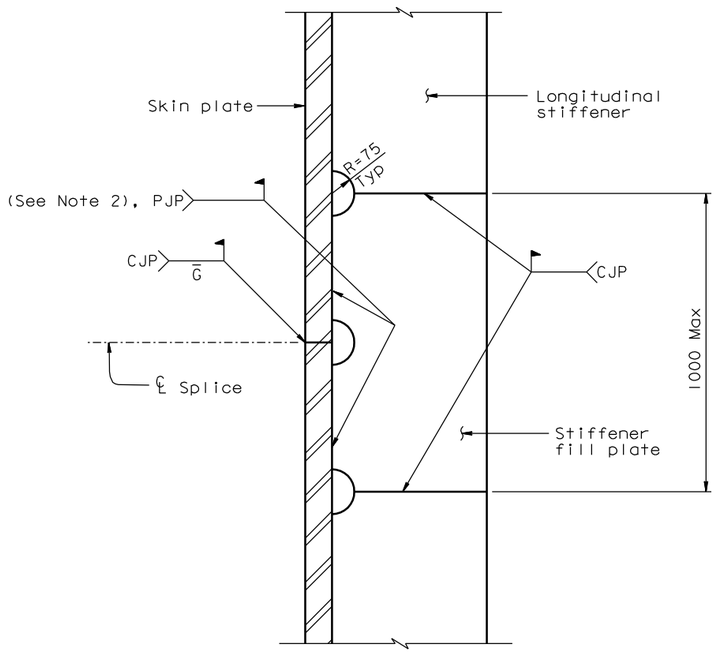

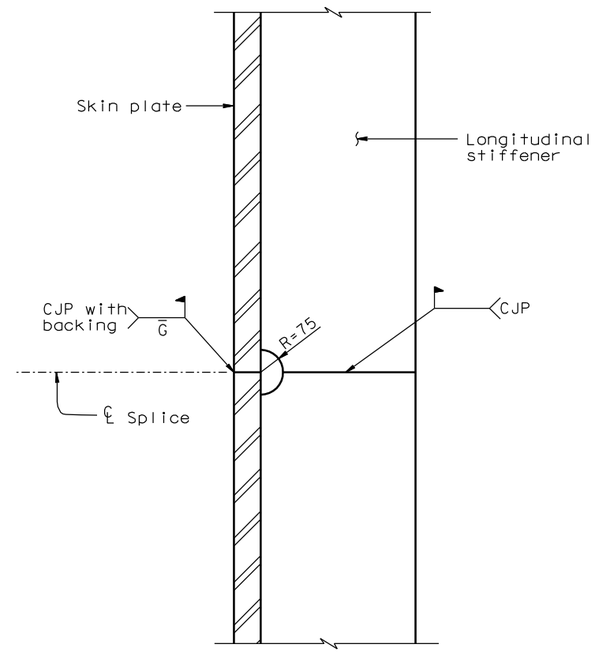

SUPPLEMENTAL SHEET

CONTRACT CHANGE ORDER NO. _____
SHEET ___ OF ___

OPTION A - WELD SKIN PLATE FROM BOTH SIDES

(For all splice elevations)

OPTION B - WELD SKIN PLATE FROM OUTSIDE ONLY

(For all splice elevations)

NOTES:

1. Details on this sheet are for illustration only. For skin plate thickness and stiffener width, see "Tower Shaft Details" sheets.
2. PJP weld shall be per Table 1 of "Tower Splice Details No. 2" sheet.

ALL-WELDED DETAILS FOR TOWER SPLICE

NTS

ALL DIMENSIONS ARE IN MILLIMETERS UNLESS OTHERWISE SHOWN

R. Valizadeh/V. Toan/Y.L./W.L./F.C.
DESIGN OVERSIGHT
Roya Valizadeh / Vong D. Toan / Y. Liu
SIGN OFF DATE 06/23/06

	BY	CHECKED
DESIGN	M. Nader	N. Vo
DETAILS	N. Vo	G. Baker
QUANTITIES	N. Vo	G. Baker

PREPARED FOR THE STATE OF CALIFORNIA DEPARTMENT OF TRANSPORTATION

R. Manzanarez
PROJECT ENGINEER

BRIDGE NO. 34-0006L/R
KILOMETER POST 13.2/13.9

SAN FRANCISCO OAKLAND BAY BRIDGE
EAST SPAN SEISMIC SAFETY PROJECT
SELF-ANCHORED SUSPENSION BRIDGE
(SUPERSTRUCTURE & TOWER)

TOWER SPLICE DETAILS NO. 23

Rev. Date: 5-18-98

ORIGINAL SCALE IN MILLIMETERS FOR REDUCED PLANS 0 10 20 30 40 50 60 70 80 90 100

CU 04
EA 0120F1

DISREGARD PRINTS BEARING EARLIER REVISION DATES 06/23/06

REVISION DATES (PRELIMINARY STAGE ONLY)

SHEET 144S1 OF

FILE => I:\bb\04-0120F1\sas\contract plans and cco\cco\cco*21\aetsp28s.dgn

USERNAME => ptom DATE PLOTTED => 23 APR 2007 TIME PLOTTED => 16:34:56