DIST.	COUNTY	ROUTE	KILOMETER POST TOTAL PROJECT	SHEET NO.	TOTAL SHEETS
04	SF	80	13.2/13.9	552R1	1204

Caltrans Metric

REGISTERED ENGINEER - CIVIL

12-6-04
PLANS APPROVAL DATE

REGISTERED PROFESSIONAL ENGINEER Marwan N. Nader No. C 054426 Exp. 12/31/07 CIVIL STATE OF CALIFORNIA

The State of California or its officers or agents shall not be responsible for the accuracy or completeness of electronic copies of this plan sheet.

T.Y. LIN / MOFFATT & NICHOL
825 BATTERY STREET
SAN FRANCISCO, CA 94111

Caltrans now has a web site! To get to the web site, go to: http://www.dot.ca.gov

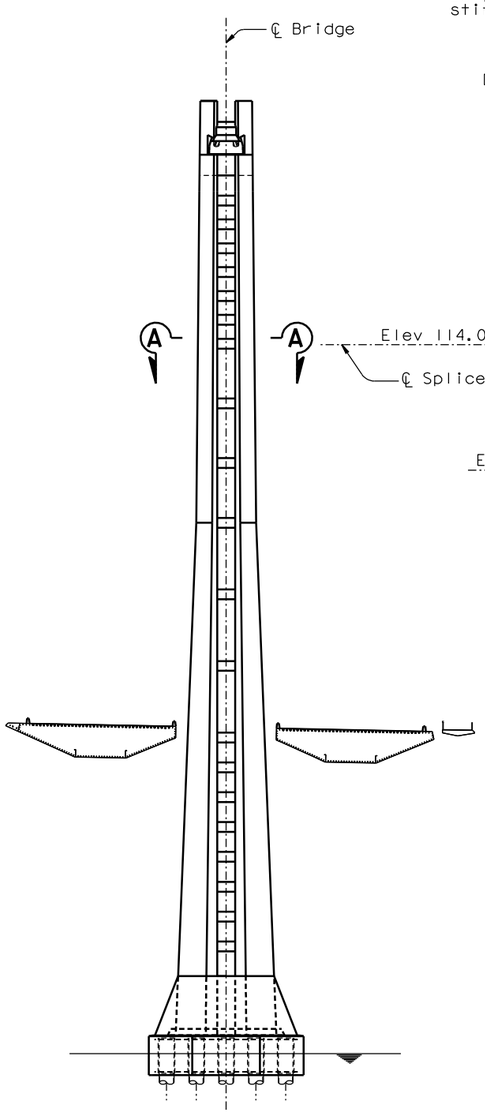

TOWER SPLICE LOCATION
1:500

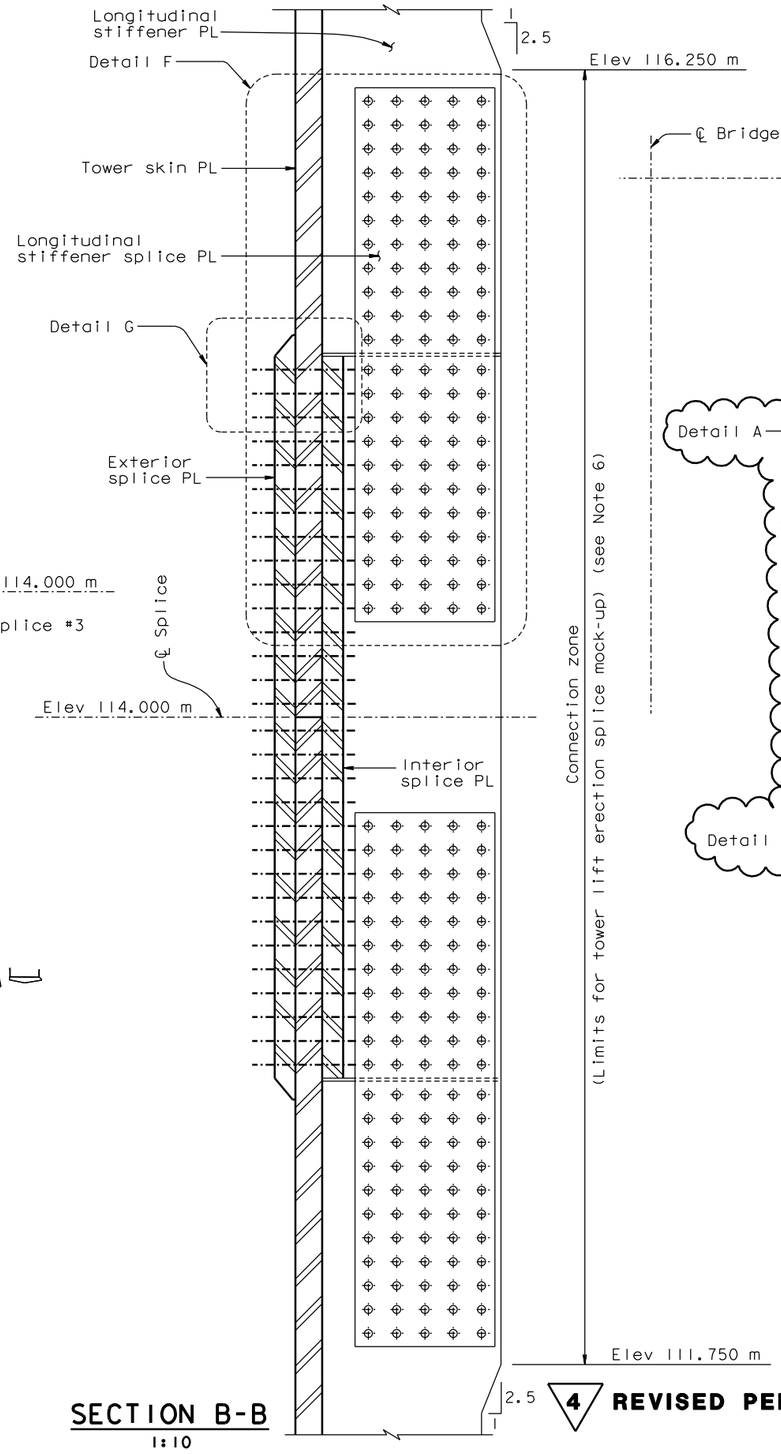

SECTION B-B
1:10

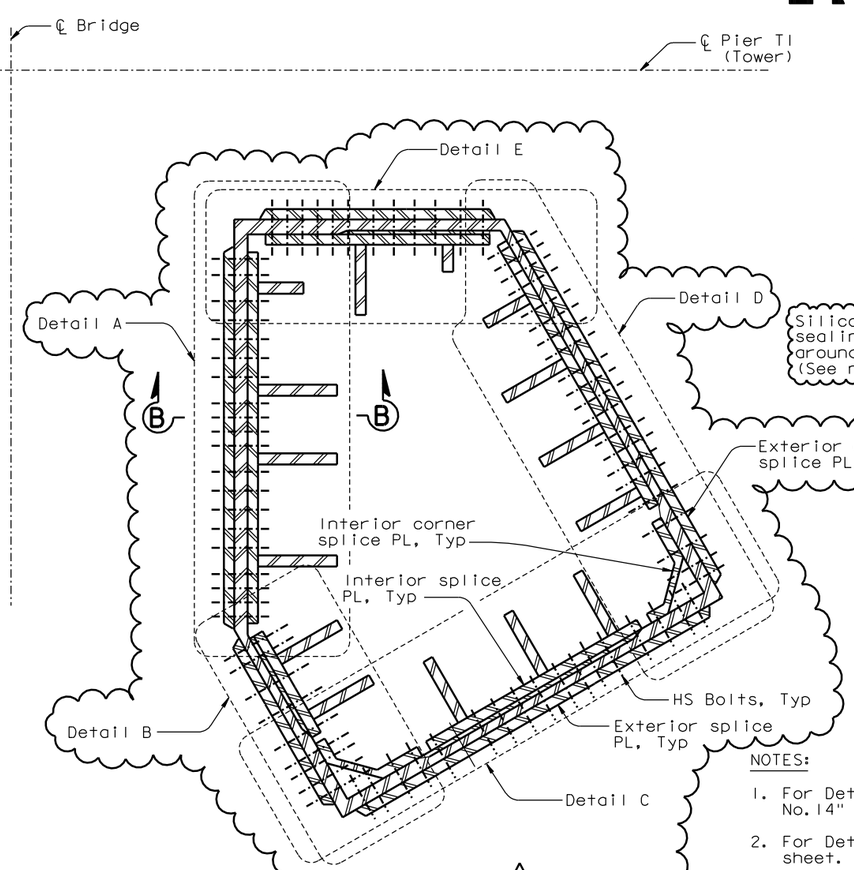

4 **SECTION A-A** 1
1:20

TYPICAL TOWER SHAFT SPLICE #3
(Limits for mock-up)
(see Note 6)

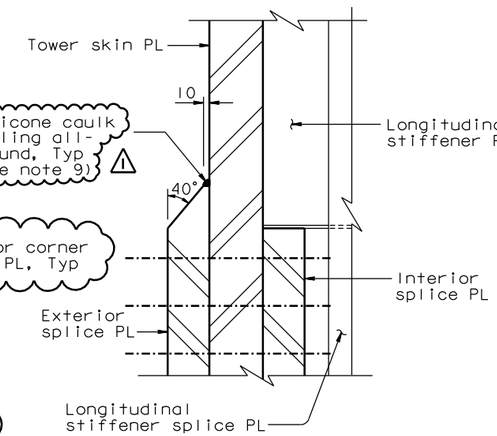

DETAIL G
1:5

NOTES:

1. For Details A and B, see "Tower Splice Details No. 14" sheet.
2. For Detail C, see "Tower Splice Details No. 15" sheet.
3. For Details D and E, see "Tower Splice Details No. 16" sheet.
4. For Detail F, see "Tower Splice Details No. 17" sheet.
5. The tower splice connections are designed as slip critical connections with class B contact surface (slip coefficient 0.5). The Contractor shall ensure that the flatness requirements are met at the faying surfaces.
6. Mock-up for tower lift erection splice shall be made for one shaft only. Limits shown apply to either all bolted, combined bolted and welded, or all welded splice.
7. Stiffeners A1, E7, and D4 shall not be tapered.
8. For stiffeners A1, E7, and D4 see "Tower Splice Details No. 17" sheet. (4, 1)
9. Silicone caulk sealing shall be applied around the perimeter (horizontal and vertical edges) of all exterior splice plates. (1)

1	06/23/06	SPLICE PLATES PER ISM	MN	NV	21
MARK	DATE	DESCRIPTIONS	BY	CH'D	CCO#
		REVISIONS			

CONTRACT CHANGE ORDER NO. ____
SHEET ___ OF ___

LEGEND:

M27 A490-X HS Bolt

4 **REVISED PER ADDENDUM NO. 4 DATED DECEMBER 9, 2005**

ALL DIMENSIONS ARE IN MILLIMETERS UNLESS OTHERWISE SHOWN

100 % PS&E

DATE PLOTTED => 23 APR 2007 TIME PLOTTED => 16:24:31

R. Valizadeh/V. Toan/Y.L./W.L./F.C.
DESIGN OVERSIGHT
Roya Valizadeh / Vong Toan / Y. Liu
SIGN OFF DATE 06/23/06

Rev. Date: 5-18-98

DESIGN	BY M. Nader	CHECKED N. Vo	
DETAILS	BY J. Lopez	CHECKED N. Vo	
QUANTITIES	BY J. Lopez	CHECKED N. Vo	

ORIGINAL SCALE IN MILLIMETERS FOR REDUCED PLANS 0 10 20 30 40 50 60 70 80 90 100

PREPARED FOR THE STATE OF CALIFORNIA DEPARTMENT OF TRANSPORTATION

R. Manzanarez
PROJECT ENGINEER

CU 04
EA 0120F1

BRIDGE NO. 34-0006L/R
KILOMETER POST 13.2/13.9

DISREGARD PRINTS BEARING EARLIER REVISION DATES

REVISION DATES (PRELIMINARY STAGE ONLY) 05/31/01 04/08/02 07/09/02 12/19/02 11/13/05

SHEET 135R1 OF

SAN FRANCISCO OAKLAND BAY BRIDGE
EAST SPAN SEISMIC SAFETY PROJECT
SELF-ANCHORED SUSPENSION BRIDGE (SUPERSTRUCTURE & TOWER)

TOWER SPLICE DETAILS NO. 13

USERNAME => ptom

FILE => I:\bb\04-0120F1\sas\contract plans and cco\cco\cco#21\detspl3.dgn