DIST.	COUNTY	ROUTE	KILOMETER POST TOTAL PROJECT	SHEET No.	TOTAL SHEETS
04	SF	80	13.2/13.9	541R1	1204

REGISTERED ENGINEER - CIVIL

12-6-04
PLANS APPROVAL DATE

REGISTERED PROFESSIONAL ENGINEER Marwan N. Nader No. C 054426 Exp. 12/31/07 CIVIL STATE OF CALIFORNIA

The State of California or its officers or agents shall not be responsible for the accuracy or completeness of electronic copies of this plan sheet.

T.Y. LIN / MOFFATT & NICHOL
825 BATTERY STREET
SAN FRANCISCO, CA 94111

Caltrans now has a web site! To get to the web site, go to: http://www.dot.ca.gov

4

Caltrans Metric

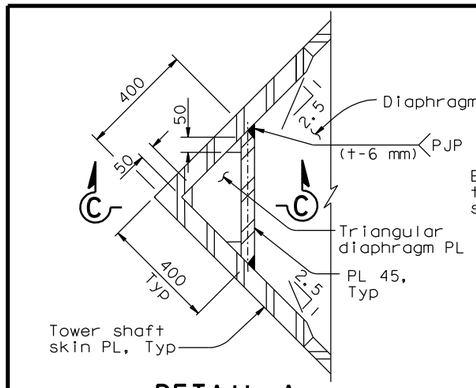

DETAIL A (See Note 2)
1:10

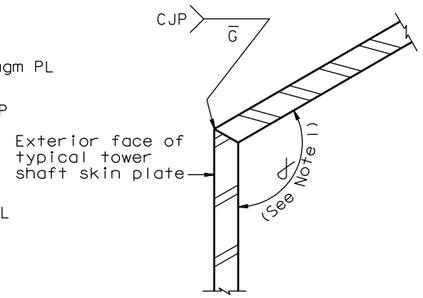

SECTION A-A
NTS
(Skin plate edge connection)
(See Note 8)

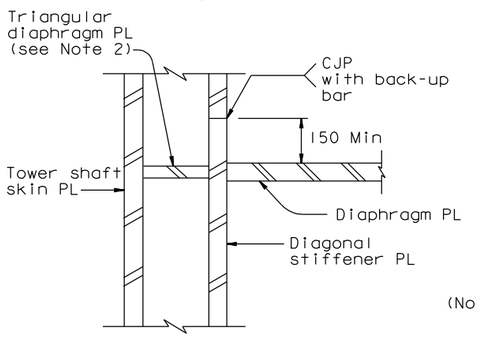

SECTION C-C
1:10

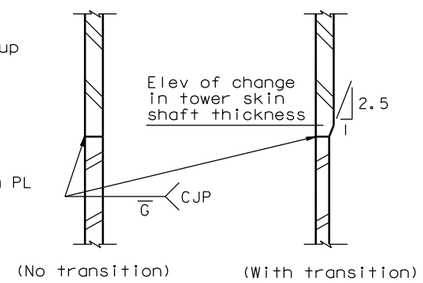

SECTION B-B
NTS
(Typical steel sheet and tower shaft segment connection UNO)

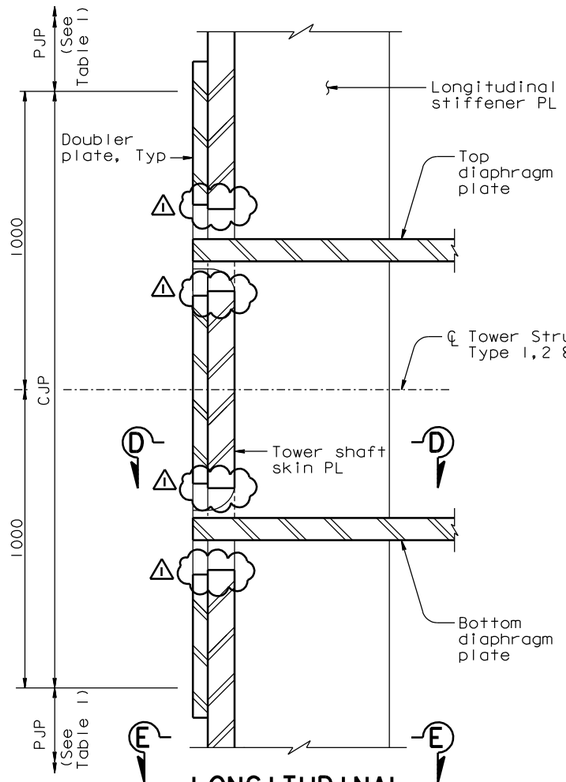

LONGITUDINAL STIFFENER CONNECTION
1:10

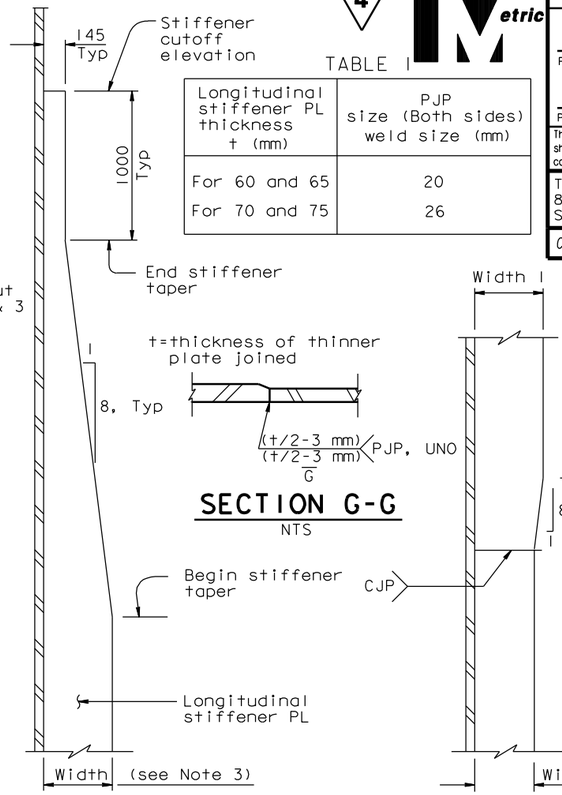

TABLE 1

Longitudinal stiffener PL thickness t (mm)	PJP size (Both sides) weld size (mm)
For 60 and 65	20
For 70 and 75	26

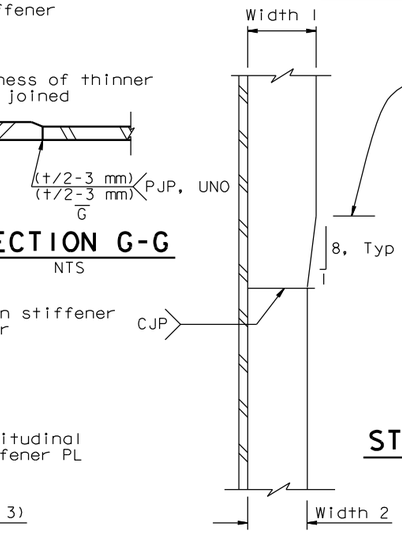

SECTION G-G
NTS

STIFFENER CUT-OFF
1:20
(See Notes 6, 7)

STIFFENER TRANSITION (WIDTH)
1:20

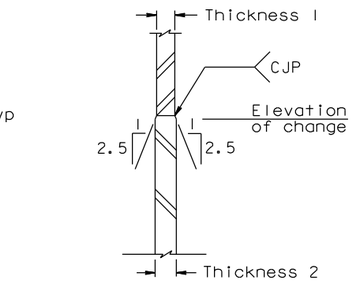

STIFFENER TRANSITION (THICKNESS)
1:10

LONGITUDINAL STIFFENER TAPER

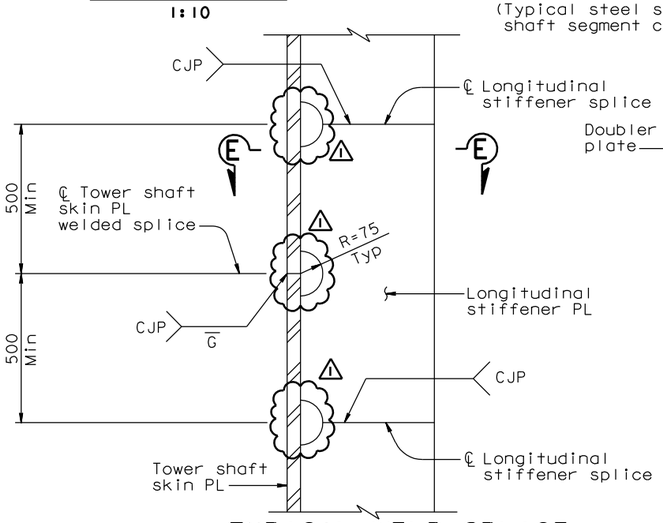

TYPICAL WELD SPLICE
1:10
(Between tower shaft segments)

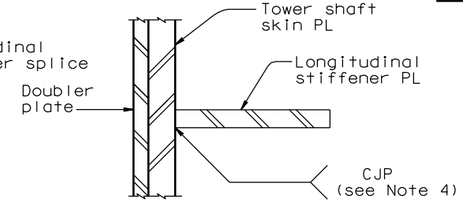

SECTION D-D
NTS

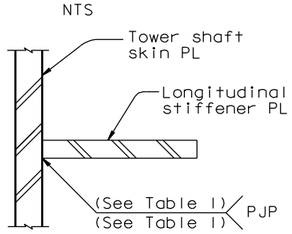

SECTION E-E
NTS

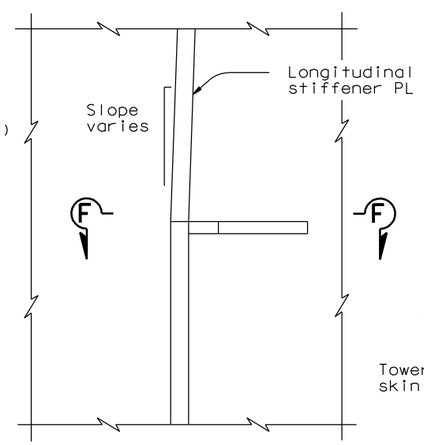

LONGITUDINAL STIFFENER KINK (See Note 5)
1:10

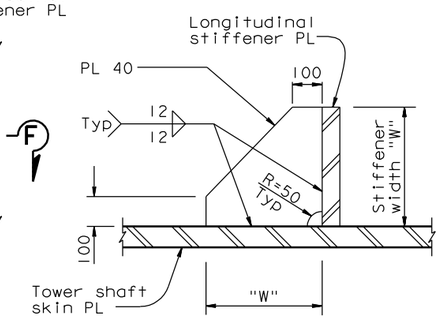

SECTION F-F

NOTES:

1. Angle ∝ Varies from 90° to 150°.
2. Triangular diaphragm plate shall be located at all diaphragm locations. For diaphragm locations, see "Tower Diaphragm Details No.1" sheet.
3. For longitudinal stiffener size, see "Tower Shaft Details" sheets.
4. CJP weld shall be performed between the longitudinal stiffener plate and tower skin plate A and E only. Longitudinal stiffener (A1) shall be a CJP with back-up bar. For weld between longitudinal stiffeners and tower shaft skin plate B, C, D, see Table 1.
5. For longitudinal stiffener kink at elevation 89.000 m, see" Tower Diaphragm Details No. (12) sheet. 1
6. For cut-off of longitudinal stiffener (B4) and (E4), see "Tower Splice Details No.7" sheet.
7. For cut-off of longitudinal stiffener (E2) see "Tower Splice Details No.12" sheet.
8. This detail is also applicable for the tower shaft splice plates at the corners.

4 REVISED PER ADDENDUM NO. 4 DATED DECEMBER 9, 2005

ALL DIMENSIONS ARE IN MILLIMETERS UNLESS OTHERWISE SHOWN

R. Valizadeh/V. Toan/Y.L./W.L./F.C.
DESIGN OVERSIGHT
SIGN OFF DATE 06/23/06

MARK	DATE	DESCRIPTIONS	BY	CH'D	CCO#
1	06/23/06	RATHOLE DIAMETER & MISC.	MN	NV	21

REVISIONS

CONTRACT CHANGE ORDER NO. ____
SHEET ____ OF ____

	BY	CHECKED
DESIGN	M. Nader	M. Gulyas
DETAILS	L. Rus	M. Gulyas
QUANTITIES	L. Rus	Y. Zhang

PREPARED FOR THE STATE OF CALIFORNIA DEPARTMENT OF TRANSPORTATION

R. Manzanarez
PROJECT ENGINEER

BRIDGE NO. 34-0006L/R
KILOMETER POST 13.2/13.9

SAN FRANCISCO OAKLAND BAY BRIDGE
EAST SPAN SEISMIC SAFETY PROJECT
SELF-ANCHORED SUSPENSION BRIDGE
(SUPERSTRUCTURE & TOWER)

TOWER SPLICE DETAILS NO.2

Rev. Date: 5-18-98

ORIGINAL SCALE IN MILLIMETERS FOR REDUCED PLANS 0 10 20 30 40 50 60 70 80 90 100

CU 04
EA 0120F1

DISREGARD PRINTS BEARING EARLIER REVISION DATES

REVISION DATES (PRELIMINARY STAGE ONLY): 06/05/00 08/07/00 05/31/01 04/08/02 07/01/02 12/19/02 11/13/05

SHEET 124R1 OF

FILE => I:\bb\04-012001\sas\contract plans and cco\cco\cco#21\aetsp02.dgn

100% PS&E

DATE PLOTTED => 23 APR 2007 TIME PLOTTED => 16:09:31

USERNAME => ptom