DIST.	COUNTY	ROUTE	KILOMETER POST TOTAL PROJECT	SHEET NO.	TOTAL SHEETS
04	SF	80	13.2/13.9	538R1	1204

REGISTERED ENGINEER - CIVIL

12-6-04
PLANS APPROVAL DATE

REGISTERED PROFESSIONAL ENGINEER Marwan N. Nader No. C 054426 Exp. 12/31/07 CIVIL STATE OF CALIFORNIA

The State of California or its officers or agents shall not be responsible for the accuracy or completeness of electronic copies of this plan sheet.

T.Y. LIN / MOFFATT & NICHOL
825 BATTERY STREET
SAN FRANCISCO, CA 94111

Caltrans now has a web site! To get to the web site, go to: http://www.dot.ca.gov

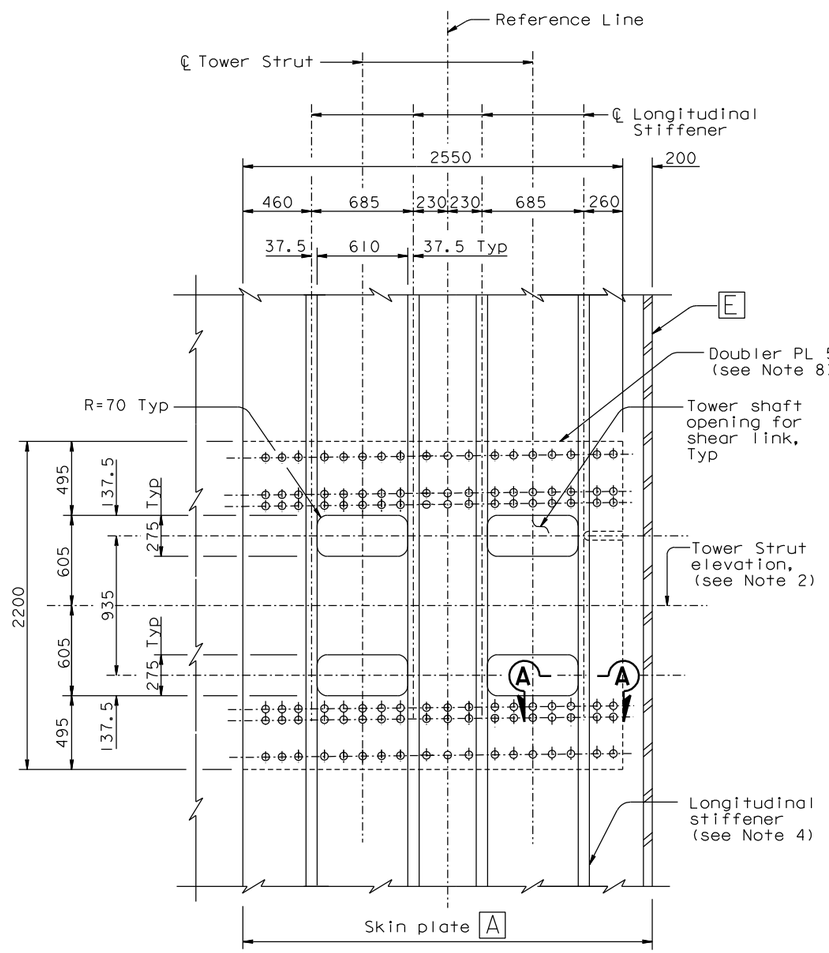

FOR STRUTS TYPE 1
1:20

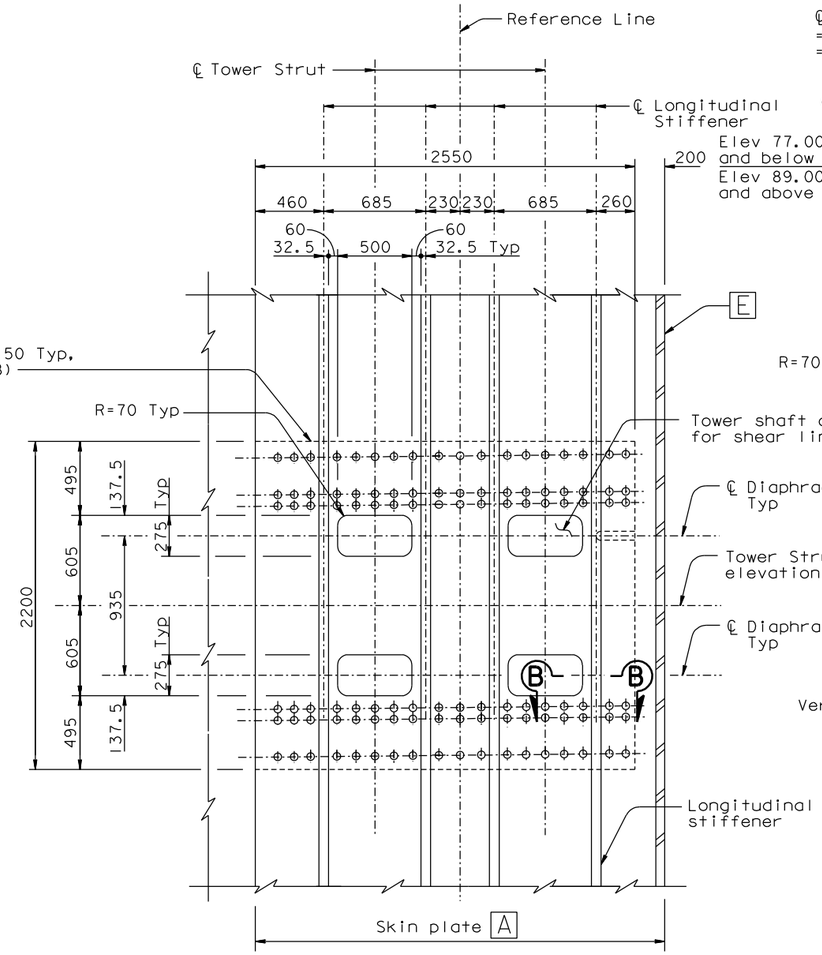

FOR STRUTS TYPE 2
1:20

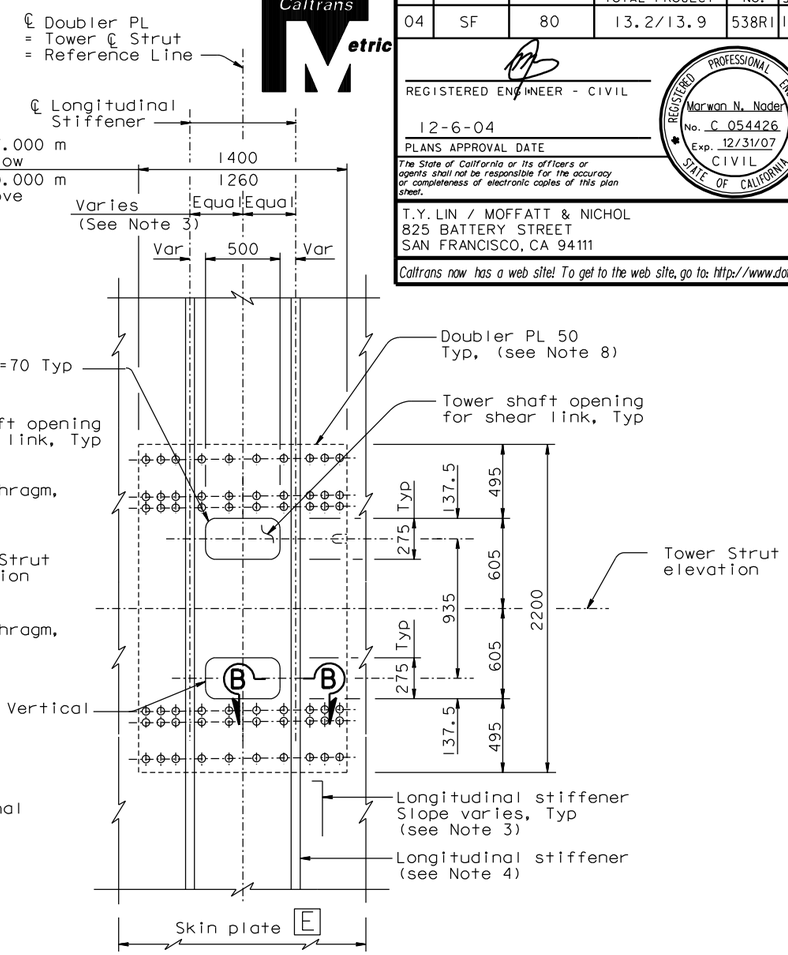

FOR STRUTS TYPE 3
1:20

TOWER SHAFT OPENING FOR SHEAR LINK (see Note 5 and 9)

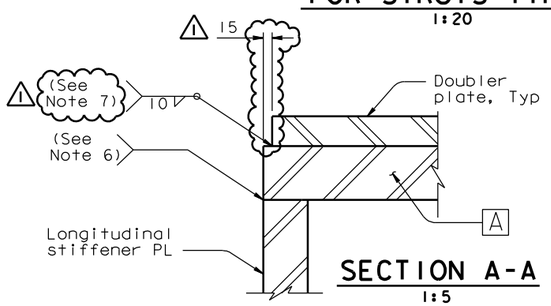

SECTION A-A
1:5

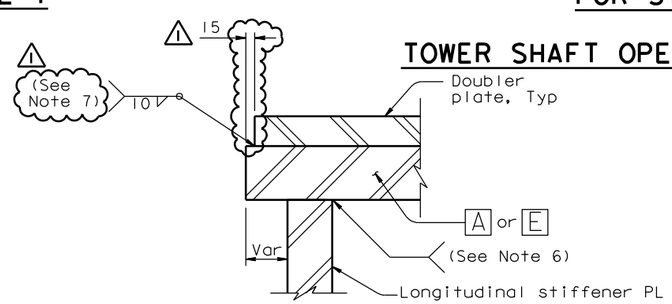

SECTION B-B
1:5

LEGEND:

A Skin Plate Designation

NOTES:

1. Horizontal stiffeners, diaphragm plates and other structure elements associated with tower strut are not shown for clarity.
2. For tower strut details, see "Tower Strut Details" sheets.
3. For longitudinal stiffener slopes details, see "Tower Shaft Details No.7" sheet.
4. For longitudinal stiffener spacing and size, see "Tower Shaft Details No.3" and "Tower Shaft Details No.7" sheets.
5. For bolt layout, see "Tower Shaft Details No.11" sheet.
6. For longitudinal stiffener to tower skin plate connection details, see "Tower Splice Details No.2" sheet.
7. 1 Weld all around doubler plate opening.
8. Doubler plate shall be A709M HPS 485W.
9. Bolts for tower strut connection, not shown for clarity. For tower strut connection details, see "Tower Strut Details" sheets.
10. For Reference Line definition, see "Tower Strut Facade Details" sheets.

MARK	DATE	DESCRIPTIONS	BY	CH'D	CCO#
1	06/23/06	DOUBLER PLATE SEAL WELD	MN	NV	21

REVISIONS

CONTRACT CHANGE ORDER NO. _____
SHEET ___ OF ___

ALL DIMENSIONS ARE IN MILLIMETERS UNLESS OTHERWISE SHOWN

R. Valizadeh/V. Toan/Y.L./W.L./F.C.
DESIGN OVERSIGHT
SIGN OFF DATE 06/23/06

Rev. Date: 5-18-98

	BY	CHECKED
DESIGN	M. Nader	M. Gulyas
DETAILS	L. Rus	M. Gulyas
QUANTITIES	L. Rus	Y. Zhang

PREPARED FOR THE STATE OF CALIFORNIA DEPARTMENT OF TRANSPORTATION

R. Manzanarez
PROJECT ENGINEER

BRIDGE NO. 34-0006L/R
KILOMETER POST 13.2/13.9

SAN FRANCISCO OAKLAND BAY BRIDGE
EAST SPAN SEISMIC SAFETY PROJECT
SELF-ANCHORED SUSPENSION BRIDGE (SUPERSTRUCTURE & TOWER)

TOWER SHAFT DETAILS NO. 10

ORIGINAL SCALE IN MILLIMETERS FOR REDUCED PLANS 0 10 20 30 40 50 60 70 80 90 100

CU 04
EA 0120F1

DISREGARD PRINTS BEARING EARLIER REVISION DATES

REVISION DATES (PRELIMINARY STAGE ONLY): 08/02/99 05/31/01 04/08/02 04/26/02 07/01/02 12/19/02

SHEET 121R1 OF

FILE => I:\bb\04-012001\sas\contract plans and cco\cco\cco#21\aetidll.dgn

100% PS&E

DATE PLOTTED => 23 APR 2007 TIME PLOTTED => 16:03:13

USERNAME => ptom