DIST.	COUNTY	ROUTE	KILOMETER POST TOTAL PROJECT	SHEET NO.	TOTAL SHEETS
04	SF	80	13.2/13.9	538R1	1204

REGISTERED ENGINEER - CIVIL

12-6-04

PLANS APPROVAL DATE

REGISTERED PROFESSIONAL ENGINEER Marwan N. Nader No. C 054426 Exp. 12/31/07 CIVIL STATE OF CALIFORNIA

The State of California or its officers or agents shall not be responsible for the accuracy or completeness of electronic copies of this plan sheet.

T.Y. LIN / MOFFATT & NICHOL
825 BATTERY STREET
SAN FRANCISCO, CA 94111

Caltrans now has a web site! To get to the web site, go to: http://www.dot.ca.gov

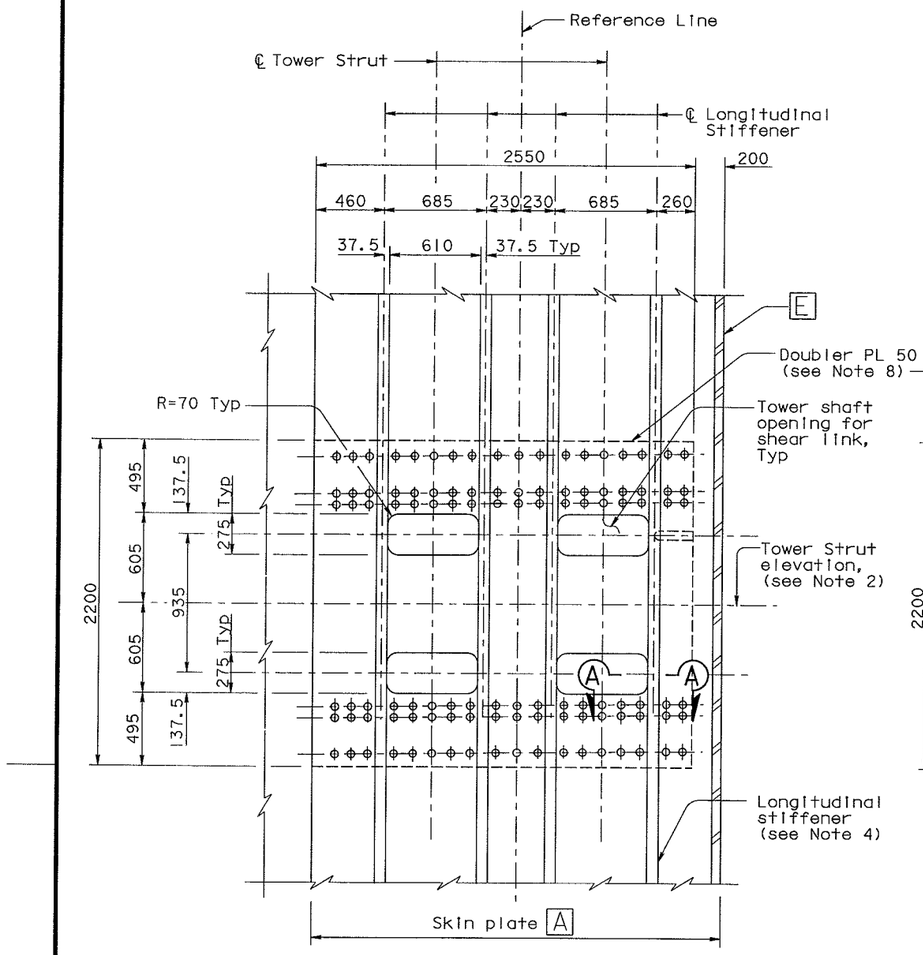

FOR STRUTS TYPE 1
1:20

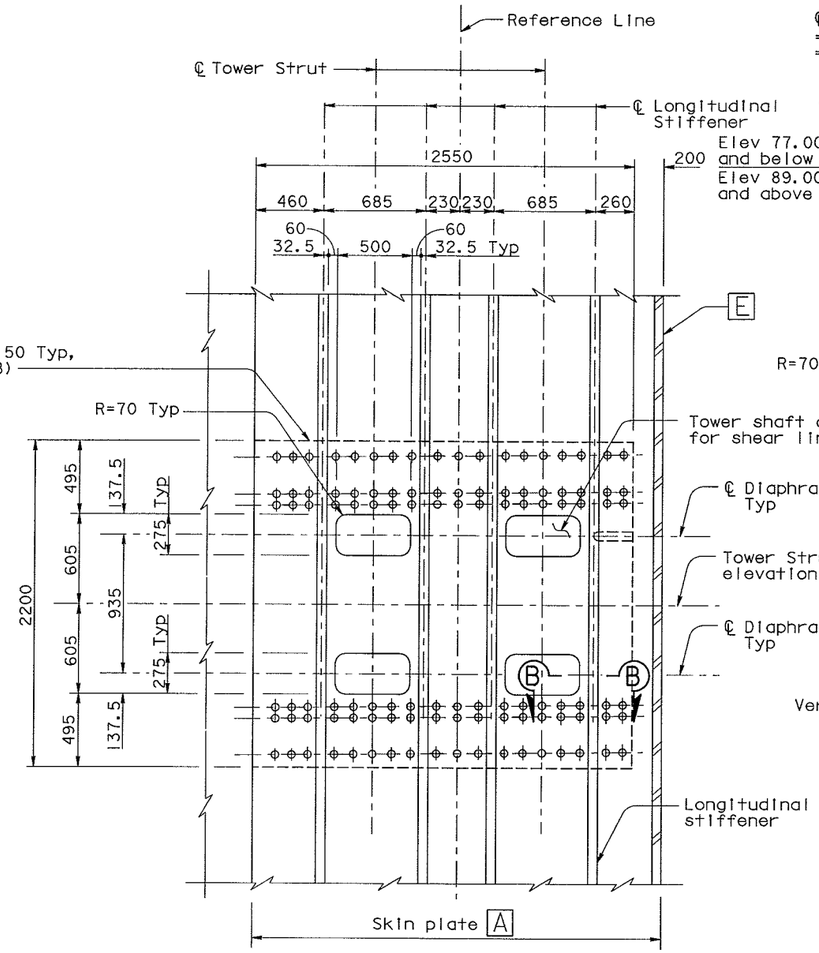

FOR STRUTS TYPE 2
1:20

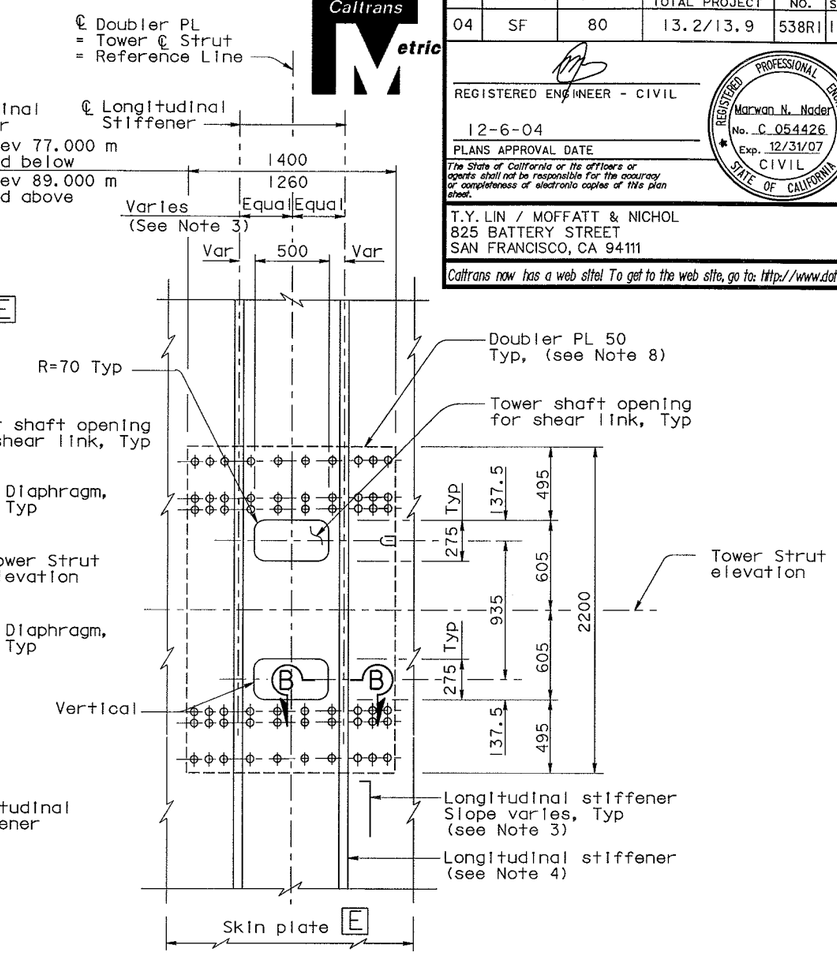

FOR STRUTS TYPE 3
1:20

TOWER SHAFT OPENING FOR SHEAR LINK (see Note 5 and 9)

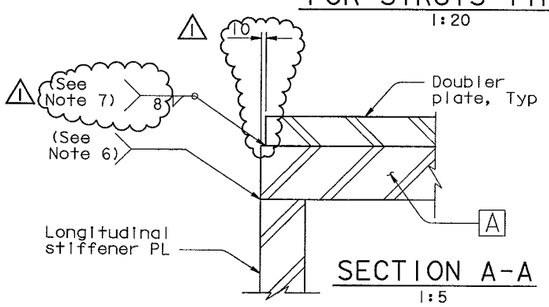

SECTION A-A
1:5

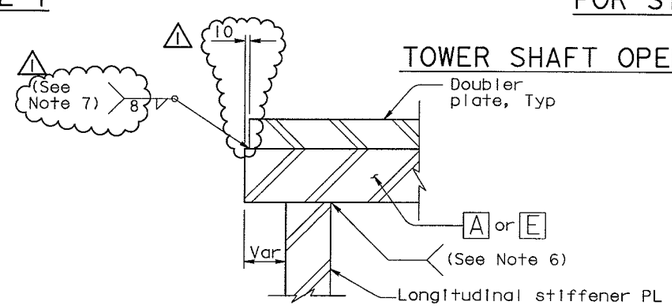

SECTION B-B
1:5

LEGEND:

A Skin Plate Designation

NOTES:

1. Horizontal stiffeners, diaphragm plates and other structure elements associated with tower strut are not shown for clarity.
2. For tower strut details, see "Tower Strut Details" sheets.
3. For longitudinal stiffener slopes details, see "Tower Shaft Details No.7" sheet.
4. For longitudinal stiffener spacing and size, see "Tower Shaft Details No.3" and "Tower Shaft Details No.7" sheets.
5. For bolt layout, see "Tower Shaft Details No.11" sheet.
6. For longitudinal stiffener to tower skin plate connection details, see "Tower Splice Details No.2" sheet.
7. Weld all around doubler plate opening.
8. Doubler plate shall be A709M HPS 485W.
9. Bolts for tower strut connection, not shown for clarity. For tower strut connection details, see "Tower Strut Details" sheets.
10. For Reference Line definition, see "Tower Strut Facade Details" sheets.

MARK	DATE	DESCRIPTIONS	BY	CH'D
1	01/29/07	DOUBLER PLATE SEAL WELD	MN	NV

REVISIONS

CONTRACT CHANGE ORDER NO. _____
SHEET ____ OF ____

ALL DIMENSIONS ARE IN MILLIMETERS UNLESS OTHERWISE SHOWN

R. Valizadeh/V. Toan/Y.L./W.L./F.C.
DESIGN OVERSIGHT
SIGN OFF DATE 06/23/06

Rev. Date: 5-18-98

	BY	CHECKED
DESIGN	M. Nader	M. Gulyas
DETAILS	L. Rus	M. Gulyas
QUANTITIES	L. Rus	Y. Zhang

PREPARED FOR THE STATE OF CALIFORNIA DEPARTMENT OF TRANSPORTATION

R. Manzanarez
PROJECT ENGINEER

BRIDGE NO. 34-0006L/R
KILOMETER POST 13.2/13.9

SAN FRANCISCO OAKLAND BAY BRIDGE
EAST SPAN SEISMIC SAFETY PROJECT
SELF-ANCHORED SUSPENSION BRIDGE
(SUPERSTRUCTURE & TOWER)

TOWER SHAFT DETAILS NO. 10

ORIGINAL SCALE IN MILLIMETERS FOR REDUCED PLANS 0 10 20 30 40 50 60 70 80 90 100

CU 04
EA 0120F1

DISREGARD PRINTS BEARING EARLIER REVISION DATES

REVISION DATES (PRELIMINARY STAGE ONLY) 08/02/99 05/31/01 01/08/02 04/26/02 07/09/02 12/19/02

SHEET 121R1 OF

FILE => p:\bb\04-012001\sas\contract plans and cco\cco\cco#21\supplem to cco#21\aetldt1.dgn

100% PS&E

USERNAME => vignatovs DATE PLOTTED => 29 JAN 2007 TIME PLOTTED => 13:11:43

DIST.	COUNTY	ROUTE	KILOMETER POST TOTAL PROJECT	SHEET NO.	TOTAL SHEETS
04	SF	80	13.2/13.9	539R1	1204

Caltrans Metric

REGISTERED ENGINEER - CIVIL

12-6-04

PLANS APPROVAL DATE

The State of California or its officers or agents shall not be responsible for the accuracy or completeness of electronic copies of this plan sheet.

REGISTERED PROFESSIONAL ENGINEER Marwan N. Nader No. C 054426 Exp. 12/31/07 CIVIL STATE OF CALIFORNIA

T.Y. LIN / MOFFATT & NICHOL
825 BATTERY STREET
SAN FRANCISCO, CA 94111

Caltrans now has a web site! To get to the web site, go to: http://www.dot.ca.gov

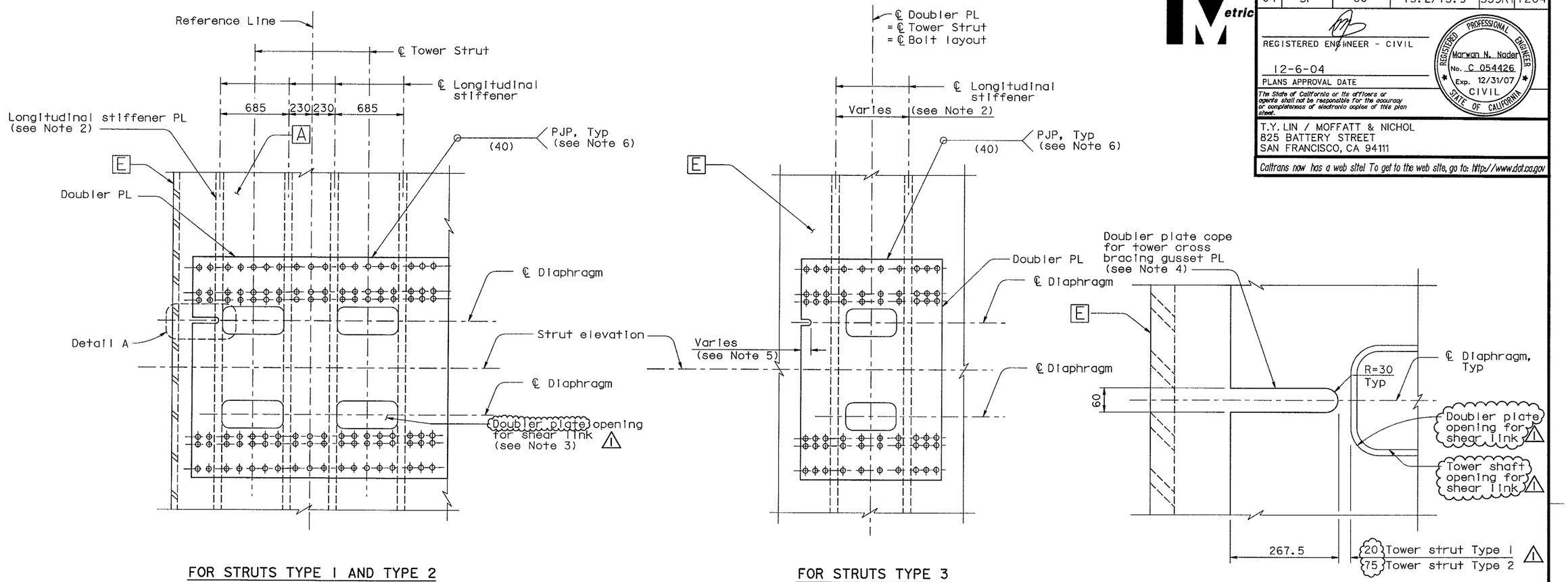

FOR STRUTS TYPE 1 AND TYPE 2
(Tower shaft opening for strut type 1 shown, strut type 2 similar)

FOR STRUTS TYPE 3

DETAIL A
1:5

BOLT LAYOUT (See Note 7 and 8)
1:20

LEGEND:

⌖ M24 A325-X HS Bolts

NOTES:

1. For doubler plate details, see "Tower Shaft Details No. 10" sheet.
2. For longitudinal stiffener spacing and size, see "Tower Shaft Details No. 3" and "Tower Shaft Details No. 7" sheets.
3. Seal weld all around doubler plate opening. For details, see "Tower Shaft Details No. 10" sheet.
4. Doubler plate cope is only located at tower cross bracing elevations. For tower cross bracing details, see "Tower Strut Details No. 9" sheet.
5. Cope doubler plate as necessary to accommodate cross bracing gusset plate.
6. Filler metal shall match steel base metal A709M HPS 485W.
7. Bolts for tower strut connection not shown for clarity. For tower strut connection details, see "Tower Strut Details" sheets.
8. For bolt layout, see "Tower Strut Facade Details" sheet.
9. For Reference Line definition, see "Tower Strut Facade Details" sheets.

MARK	DATE	DESCRIPTIONS	BY	CH'D
1	01/29/07	DOUBLER PLATE SEAL WELD	MN	NV

REVISIONS

CONTRACT CHANGE ORDER NO. _____
SHEET ____ OF ____

ALL DIMENSIONS ARE IN MILLIMETERS UNLESS OTHERWISE SHOWN

R. Valizadeh/V. Toan/Y.L./W.L./F.C.
DESIGN OVERSIGHT
Roger Valizadeh / Vong Toan / Y. Lin
SIGN OFF DATE 06/23/06

	BY	CHECKED
DESIGN	M. Nader	M. Gulyas
DETAILS	L. Rus	M. Gulyas
QUANTITIES	L. Rus	Y. Zhang

PREPARED FOR THE STATE OF CALIFORNIA DEPARTMENT OF TRANSPORTATION

R. Manzanarez
PROJECT ENGINEER

BRIDGE NO. 34-0006L/R
KILOMETER POST 13.2/13.9

SAN FRANCISCO OAKLAND BAY BRIDGE
EAST SPAN SEISMIC SAFETY PROJECT
SELF-ANCHORED SUSPENSION BRIDGE
(SUPERSTRUCTURE & TOWER)

TOWER SHAFT DETAILS NO. 11

Rev. Date: 5-18-98

ORIGINAL SCALE IN MILLIMETERS FOR REDUCED PLANS 0 10 20 30 40 50 60 70 80 90 100

CU 04
EA 0120F1

DISREGARD PRINTS BEARING EARLIER REVISION DATES

REVISION DATES (PRELIMINARY STAGE ONLY) 08/02/99 05/31/01 04/08/02 04/26/02 07/01/02 12/19/02

SHEET 122R1 OF

FILE => p:\bb\04-012001\sas\contract plans and cco\cco\cco#21\supplem to cco#21\aetld12a.dgn

100 % PS&E

USERNAME => vignatovsk DATE PLOTTED => 29 JAN 2007 TIME PLOTTED => 13:14:11