DIST.	COUNTY	ROUTE	KILOMETER POST TOTAL PROJECT	SHEET NO.	TOTAL SHEETS
04	SF	80	13.2/13.9	508R2	1204

Caltrans Metric

REGISTERED ENGINEER - CIVIL

12-6-04
PLANS APPROVAL DATE

REGISTERED PROFESSIONAL ENGINEER John Sun No. C 54648 Exp. 12/31/05 CIVIL STATE OF CALIFORNIA

The State of California or its officers or agents shall not be responsible for the accuracy or completeness of electronic copies of this plan sheet.

T.Y. LIN / MOFFATT & NICHOL
825 BATTERY STREET
SAN FRANCISCO, CA 94111

Caltrans now has a web site! To get to the web site, go to: http://www.dot.ca.gov

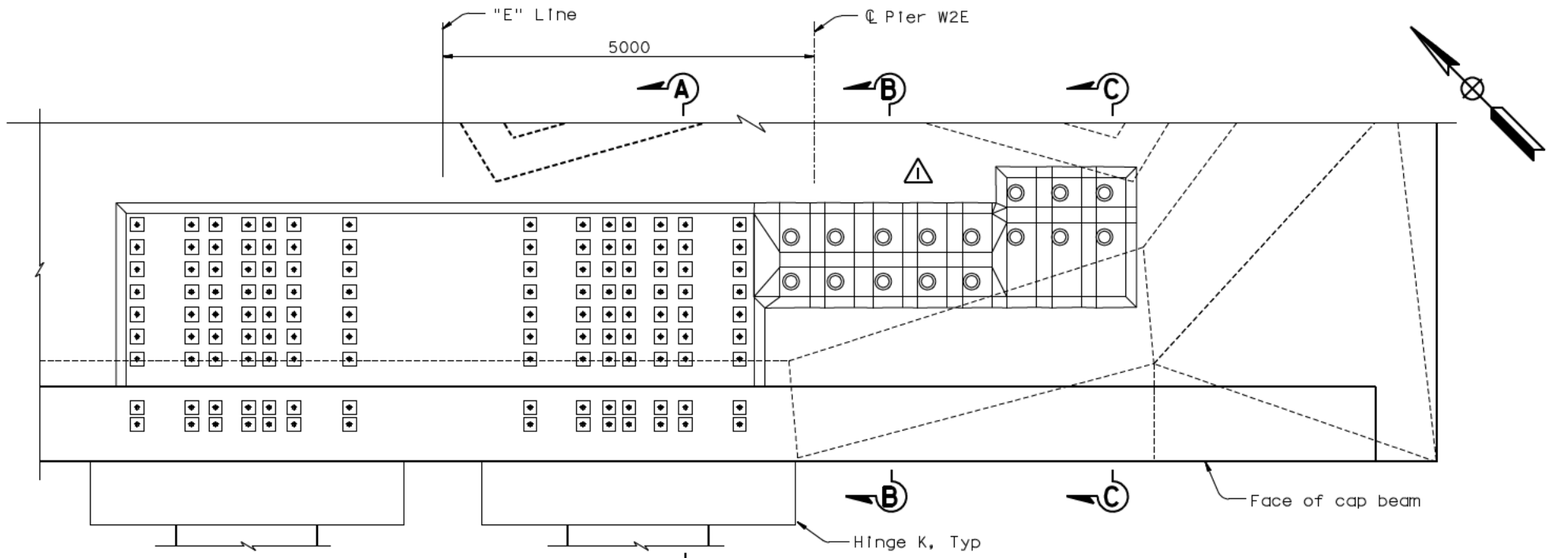

PLAN A
1:40
(36 Dia post-tension rod and 12-15 Dia strand tendon blockouts)

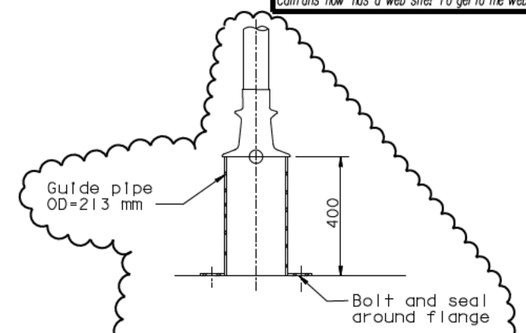

2 **DEAD END GUIDE PIPE**
NTS (see Note 6)

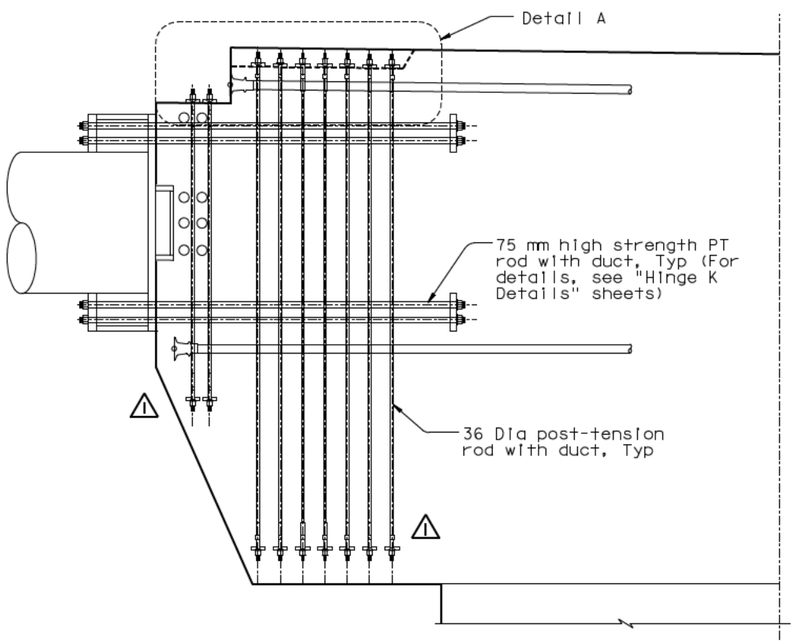

SECTION A-A
1:40

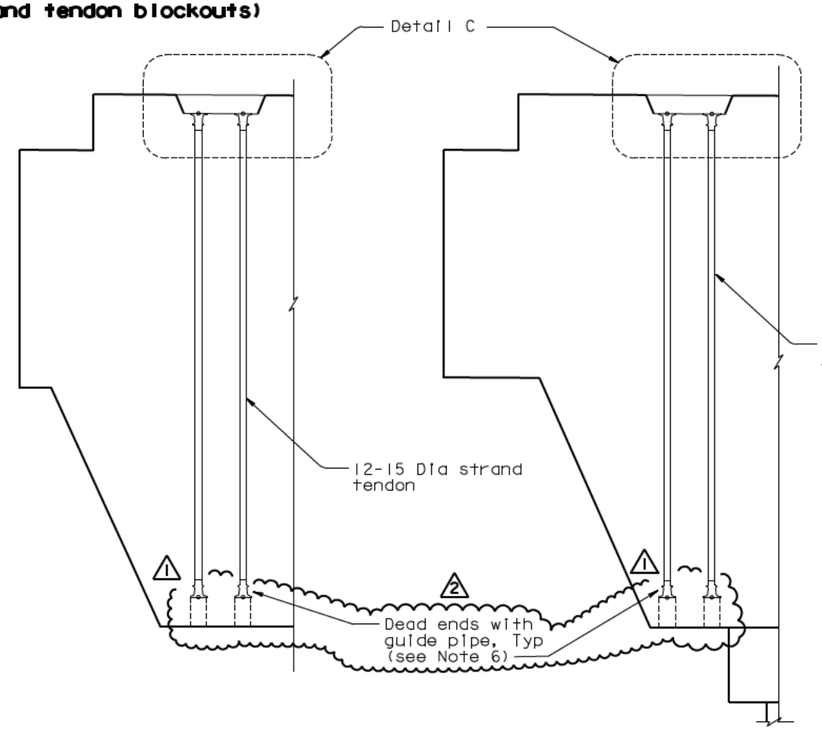

SECTION B-B
1:40

SECTION C-C
1:40

ALL DIMENSIONS ARE IN MILLIMETERS UNLESS OTHERWISE SHOWN

NOTES:

1. Cap beam reinforcement not shown for clarity.
2. Local confining spiral reinforcement for tendon anchors shall be provided by PT tendon hardware supplier.
3. Blockouts on the cap beam "E" Line shown, blockouts on the cap beam "W" Line similar.
4. 1 For Details A and C, see "W2 Cap Beam Blockout Details No. 12" sheet.
5. For additional prestressing details, see "Prestressing Notes" sheet.
6. 2 Contractor shall coordinate the dead end guide pipe details with the PT Supplier and shall submit them to the Engineer for review and approval. Contractor shall grout the guide pipe after stressing operations have been completed.

REGISTERED PROFESSIONAL ENGINEER James P. Duxbury No. C 64677 Exp. 06/30/07 CIVIL STATE OF CALIFORNIA

FOR REVISIONS ONLY

MARK	DATE	DESCRIPTIONS	BY	CH'D	CCO#
2	01/31/07	CORROSION PROTECTION	JD	AS	16
1	07/21/06	W2 CAP BEAM ISD	JD	NV	23

REVISIONS

CONTRACT CHANGE ORDER NO. _____
SHEET ___ OF ___

100 % PS&E

R. Valizadeh/V. Toan/Y.L./W.L./F.C.
DESIGN OVERSIGHT
SIGN OFF DATE 01/31/07

DESIGN	BY J. Sun	CHECKED M. Chen	
DETAILS	BY J. Duxbury	CHECKED M. Chen	
QUANTITIES	BY S. Shi	CHECKED D. Harrison	

PREPARED FOR THE STATE OF CALIFORNIA DEPARTMENT OF TRANSPORTATION

R. Manzanarez
PROJECT ENGINEER

BRIDGE NO. 34-0006L/R
KILOMETER POST 13.2/13.9

SAN FRANCISCO OAKLAND BAY BRIDGE
EAST SPAN SEISMIC SAFETY PROJECT
SELF-ANCHORED SUSPENSION BRIDGE
(SUPERSTRUCTURE & TOWER)

W2 CAP BEAM BLOCKOUT DETAILS NO. 11

Rev. Date: 5-18-98

ORIGINAL SCALE IN MILLIMETERS FOR REDUCED PLANS 0 10 20 30 40 50 60 70 80 90 100

CU 04
EA 0120F1

DISREGARD PRINTS BEARING EARLIER REVISION DATES

REVISION DATES (PRELIMINARY STAGE ONLY) 05/24/01 04/08/02 07/09/02 12/19/02

SHEET 91R2 OF

FILE -> I:\bb\04-012001\sas\contract plans and cco\cco\in progress\cco#16\aecbb11.dgn

USERNAME => visitor DATE PLOTTED => 15 MAR 2007 TIME PLOTTED => 15:35:58