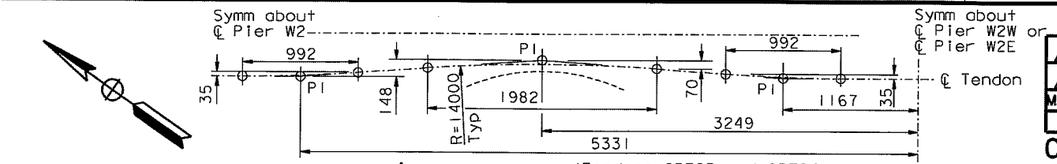

⚠1 DETAIL A'
1:25
(Tendons CBT23 and CBT24)
(Tendons CBT30 and CBT31)

MARK	DATE	DESCRIPTIONS	BY	CH'D	CCO#
REVISIONS					
⚠2	01/31/07	CORROSION PROTECTION	JD	AS	16
⚠1	01/21/06	W2 CAP BEAM ISD	JD	NV	23

CONTRACT CHANGE ORDER NO. 16
SHEET 2 OF 12

Caltrans now has a web site! To get to the web site, go to: http://www.dot.ca.gov

REGISTERED PROFESSIONAL ENGINEER — James P. Duxbury — No. C 64677 — Exp. 06/30/07 — CIVIL — STATE OF CALIFORNIA

Caltrans Metric

DIST.	COUNTY	ROUTE	KILOMETER POST TOTAL PROJECT	SHEET NO.	TOTAL SHEETS
04	SF	80	13.2/13.9	462R2	1204

REGISTERED ENGINEER - CIVIL

12-6-04
PLANS APPROVAL DATE

REGISTERED PROFESSIONAL ENGINEER — John Sun — No. C 54648 — Exp. 12/31/05 — CIVIL — STATE OF CALIFORNIA

The State of California or its officers or agents shall not be responsible for the accuracy or completeness of electronic copies of this plan sheet.

T.Y. LIN / MOFFATT & NICHOL
825 BATTERY STREET
SAN FRANCISCO, CA 94111

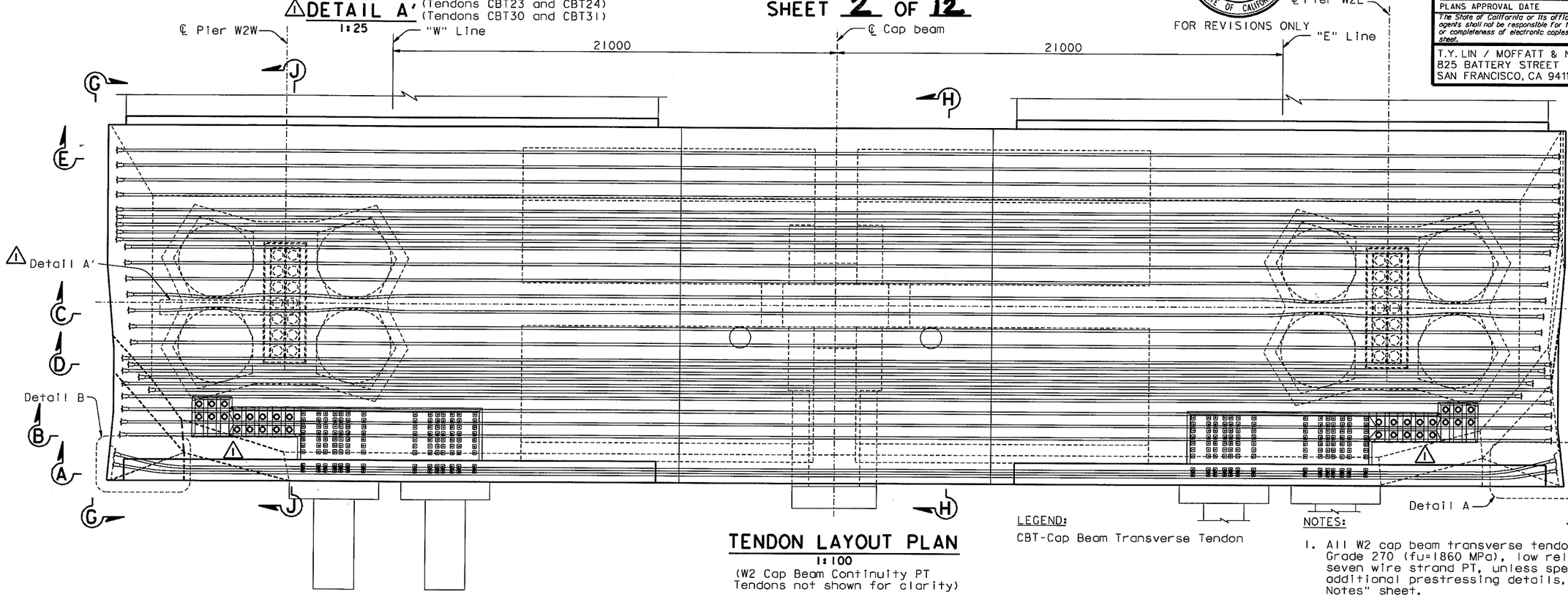

TENDON LAYOUT PLAN
1:100
(W2 Cap Beam Continuity PT
Tendons not shown for clarity)

LEGEND:
CBT-Cap Beam Transverse Tendon

NOTES:

1. All W2 cap beam transverse tendons are ASTM A416 Grade 270 (fu=1860 MPa), low relaxation, 27-15 Dia seven wire strand PT, unless specified otherwise. For additional prestressing details, see "Prestressing Notes" sheet.
2. For Section A-A, see "W2 Cap Beam Post-Tensioning Details No.2" sheet.
3. For Sections B-B through E-E, see "W2 Cap Beam Post-Tensioning Details No.3" sheet.
4. For Sections F-F through J-J, see "W2 Cap Beam Post-Tensioning Details No.4" sheet.
5. For bikepath details near cap beam, see "Bikepath Details" sheets.
6. For PT blockout dimensions, see "W2 Cap Beam Blockout Details" sheets.
7. Jacking force in the W2 cap beam transverse tendons (CBT1-CBT36) shall be 5265 kN typical.
8. For general stressing sequence, see "Pier W2 Construction Sequence" sheet.
9. For "W2 Cap Beam Post-Tensioning Details" sheets, the Contractor shall verify all controlling field dimensions before ordering or fabricating any material.
10. W2 cap beam elevations are to top of finished concrete and do not include overlay thickness.

ALL DIMENSIONS ARE IN MILLIMETERS UNLESS OTHERWISE SHOWN

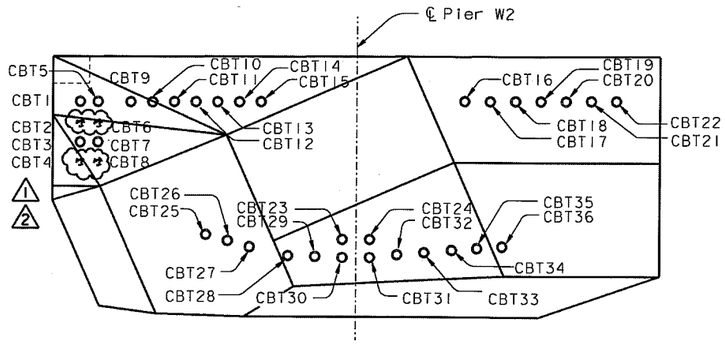

TENDON DESIGNATION
1:80

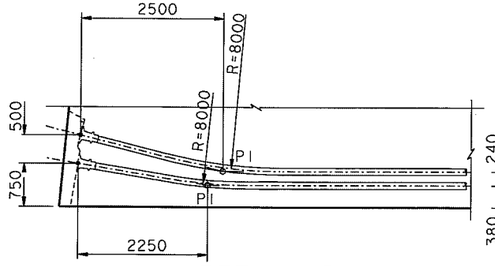

DETAIL B
1:50
(Tendons CBT1 and CBT5)
⚠1 (Tendons CBT2 thru CBT8 similar)

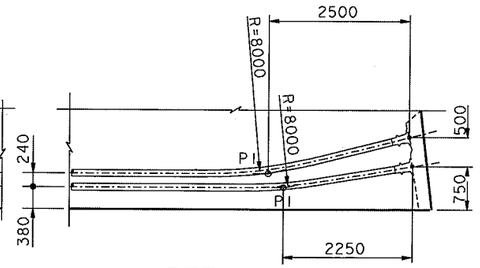

DETAIL A
1:50
(Tendons CBT1 and CBT5)
⚠1 (Tendons CBT2 thru CBT8 similar)

100% PS&E
DATE PLOTTED => 15 MAR 2007 TIME PLOTTED => 15:21:43
USERNAME => Xvisitor

R. Vaitzadeh/V. Toan/Y.L./W.L./F.C.
DESIGN OVERSIGHT
SIGN OFF DATE 01/31/07
Rev. Date: 5-18-98

	BY	CHECKED
DESIGN	J. Sun	M. Chen
DETAILS	J. Duxbury	M. Chen
QUANTITIES	S. Shi	D. Harrison

PREPARED FOR THE STATE OF CALIFORNIA
DEPARTMENT OF TRANSPORTATION

R. Manzanarez
PROJECT ENGINEER

BRIDGE NO. 34-0006L/R
KILOMETER POST 13.2/13.9

SAN FRANCISCO OAKLAND BAY BRIDGE
EAST SPAN SEISMIC SAFETY PROJECT
SELF-ANCHORED SUSPENSION BRIDGE
(SUPERSTRUCTURE & TOWER)

W2 CAP BEAM POST-TENSIONING DETAILS NO. 1

ORIGINAL SCALE IN MILLIMETERS FOR REDUCED PLANS 0 10 20 30 40 50 60 70 80 90 100

CU 04
EA 0120F1

DISREGARD PRINTS BEARING EARLIER REVISION DATES

REVISION DATES (PRELIMINARY STAGE ONLY)									SHEET	OF
08/28/00	05/31/01	04/08/02	07/30/02	12/19/02					045R2	

FILE => I:\bb\04-012001\sas\contract plans and cco\cco\in progress\cco=16\aecpt01.dgn

DIST.	COUNTY	ROUTE	KILOMETER POST TOTAL PROJECT	SHEET NO.	TOTAL SHEETS
04	SF	80	13.2/13.9	463R2	1204

REGISTERED ENGINEER - CIVIL

12-6-04
PLANS APPROVAL DATE

The State of California or its officers or agents shall not be responsible for the accuracy or completeness of electronic copies of this plan sheet.

REGISTERED PROFESSIONAL ENGINEER John Sun No. C 54648 Exp. 12/31/05 CIVIL STATE OF CALIFORNIA

T.Y. LIN / MOFFATT & NICHOL
825 BATTERY STREET
SAN FRANCISCO, CA 94111

Caltrans now has a web site! To get to the web site, go to: http://www.dot.ca.gov

Caltrans Metric

REGISTERED PROFESSIONAL ENGINEER James P. Duxbury No. C 64677 Exp. 06/30/07 CIVIL STATE OF CALIFORNIA

FOR REVISIONS ONLY

MARK	DATE	DESCRIPTIONS	BY	CH'D	CCO#
2	01/31/07	CORROSION PROTECTION	JD	AS	16
1	07/21/06	W2 CAP BEAM ISD	JD	NV	23

REVISIONS

CONTRACT CHANGE ORDER NO. 16
SHEET 3 OF 12

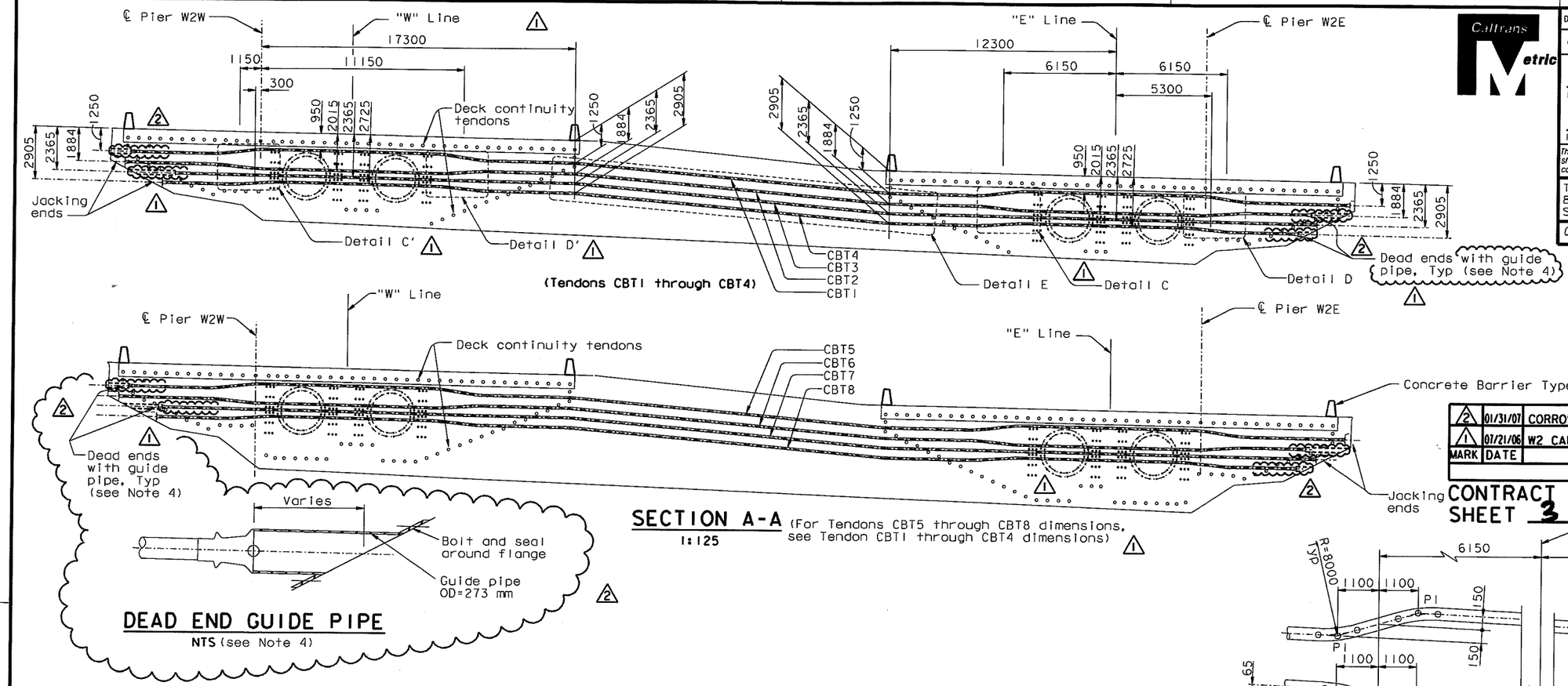

SECTION A-A (For Tendons CBT5 through CBT8 dimensions, see Tendon CBT1 through CBT4 dimensions)
1:125

DEAD END GUIDE PIPE
NTS (see Note 4)

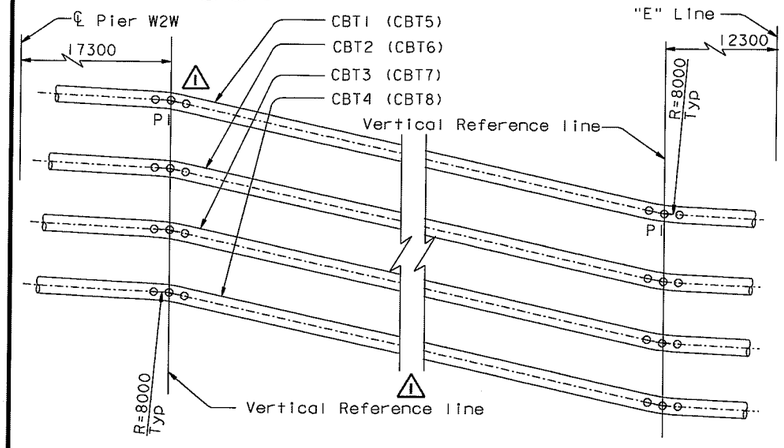

DETAIL E
NTS

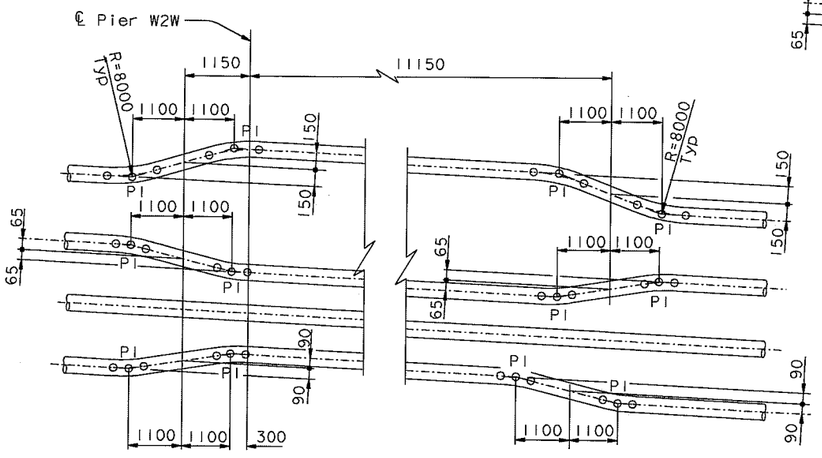

DETAIL C'
NTS

DETAIL D'
NTS

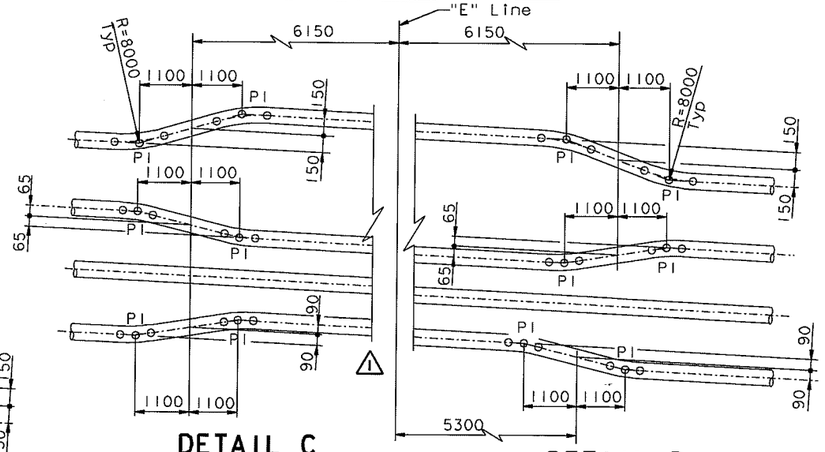

DETAIL C
NTS

DETAIL D
NTS

NOTES:

1. For additional details, see "W2 Cap Beam Post-Tensioning Details No. 1" sheet.
2. For PT blockout details, see "W2 Cap Beam Blockout Details" sheets.
3. For deck continuity tendon details, see "W2 Cap Beam Post-Tensioning Details No. 5" through "W2 Cap Beam Post-Tensioning Details No. 12" sheets.
4. Contractor shall coordinate the dead end guide pipe details with the PT System Supplier and shall submit them to the Engineer for review and approval. Contractor shall grout the guide pipe after stressing operations have been completed.

ALL DIMENSIONS ARE IN MILLIMETERS UNLESS OTHERWISE SHOWN

R. Valizadeh/V. Toan/Y.L./W.L./F.C.
DESIGN OVERSIGHT
SIGN OFF DATE 01/31/07
Rev. Date: 5-18-98

DESIGN	BY J. Sun	CHECKED M. Chen	
DETAILS	BY J. Duxbury	CHECKED M. Chen	
QUANTITIES	BY S. Shi	CHECKED D. Harrison	

PREPARED FOR THE STATE OF CALIFORNIA DEPARTMENT OF TRANSPORTATION

R. Manzanarez
PROJECT ENGINEER

BRIDGE NO. 34-0006L/R
KILOMETER POST 13.2/13.9

SAN FRANCISCO OAKLAND BAY BRIDGE
EAST SPAN SEISMIC SAFETY PROJECT
SELF-ANCHORED SUSPENSION BRIDGE
(SUPERSTRUCTURE & TOWER)

W2 CAP BEAM POST-TENSIONING DETAILS NO. 2

ORIGINAL SCALE IN MILLIMETERS FOR REDUCED PLANS 0 10 20 30 40 50 60 70 80 90 100

CU 04
EA 0120F1

DISREGARD PRINTS BEARING EARLIER REVISION DATES

REVISION DATES (PRELIMINARY STAGE ONLY) 08/02/99 05/31/01 04/08/02 07/01/02 12/19/02

SHEET 046R2 OF

FILE => I:\bb\04-012001\sas\contract plans and cco\cco\in progress\cco#16\aecpt02.dgn

100 % PS&E

USERNAME => visitor DATE PLOTTED => 15 MAR 2007 TIME PLOTTED => 15:24:30

DIST.	COUNTY	ROUTE	KILOMETER POST TOTAL PROJECT	SHEET NO.	TOTAL SHEETS
04	SF	80	13.2/13.9	466R2	1204

REGISTERED ENGINEER - CIVIL

12-6-04
PLANS APPROVAL DATE

REGISTERED PROFESSIONAL ENGINEER John Sun No. C 54648 Exp. 12/31/05 CIVIL STATE OF CALIFORNIA

The State of California or its officers or agents shall not be responsible for the accuracy or completeness of electronic copies of this plan sheet.

T.Y. LIN / MOFFATT & NICHOL
825 BATTERY STREET
SAN FRANCISCO, CA 94111

Caltrans now has a web site! To get to the web site, go to: http://www.dot.ca.gov

Caltrans Metric

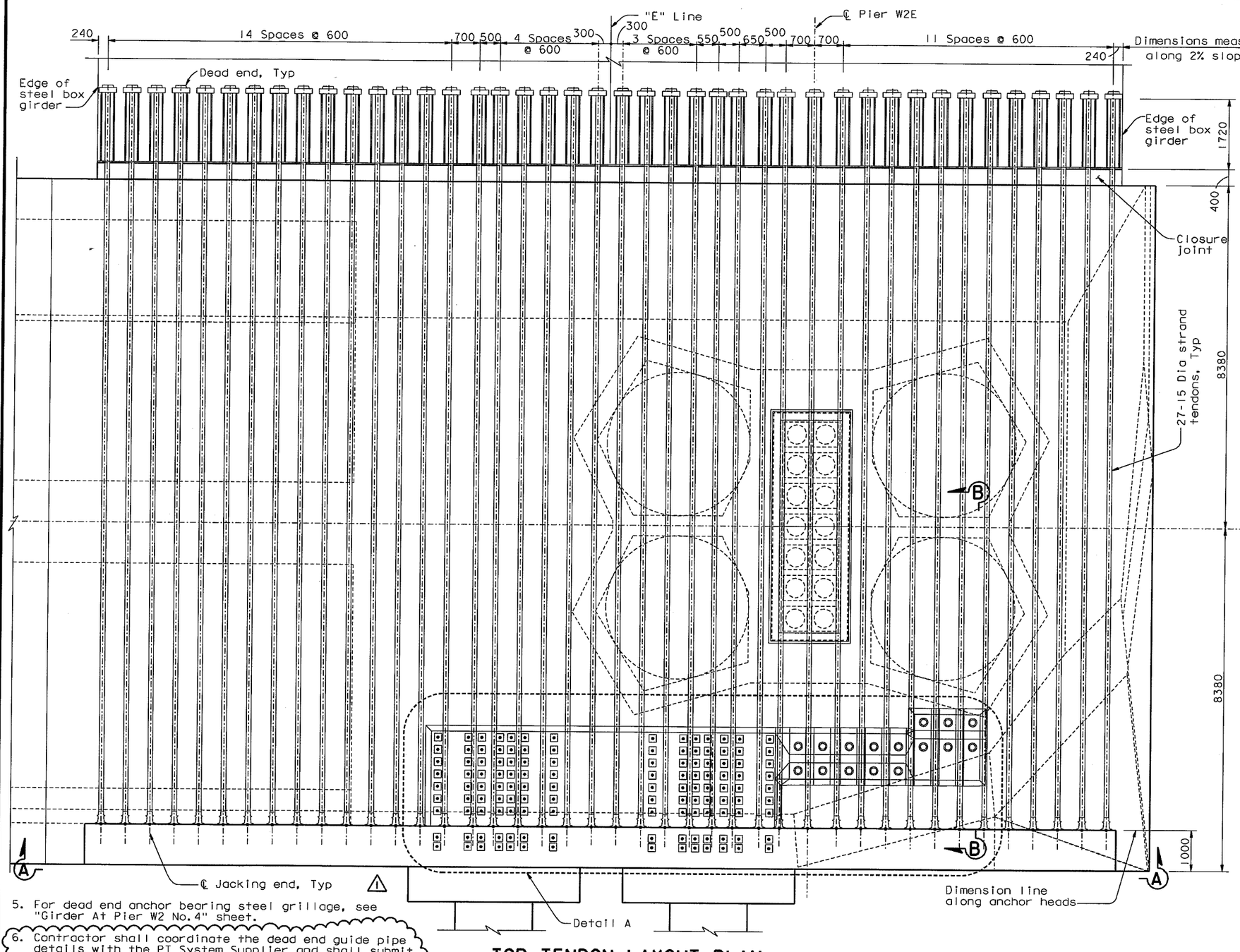

FOR REVISIONS ONLY

REGISTERED PROFESSIONAL ENGINEER James P. Duxbury No. C 64677 Exp. 06/30/07 CIVIL STATE OF CALIFORNIA

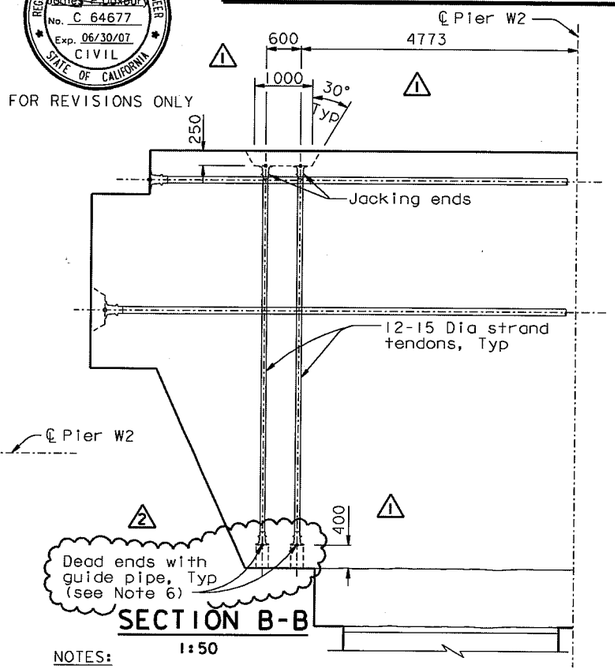

SECTION B-B
1:50

NOTES:

1. For Section A-A, see "W2 Cap Beam Post-Tensioning Details No. 9" sheet.
2. For Detail A, see "W2 Cap Beam Post-Tensioning Details No. 10" sheet.
3. All W2 cap beam continuity tendons are ASTM A416 Grade 270 (fu=1860 MPa), low relaxation, 27-15 Dia seven wire strand PT, unless specified otherwise. For additional prestressing details, see "Prestressing Notes" sheet.
4. For blockout details, see "W2 Cap Beam Blockout Details" sheets.

5. For dead end anchor bearing steel grillage, see "Girder At Pier W2 No. 4" sheet.
6. Contractor shall coordinate the dead end guide pipe details with the PT System Supplier and shall submit them to the Engineer for review and approval. Contractor shall grout the guide pipe after stressing operations have been completed. 2

TOP TENDON LAYOUT PLAN ("E" Line)
1:50

MARK	DATE	DESCRIPTIONS	BY	CH'D	CCO#
2	01/31/07	CORROSION PROTECTION	JD	AS	16
1	07/21/06	W2 CAP BEAM ISD	JD	NV	23

REVISIONS

CONTRACT CHANGE ORDER NO. 16
SHEET 4 OF 12

ALL DIMENSIONS ARE IN MILLIMETERS UNLESS OTHERWISE SHOWN

SAN FRANCISCO OAKLAND BAY BRIDGE
EAST SPAN SEISMIC SAFETY PROJECT
SELF-ANCHORED SUSPENSION BRIDGE
(SUPERSTRUCTURE & TOWER)

W2 CAP BEAM POST-TENSIONING DETAILS NO. 5

R. Valizadeh/V. Toan/Y.L./W.L./F.C.
DESIGN OVERSIGHT
Roger Valizadeh / Vong Toan / Y. Liu
SIGN OFF DATE 01/31/07

	BY	CHECKED
DESIGN	J. Sun	M. Chen
DETAILS	J. Duxbury	M. Chen
QUANTITIES	S. Shi	D. Harrison

PREPARED FOR THE STATE OF CALIFORNIA DEPARTMENT OF TRANSPORTATION

R. Manzanarez
PROJECT ENGINEER

BRIDGE NO. 34-0006L/R
KILOMETER POST 13.2/13.9

Rev. Date: 5-18-98

ORIGINAL SCALE IN MILLIMETERS FOR REDUCED PLANS 0 10 20 30 40 50 60 70 80 90 100

CU 04
EA 0120F1

DISREGARD PRINTS BEARING EARLIER REVISION DATES

REVISION DATES (PRELIMINARY STAGE ONLY) 08/02/99 05/31/01 04/30/02 07/01/02 12/19/02

SHEET 049R2 OF

FILE => I:\bb\04-012001\sas\contract plans and cco\cco\in progress\cco#16\aecpt05.dgn

USERNAME => visitor DATE PLOTTED => 15 MAR 2007 TIME PLOTTED => 15:26:12

100 % PS&E

DIST.	COUNTY	ROUTE	KILOMETER POST TOTAL PROJECT	SHEET NO.	TOTAL SHEETS
04	SF	80	13.2/13.9	468R2	1204

REGISTERED ENGINEER - CIVIL

12-6-04
PLANS APPROVAL DATE

REGISTERED PROFESSIONAL ENGINEER John Sun No. C 54648 Exp. 12/31/05 CIVIL STATE OF CALIFORNIA

The State of California or its officers or agents shall not be responsible for the accuracy or completeness of electronic copies of this plan sheet.

T.Y. LIN / MOFFATT & NICHOL
825 BATTERY STREET
SAN FRANCISCO, CA 94111

Caltrans now has a web site! To get to the web site, go to: http://www.dot.ca.gov

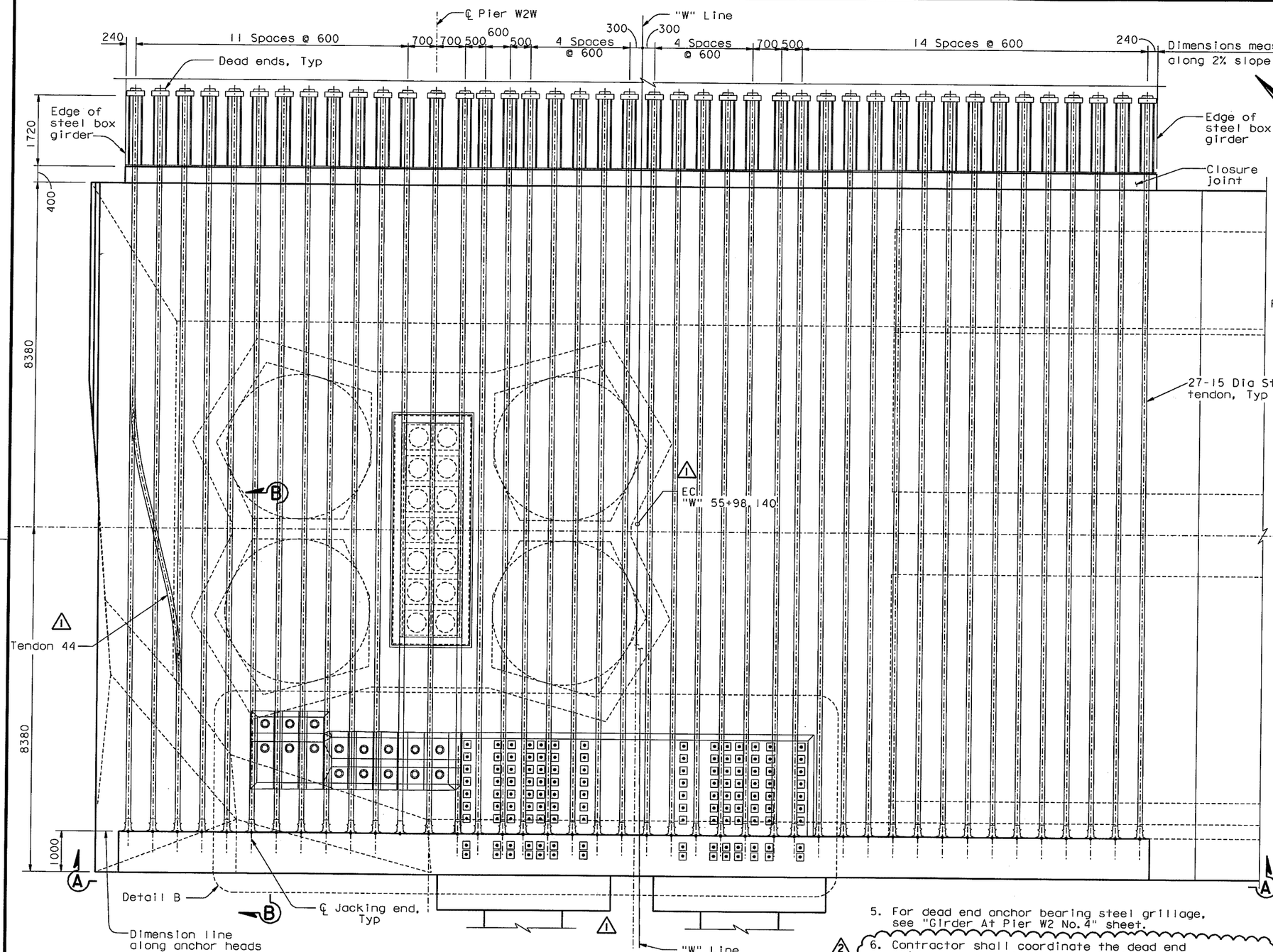

TOP TENDON LAYOUT PLAN ("W" Line)

1:50

ALL DIMENSIONS ARE IN MILLIMETERS UNLESS OTHERWISE SHOWN

REGISTERED PROFESSIONAL ENGINEER James P. Duxbury No. C 64677 Exp. 06/30/07 CIVIL STATE OF CALIFORNIA

FOR REVISIONS ONLY

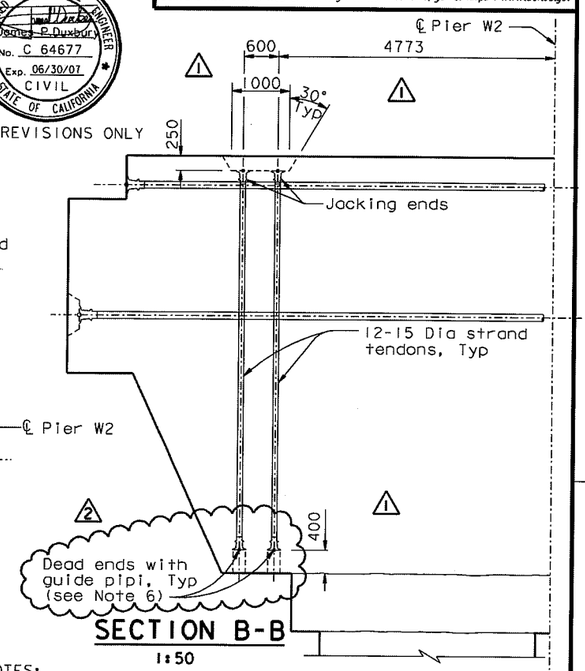

SECTION B-B

1:50

NOTES:

1. For Section A-A, see "W2 Cap Beam Post-Tensioning Details No. 9" sheet.
2. For Detail B, see "W2 Cap Beam Post-Tensioning Details No. 10" sheet.
3. All W2 cap beam continuity tendons are ASTM A416 Grade 270 (fu=1860 MPa), low relaxation, 27-15 Dia seven wire strand PT, unless specified otherwise. For additional prestressing details, see "Prestressing Notes" sheet.
4. For blockout details, see "W2 Cap Beam Blockout Details" sheets.
5. For dead end anchor bearing steel grillage, see "Girder At Pier W2 No. 4" sheet.
6. Contractor shall coordinate the dead end guide pipe details with the PT System Supplier and shall submit them to the Engineer for review and approval. Contractor shall grout the guide pipe after stressing operations have been completed.

MARK	DATE	DESCRIPTIONS	BY	CH'D	CCO#
2	01/31/07	CORROSION PROTECTION	JD	AS	16
1	07/21/06	W2 CAP BEAM ISD	JD	NV	23

REVISIONS

CONTRACT CHANGE ORDER NO. 16
SHEET 5 OF 12

SAN FRANCISCO OAKLAND BAY BRIDGE
EAST SPAN SEISMIC SAFETY PROJECT
SELF-ANCHORED SUSPENSION BRIDGE
(SUPERSTRUCTURE & TOWER)

W2 CAP BEAM POST-TENSIONING DETAILS NO. 7

R. Valizadeh/V. Toan/Y.L./W.L./F.C.
DESIGN OVERSIGHT
SIGN OFF DATE 01/31/07

	BY	CHECKED
DESIGN	J. Sun	M. Chen
DETAILS	J. Duxbury	M. Chen
QUANTITIES	S. Shi	D. Harrison

PREPARED FOR THE STATE OF CALIFORNIA DEPARTMENT OF TRANSPORTATION

R. Manzanarez
PROJECT ENGINEER

BRIDGE NO. 34-0006L/R
KILOMETER POST 13.2/13.9

Rev. Date: 5-18-98

ORIGINAL SCALE IN MILLIMETERS FOR REDUCED PLANS 0 10 20 30 40 50 60 70 80 90 100

CU 04
EA 0120F1

DISREGARD PRINTS BEARING EARLIER REVISION DATES

REVISION DATES (PRELIMINARY STAGE ONLY) 08/07/99 05/31/01 04/08/02 07/01/02 12/19/02

SHEET 051R2 OF

FILE => I:\bb\04-012001\sas\contract plans and cco\cco\in progress\cco#16\oecpt07.dgn

USERNAME => visitor DATE PLOTTED => 15 MAR 2007 TIME PLOTTED => 15:27:40

100 % PS&E

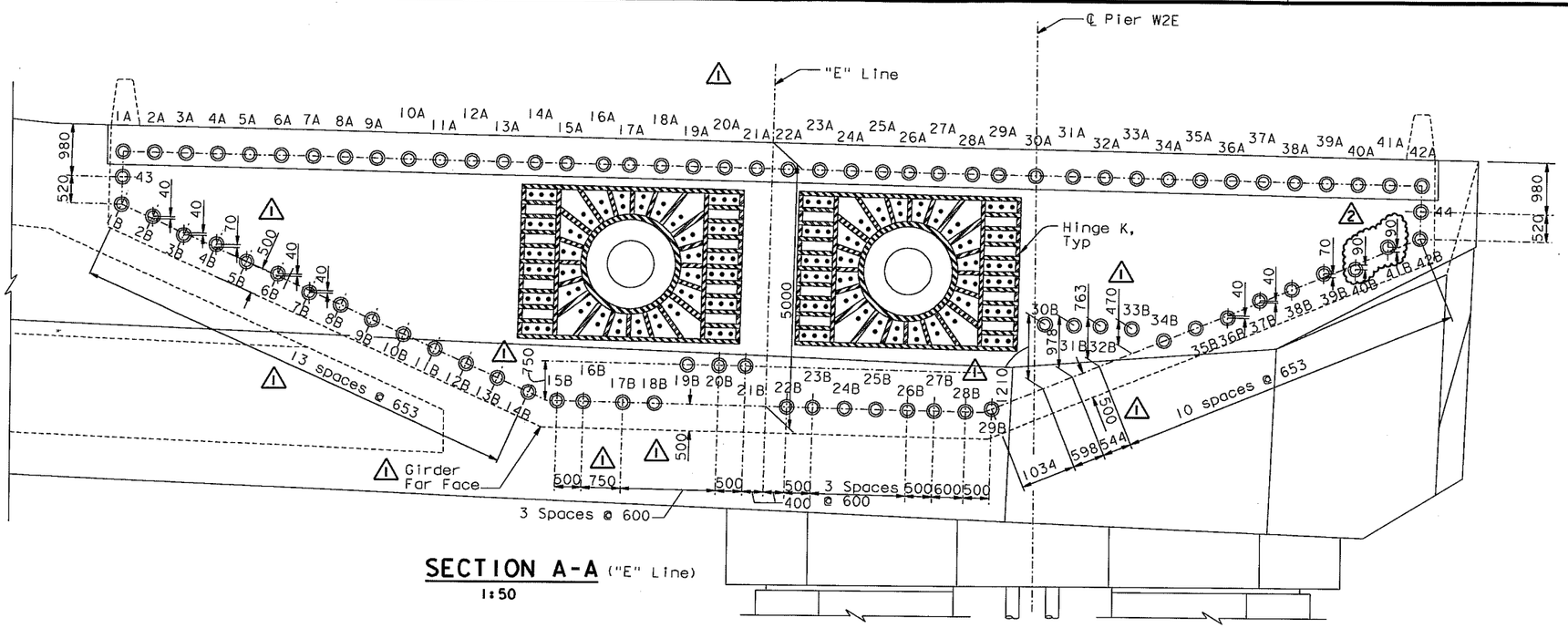

SECTION A-A ("E" Line)
1:50

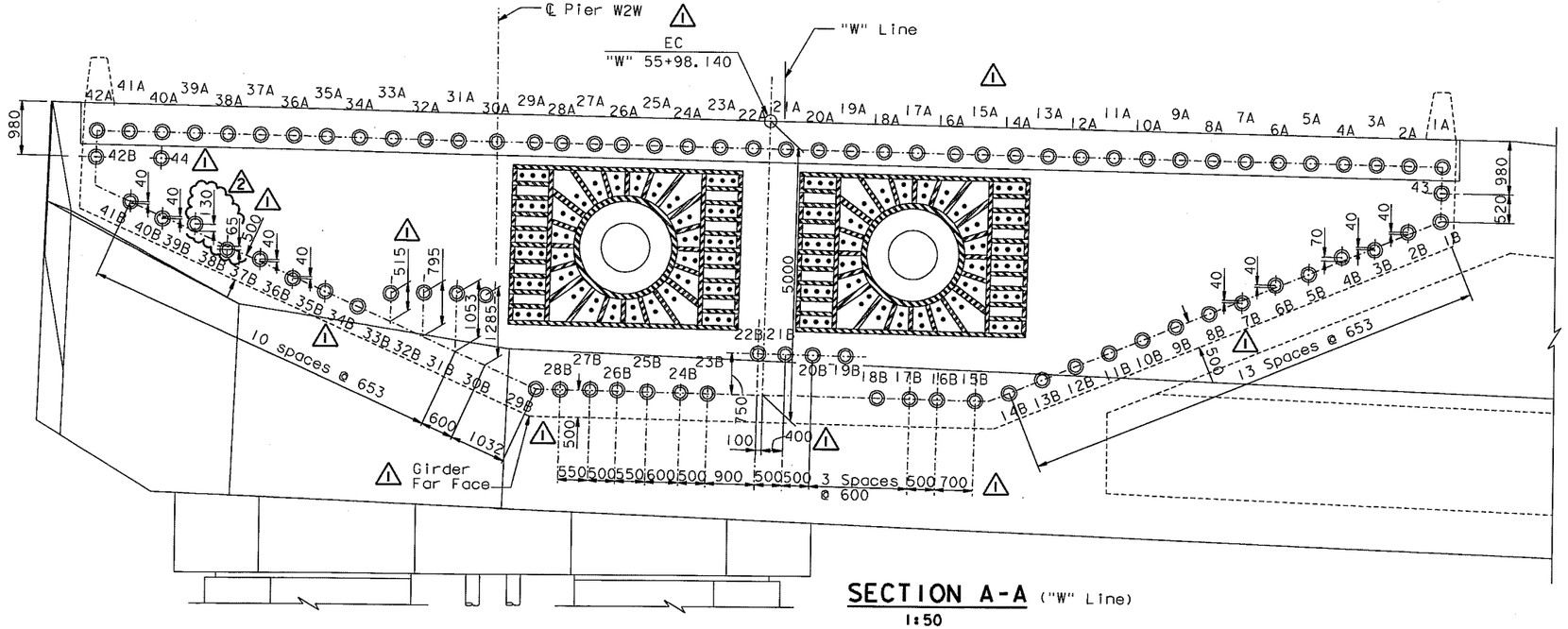

SECTION A-A ("W" Line)
1:50

NOTES:

1. For additional details, see "W2 Cap Beam Post-Tensioning Details No.5" and "W2 Cap Beam Post-Tensioning Details No.7" sheets.
2. Jacking force in the W2 cap beam continuity tendons (1A-42A, 1B-42B, 43 & 44) shall be 5265 kN typical.

ALL DIMENSIONS ARE IN MILLIMETERS UNLESS OTHERWISE SHOWN

DIST.	COUNTY	ROUTE	KILOMETER POST TOTAL PROJECT	SHEET NO.	TOTAL SHEETS
04	SF	80	13.2/13.9	470R2	1204

REGISTERED ENGINEER - CIVIL
12-6-04
PLANS APPROVAL DATE

REGISTERED PROFESSIONAL ENGINEER — John Sun — No. C 54648 — Exp. 12/31/05 — CIVIL — STATE OF CALIFORNIA

The State of California or its officers or agents shall not be responsible for the accuracy or completeness of electronic copies of this plan sheet.

T.Y. LIN / MOFFATT & NICHOL
825 BATTERY STREET
SAN FRANCISCO, CA 94111

Caltrans now has a web site! To get to the web site, go to: http://www.dot.ca.gov

REGISTERED PROFESSIONAL ENGINEER — James P. Duxbury — No. C 64677 — Exp. 06/30/07 — CIVIL — STATE OF CALIFORNIA

FOR REVISIONS ONLY

MARK	DATE	DESCRIPTIONS	BY	CH'D	CCO#
		REVISIONS			
2	01/31/07	CORROSION PROTECTION	JD	AS	16
1	07/21/06	W2 CAP BEAM ISD	JD	NV	23

CONTRACT CHANGE ORDER NO. 16
SHEET 6 OF 12

100 % PS&E

DATE PLOTTED => 15 MAR 2007 TIME PLOTTED => 15:29:05
USERNAME =>\visitor

	BY	CHECKED
DESIGN	J. Sun	M. Chen
DETAILS	J. Duxbury	M. Chen
QUANTITIES	S. Shi	D. Harrison

PREPARED FOR THE STATE OF CALIFORNIA
DEPARTMENT OF TRANSPORTATION

R. Manzanarez
PROJECT ENGINEER

BRIDGE NO. 34-0006L/R
KILOMETER POST 13.2/13.9

SAN FRANCISCO OAKLAND BAY BRIDGE
EAST SPAN SEISMIC SAFETY PROJECT
SELF-ANCHORED SUSPENSION BRIDGE
(SUPERSTRUCTURE & TOWER)

W2 CAP BEAM POST-TENSIONING DETAILS NO. 9

R. Valizadeh/V. Toan/Y.L./W.L./F.C.
DESIGN OVERSIGHT
SIGN OFF DATE 01/31/07

Rev. Date: 5-18-98

ORIGINAL SCALE IN MILLIMETERS FOR REDUCED PLANS 0 10 20 30 40 50 60 70 80 90 100

CU 04
EA 0120F1

DISREGARD PRINTS BEARING EARLIER REVISION DATES →
REVISION DATES (PRELIMINARY STAGE ONLY): 08/06/99 | 05/31/01 | 04/08/02 | 07/05/02 | 12/19/02

SHEET 053R2 OF

FILE => I:\bb\04-012001\sas\contract plans and cco\cco\In progress\cco#16\aecpt09.dgn

W2 CAP BEAM CONTINUITY TENDON TABLE-1 FOR "E" LINE

Tendon No.	Type	Tendon No.	Type
1A	1	24A	1
1B	2	24B	2
2A	1	25A	1
2B	5	25B	2
3A	1	26A	1
3B	5	26B	2
4A	1	27A	1
4B	5	27B	2
5A	1	28A	1
5B	2	28B	2
6A	1	29A	3
6B	5	29B	2
7A	1	30A	3
△1 7B	5	30B	5,9
8A	1	31A	3
8B	2	31B	5
9A	1	32A	1
9B	2	32B	5
10A	1	33A	1
10B	2	33B	5
11A	1	34A	1
11B	2	34B	2
12A	1	35A	1
12B	2	35B	2
13A	1	36A	1
13B	2	36B	5
14A	1	37A	1
14B	2	37B	5
15A	1	38A	1
15B	8 △1	38B	2
16A	1	39A	1
16B	8 △1	39B	5
17A	1	40A	1
17B	2	40B	5
18A	1	41A	1
18B	10 △1	41B	5
19A	1	42A	1
19B	4	42B	2
20A	1	43	2
20B	4	44	2
21A	1		
21B	4		
22A	1		
22B	2		
23A	1		
23B	2		

W2 CAP BEAM CONTINUITY TENDON TABLE-1 FOR "W" LINE

Tendon No.	Type	Tendon No.	Type
1A	1	24A	1
1B	2	24B	2
2A	1	25A	1
2B	5	25B	2
3A	1	26A	1
△1 3B	5	26B	8
4A	1	27A	1
△1 4B	5	27B	8
5A	1	28A	1
5B	2	28B	2
6A	1	29A	3
6B	5	29B	2
7A	1	30A	3
△1 7B	5	30B	5,9
8A	1	31A	3
8B	2	31B	5
9A	1	32A	1
9B	2	32B	5
10A	1	33A	1
10B	2	33B	5
11A	1	34A	1
11B	2	34B	2
12A	1	35A	1
12B	2	35B	2
13A	1	36A	1
13B	2	36B	5
14A	1	37A	1
14B	2	37B	5
15A	1	38A	1
15B	2	38B	(5) △2
16A	1	39A	1
16B	2	39B	5
17A	1	40A	1
17B	2	40B	5
18A	1	41A	1
18B	2	41B	5
19A	1	42A	1
19B	4	42B	6 △1
20A	1	43	2
20B	4	44	7 △1
21A	1		
21B	4,8	△1	
22A	1		
22B	4,8	△1	
23A	1		
23B	2		

W2 CAP BEAM CONTINUITY TENDON TABLE-2 FOR "E" LINE

Tendon No.	h	L	e_5	R
2B	-40	2200	500	8000
3B	+40	2200	500	8000
4B	-70	2200	500	8000
6B	-40	2200	500	8000
7B	+40	2200	500	8000
△1 30B	-1210	2400	1200	4000
31B	-978	2400	1200	5000
32B	-763	2400	1200	4000
△1 33B	-470	2400	1200	8000
36B	+40	2200	500	8000
37B	-40	2200	500	8000
39B	-70	2200	500	8000
40B	△2 +90	2200	500	8000
41B	-90	2200	500	8000

△1 Tendon No.	p
15B	-50
16B	-50
30B	+200

W2 CAP BEAM CONTINUITY TENDON TABLE-2 FOR "W" LINE

Tendon No.	h	L	e_5	R
2B	-40	2200	500	8000
3B	+40	2200	500	8000
4B	-70	2200	500	8000
6B	-40	2200	500	8000
7B	+40	2200	500	8000
△1 30B	-1285	-1285	1200	4000
31B	-1053	2400	1200	5000
32B	-795	2400	1200	5000
△1 33B	-515	2400	1200	8000
36B	+40	2200	500	8000
37B	-40	2200	500	8000
38B	+65	2200	500	8000 △2
39B	(-130) △2	2200	500	8000
40B	+40	2200	500	8000
41B	-40	2200	500	8000

△1 Tendon No.	p
21B	+100
22B	+100
26B	-50
27B	-50
30B	-200
44	+1200

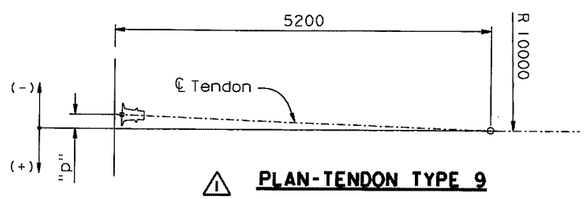

△1 **PLAN-TENDON TYPE 9**

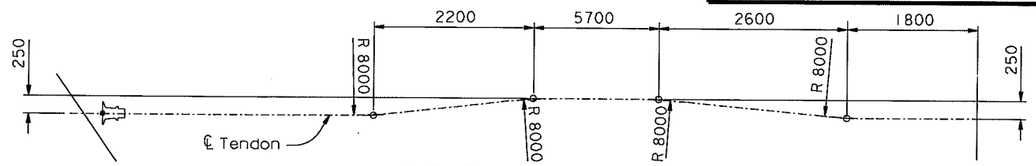

△1 **ELEVATION-TENDON TYPE 10**

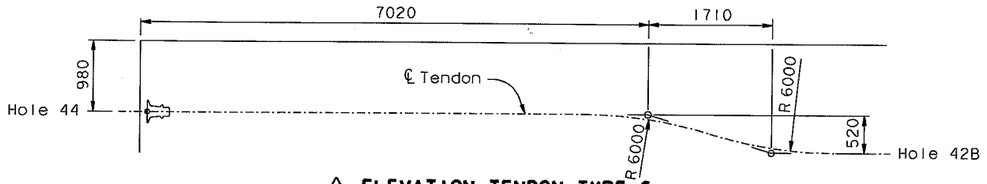

△1 **ELEVATION-TENDON TYPE 6**

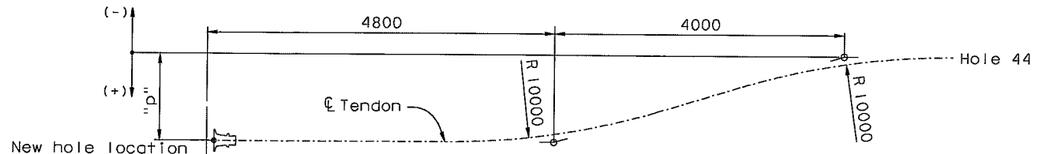

△1 **PLAN-TENDON TYPE 7**

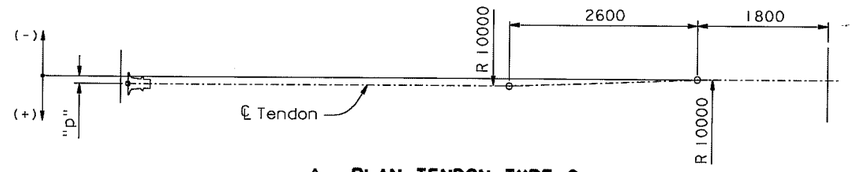

△1 **PLAN-TENDON TYPE 8**

NOTES:

1. For Type 1 through Type 5 tendon geometry, see "W2 Cap Beam Post-Tensioning Details No. 11" sheet.
2. For general stressing sequence, see "Pier W2 Construction Sequence" sheet.
3. For additional prestressing details, see "Prestressing Notes" sheet.

ALL DIMENSIONS ARE IN MILLIMETERS UNLESS OTHERWISE SHOWN

DIST.	COUNTY	ROUTE	KILOMETER POST TOTAL PROJECT	SHEET NO.	TOTAL SHEETS
04	SF	80	13.2/13.9	473R2	1204

Caltrans Metric

REGISTERED ENGINEER - CIVIL

12-6-04
PLANS APPROVAL DATE

REGISTERED PROFESSIONAL ENGINEER — John Sun — No. C 54648 — Exp. 12/31/05 — CIVIL — STATE OF CALIFORNIA

The State of California or its officers or agents shall not be responsible for the accuracy or completeness of electronic copies of this plan sheet.

T.Y. LIN / MOFFATT & NICHOL
825 BATTERY STREET
SAN FRANCISCO, CA 94111

To get to the web site, go to: http://www.dot.ca.gov

FOR REVISIONS ONLY

MARK	DATE	DESCRIPTIONS	BY	CH'D	CCO#
		REVISIONS			
△2	01/31/07	CORROSION PROTECTION	JD	AS	16
△1	07/21/06	W2 CAP BEAM ISD	JD	NV	23

CONTRACT CHANGE ORDER NO. 16
SHEET 7 OF 12

100 % PS&E

DATE PLOTTED => 15 MAR 2007 TIME PLOTTED => 15:30:33
USERNAME => visitor

R. Valizadeh/V. Toan/Y.L./W.L./F.C.
DESIGN OVERSIGHT
SIGN OFF DATE 01/31/07

	BY	CHECKED
DESIGN	J. Sun	M. Chen
DETAILS	J. Duxbury	M. Chen
QUANTITIES	S. Shi	D. Harrison

PREPARED FOR THE STATE OF CALIFORNIA
DEPARTMENT OF TRANSPORTATION

R. Manzanarez
PROJECT ENGINEER

BRIDGE NO. 34-0006L/R
KILOMETER POST 13.2/13.9

SAN FRANCISCO OAKLAND BAY BRIDGE
EAST SPAN SEISMIC SAFETY PROJECT
SELF-ANCHORED SUSPENSION BRIDGE
(SUPERSTRUCTURE & TOWER)

W2 CAP BEAM POST-TENSIONING DETAILS NO. 12

Rev. Date: 5-18-98

ORIGINAL SCALE IN MILLIMETERS FOR REDUCED PLANS 0 10 20 30 40 50 60 70 80 90 100

CU 04
EA 0120F1

DISREGARD PRINTS BEARING EARLIER REVISION DATES →
REVISION DATES (PRELIMINARY STAGE ONLY): 05/17/01 04/08/02 01/21/02 12/19/02

SHEET 056R2 OF

FILE => I:\bb\04-0120F1\sas\contract plans and cco\cco\in progress\cco#16\decpt12.dgn

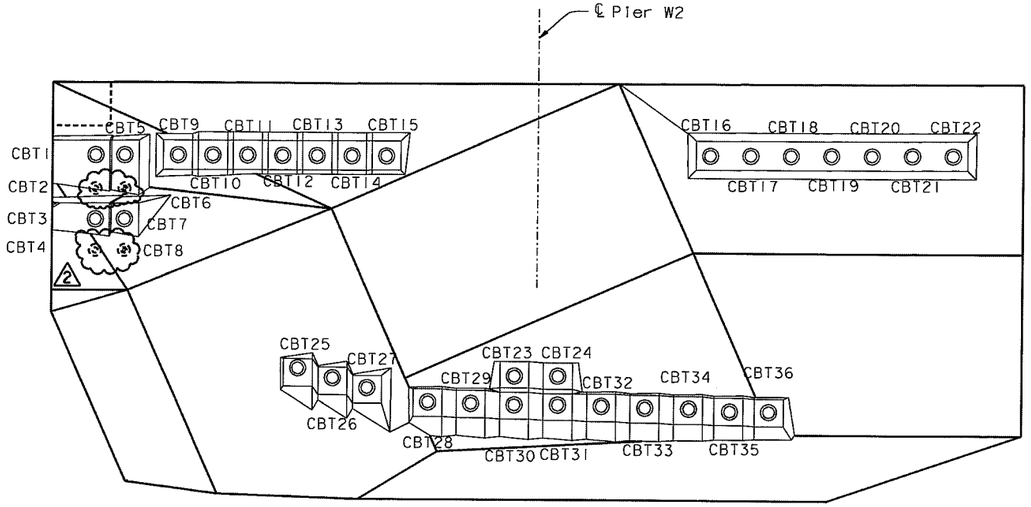

⚠2 **ELEVATION** (Cap beam transverse PT tendons)
1:50

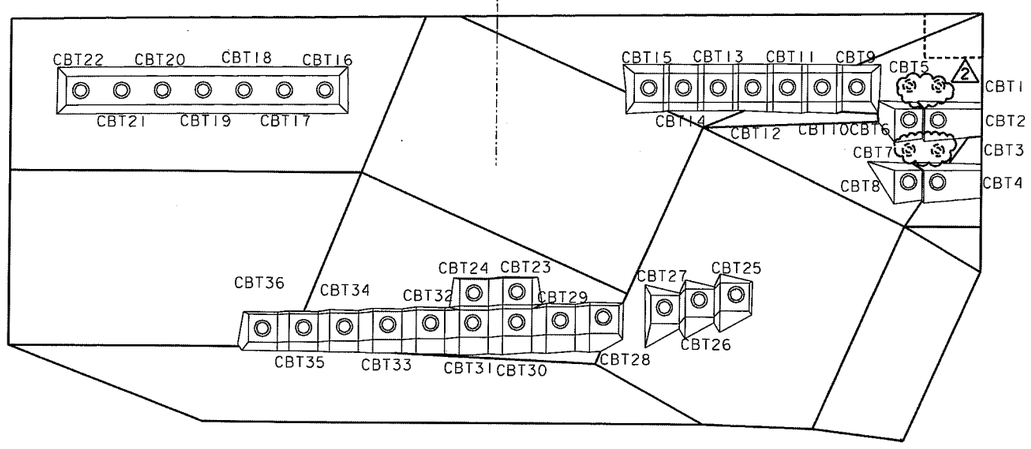

⚠1 **ELEVATION** (Cap beam transverse PT tendons)
1:50

CAP BEAM TRANSVERSE PT TENDON BLOCKOUT TABLE

South face		North face	
Tendon	Blockout Detail	Tendon	Blockout Detail
CBT1	R	CBT1	S
CBT2	R	CBT2	S
CBT3	R	CBT3	S
CBT4	R	CBT4	S
CBT5	R	CBT5	S
CBT6	R	CBT6	S
CBT7	R	CBT7	S
CBT8	R	CBT8	S
CBT9	J	CBT9	J
CBT10	J	CBT10	J
CBT11	K	CBT11	K
CBT12	K	CBT12	K
CBT13	K	CBT13	K
CBT14	K	CBT14	K
CBT15	K	CBT15	K
CBT16	L	CBT16	L
CBT17	L	CBT17	L
CBT18	L	CBT18	L
CBT19	L	CBT19	L
CBT20	L	CBT20	L
CBT21	L	CBT21	L
CBT22	L	CBT22	L
CBT23	P	CBT23	P
CBT24	P	CBT24	P
CBT25	M	CBT25	M
CBT26	M	CBT26	M
CBT27	M	CBT27	M
CBT28	N	CBT28	N
CBT29	N	CBT29	N
CBT30	P	CBT30	P
CBT31	P	CBT31	P
CBT32	N	CBT32	N
CBT33	N	CBT33	N
CBT34	N	CBT34	N
CBT35	N	CBT35	N
CBT36	Q	CBT36	Q

Caltrans Metric

DIST.	COUNTY	ROUTE	KILOMETER POST TOTAL PROJECT	SHEET NO.	TOTAL SHEETS
04	SF	80	13.2/13.9	499R2	1204

REGISTERED ENGINEER - CIVIL
12-6-04
PLANS APPROVAL DATE
The State of California or its officers or agents shall not be responsible for the accuracy or completeness of electronic copies of this plan sheet.

REGISTERED PROFESSIONAL ENGINEER — John Sun — No. C 54648 — Exp. 12/31/05 — CIVIL — STATE OF CALIFORNIA

T.Y. LIN / MOFFATT & NICHOL
825 BATTERY STREET
SAN FRANCISCO, CA 94111

Caltrans now has a web site! To get to the web site, go to: http://www.dot.ca.gov

REGISTERED PROFESSIONAL ENGINEER — James P. Duxbury — No. C 64677 — Exp. 06/30/07 — CIVIL — STATE OF CALIFORNIA

FOR REVISIONS ONLY

MARK	DATE	DESCRIPTIONS	BY	CH'D	CCO#
		REVISIONS			
⚠2	01/31/07	CORROSION PROTECTION	JD	AS	16
⚠1	07/21/06	W2 CAP BEAM ISD	JD	NV	23

CONTRACT CHANGE ORDER NO. 16
SHEET 8 OF 12

NOTES:

1. For Details J through L, see "W2 Cap Beam Blockout Details No.6" sheet.
2. For Details M and N, see "W2 Cap Beam Blockout Details No.7" sheet.
3. For Details P and Q, see "W2 Cap Beam Blockout Details No.8" sheet.
4. For Detail R, see "W2 Cap Beam Blockout Details No.9" sheet.
5. For Detail S, see "W2 Cap Beam Blockout Details No.10" sheet.
6. For additional prestressing details, see "Prestressing Notes" sheet.

100% PS&E
DATE PLOTTED => 15 MAR 2007 TIME PLOTTED => 15:32:24
USERNAME => visitor

ALL DIMENSIONS ARE IN MILLIMETERS UNLESS OTHERWISE SHOWN

R. Valizadeh/V. Toan/Y.L./W.L./F.C.
DESIGN OVERSIGHT
SIGN OFF DATE 01/31/07

	BY	CHECKED
DESIGN	J. Sun	M. Chen
DETAILS	J. Duxbury	M. Chen
QUANTITIES	S. Shi	D. Harrison

PREPARED FOR THE STATE OF CALIFORNIA DEPARTMENT OF TRANSPORTATION

R. Manzanarez
PROJECT ENGINEER

BRIDGE NO. 34-0006L/R
KILOMETER POST 13.2/13.9

CU 04
EA 0120F1

SAN FRANCISCO OAKLAND BAY BRIDGE
EAST SPAN SEISMIC SAFETY PROJECT
SELF-ANCHORED SUSPENSION BRIDGE
(SUPERSTRUCTURE & TOWER)

W2 CAP BEAM BLOCKOUT DETAILS NO.2

Rev. Date: 5-18-98

ORIGINAL SCALE IN MILLIMETERS FOR REDUCED PLANS 0 10 20 30 40 50 60 70 80 90 100

DISREGARD PRINTS BEARING EARLIER REVISION DATES →

REVISION DATES (PRELIMINARY STAGE ONLY)										SHEET	OF
04/02/99	05/17/01	04/30/02	07/19/02	12/19/02						82R2	

FILE => I:\bb\04-012001\sas\contract plans and cco\cco\In progress\cco#16\aecbb02.dgn

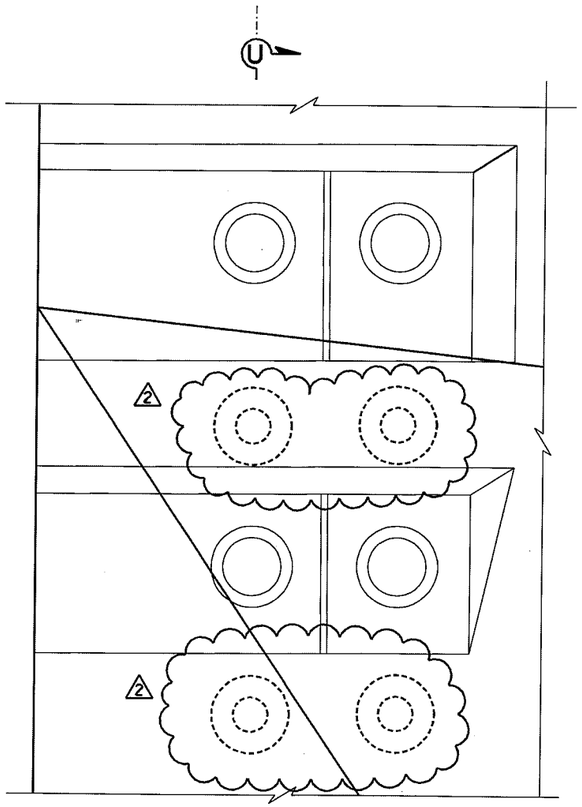

⚠1 DETAIL R
1:10

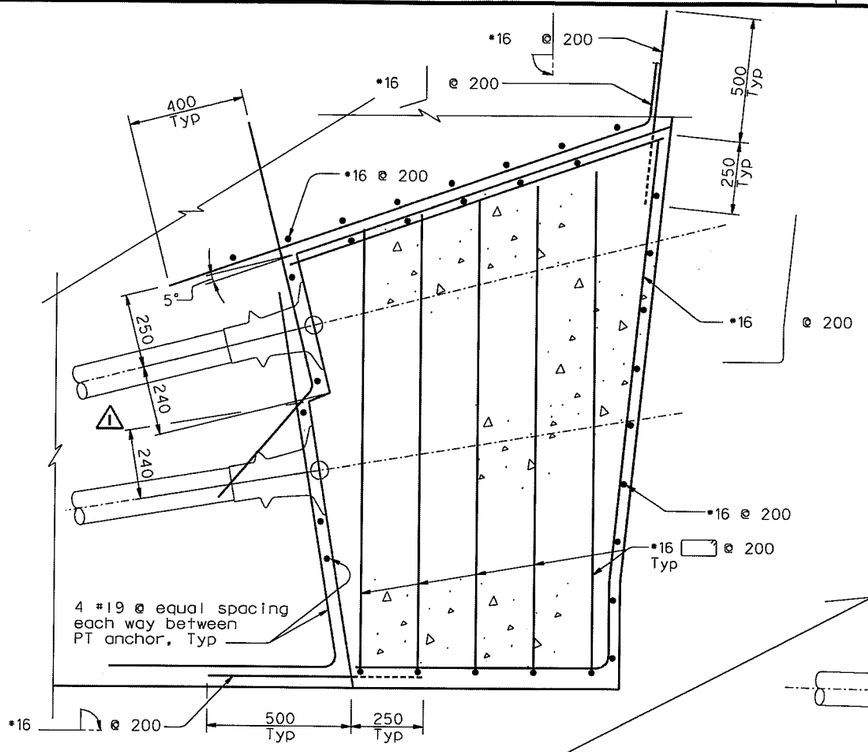

SECTION V-V
1:10

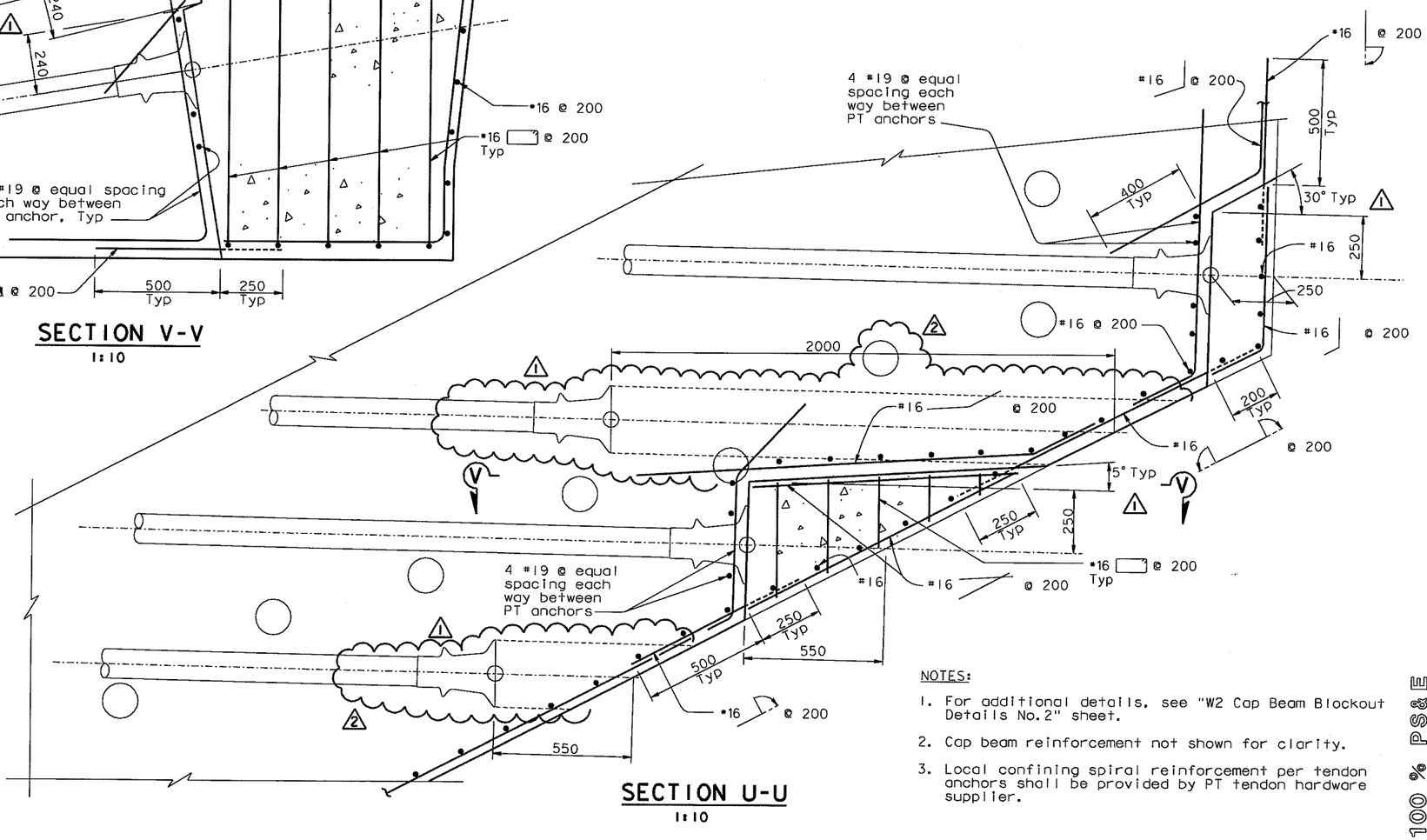

SECTION U-U
1:10

NOTES:

1. For additional details, see "W2 Cap Beam Blockout Details No.2" sheet.
2. Cap beam reinforcement not shown for clarity.
3. Local confining spiral reinforcement per tendon anchors shall be provided by PT tendon hardware supplier.

Caltrans Metric

DIST.	COUNTY	ROUTE	KILOMETER POST TOTAL PROJECT	SHEET NO.	TOTAL SHEETS
04	SF	80	13.2/13.9	506R2	1204

REGISTERED ENGINEER - CIVIL

REGISTERED PROFESSIONAL ENGINEER — John Sun — No. C 54648 — Exp. 12/31/05 — CIVIL — STATE OF CALIFORNIA

12-6-04
PLANS APPROVAL DATE

The State of California or its officers or agents shall not be responsible for the accuracy or completeness of electronic copies of this plan sheet.

T.Y. LIN / MOFFATT & NICHOL
825 BATTERY STREET
SAN FRANCISCO, CA 94111

Caltrans now has a web site! To get to the web site, go to: http://www.dot.ca.gov

REGISTERED PROFESSIONAL ENGINEER — Jessica P. Duxbury — No. C 64677 — Exp. 06/30/07 — CIVIL — STATE OF CALIFORNIA

FOR REVISIONS ONLY

MARK	DATE	DESCRIPTIONS	BY	CH'D	CCO#
		REVISIONS			
⚠2	01/31/07	CORROSION PROTECTION	JD	NV	16
⚠1	07/21/06	W2 CAP BEAM ISD	JD	NV	23

CONTRACT CHANGE ORDER NO. 16
SHEET 9 OF 12

ALL DIMENSIONS ARE IN MILLIMETERS UNLESS OTHERWISE SHOWN

R. Valizadeh/V. Toan/Y.L./W.L./F.C.
DESIGN OVERSIGHT
SIGN OFF DATE 01/31/07

	BY	CHECKED
DESIGN	J. Sun	M. Chen
DETAILS	J. Duxbury	M. Chen
QUANTITIES	S. Shi	D. Harrison

PREPARED FOR THE STATE OF CALIFORNIA
DEPARTMENT OF TRANSPORTATION

R. Manzanarez
PROJECT ENGINEER

BRIDGE NO. 34-0006L/R
KILOMETER POST 13.2/13.9

SAN FRANCISCO OAKLAND BAY BRIDGE
EAST SPAN SEISMIC SAFETY PROJECT
SELF-ANCHORED SUSPENSION BRIDGE
(SUPERSTRUCTURE & TOWER)

W2 CAP BEAM BLOCKOUT DETAILS NO. 9

Rev. Date: 5-18-98

ORIGINAL SCALE IN MILLIMETERS FOR REDUCED PLANS 0 10 20 30 40 50 60 70 80 90 100

CU 04
EA 0120F1

DISREGARD PRINTS BEARING EARLIER REVISION DATES

REVISION DATES (PRELIMINARY STAGE ONLY): 05/31/01 | 04/09/02 | 07/01/02 | 12/19/02

SHEET 89R2 OF

FILE => I:\bb\04-0120F1\sas\contract plans and cco\cco\In progress\cco#16\aecbb09.dgn

100% PS&E
DATE PLOTTED => 15 MAR 2007 TIME PLOTTED => 15:33:45
USERNAME => visitor

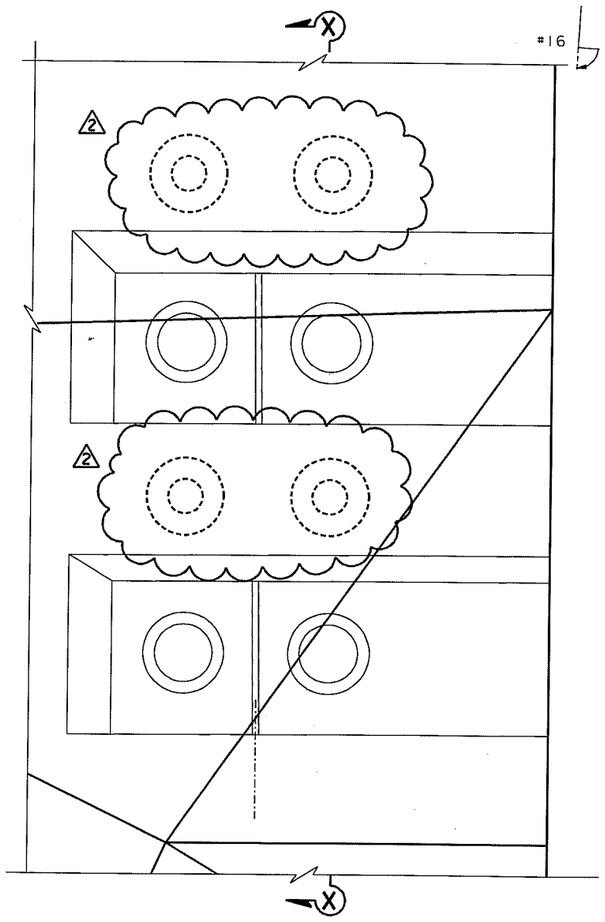

⚠1 DETAIL S
1:10

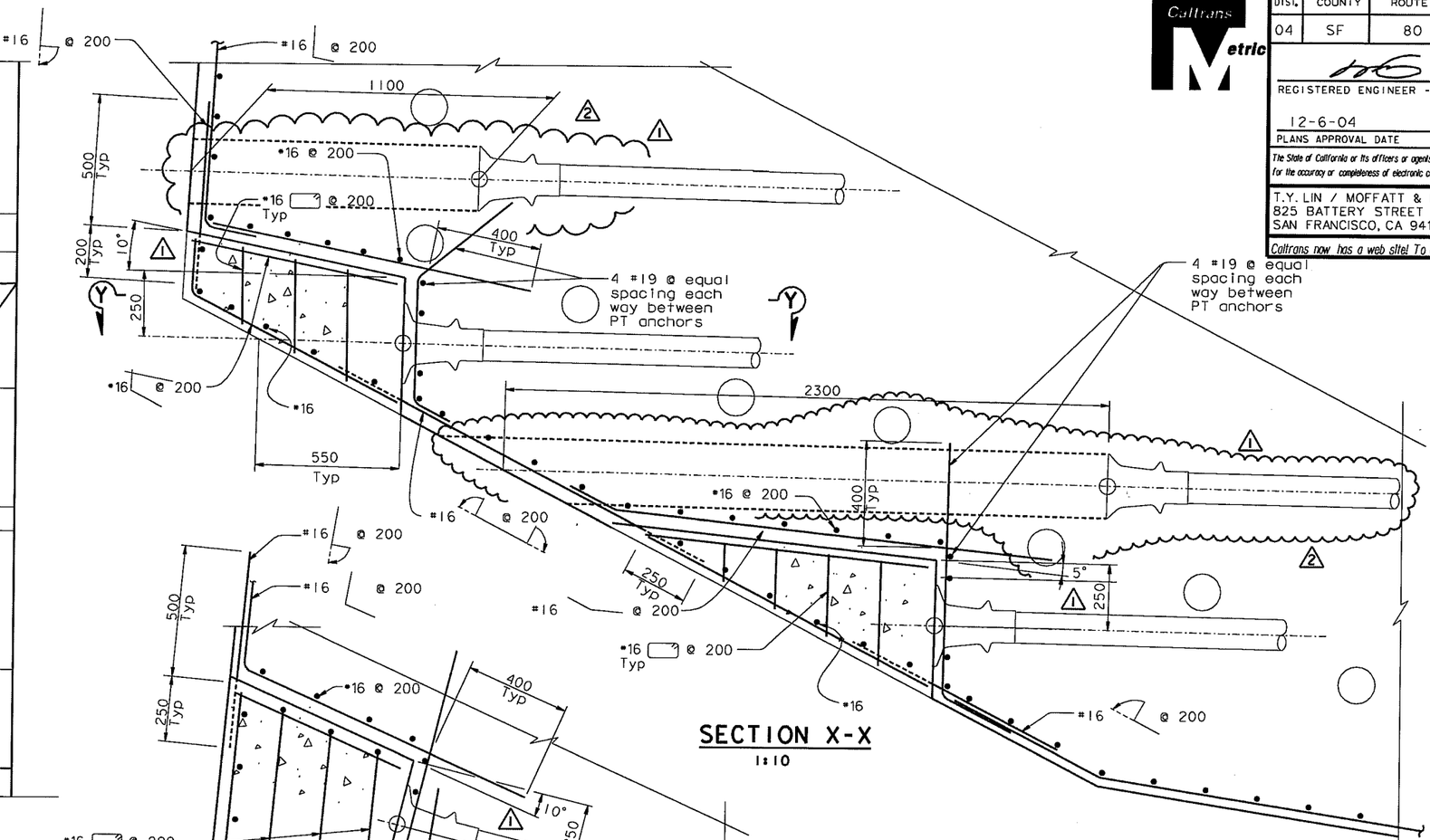

SECTION X-X
1:10

SECTION Y-Y
1:10

NOTES:

1. For additional details, see "W2 Cap Beam Blockout Details No.2" sheet.
2. Cap beam reinforcement not shown for clarity.
3. Local confining spiral reinforcement per tendon anchors shall be provided by PT tendon hardware supplier.

Caltrans Metric

DIST.	COUNTY	ROUTE	KILOMETER POST TOTAL PROJECT	SHEET NO.	TOTAL SHEETS
04	SF	80	13.2/13.9	507R2	1204

REGISTERED ENGINEER - CIVIL

REGISTERED PROFESSIONAL ENGINEER — John Sun — No. C 54648 — Exp. 12/31/05 — CIVIL — STATE OF CALIFORNIA

12-6-04
PLANS APPROVAL DATE

The State of California or its officers or agents shall not be responsible for the accuracy or completeness of electronic copies of this plan sheet.

T.Y. LIN / MOFFATT & NICHOL
825 BATTERY STREET
SAN FRANCISCO, CA 94111

Caltrans now has a web site! To get to the web site, go to: http://www.dot.ca.gov

REGISTERED PROFESSIONAL ENGINEER — Jagdev P. Duxbury — No. C 64677 — Exp. 06/30/07 — CIVIL — STATE OF CALIFORNIA

FOR REVISIONS ONLY

MARK	DATE	DESCRIPTIONS	BY	CH'D	CCO#
		REVISIONS			
2	01/31/07	CORROSION PROTECTION	JD	AS	16
1	07/21/06	W2 CAP BEAM ISD	JD	NV	23

CONTRACT CHANGE ORDER NO. 16
SHEET 10 OF 12

ALL DIMENSIONS ARE IN MILLIMETERS UNLESS OTHERWISE SHOWN

R. Valizadeh/V. Toan/Y.L./W.L./F.C.
DESIGN OVERSIGHT
SIGN OFF DATE 01/31/07

	BY	CHECKED
DESIGN	J. Sun	M. Chen
DETAILS	J. Duxbury	M. Chen
QUANTITIES	S. Shi	D. Harrison

PREPARED FOR THE STATE OF CALIFORNIA
DEPARTMENT OF TRANSPORTATION

R. Manzanarez
PROJECT ENGINEER

BRIDGE NO. 34-0006L/R
KILOMETER POST 13.2/13.9

CU 04
EA 0120F1

SAN FRANCISCO OAKLAND BAY BRIDGE
EAST SPAN SEISMIC SAFETY PROJECT
SELF-ANCHORED SUSPENSION BRIDGE
(SUPERSTRUCTURE & TOWER)

W2 CAP BEAM BLOCKOUT DETAILS NO. 10

DISREGARD PRINTS BEARING EARLIER REVISION DATES →
REVISION DATES (PRELIMINARY STAGE ONLY): 05/17/01 | 04/30/02 | 07/31/02 | 12/19/02
SHEET 90R2 OF

Rev. Date: 5-18-98

ORIGINAL SCALE IN MILLIMETERS FOR REDUCED PLANS 0 10 20 30 40 50 60 70 80 90 100

FILE => I:\bb\04-0120F1\sas\contract plans and cco\cco\in progress\cco#16\aecbb10.dgn

DATE PLOTTED => 15 MAR 2007 TIME PLOTTED => 15:34:45
100 % PS&E
USERNAME => jutsifor

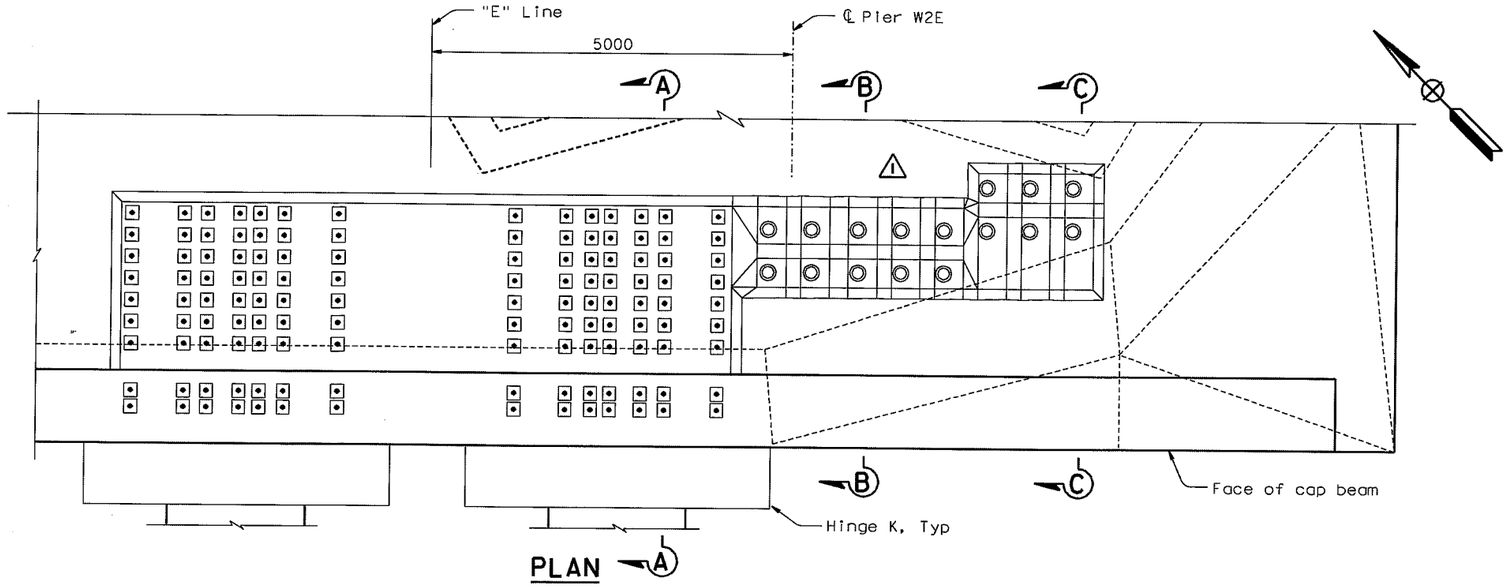

PLAN
1:40

(36 Dia post-tension rod and 12-15 Dia strand tendon blockouts)

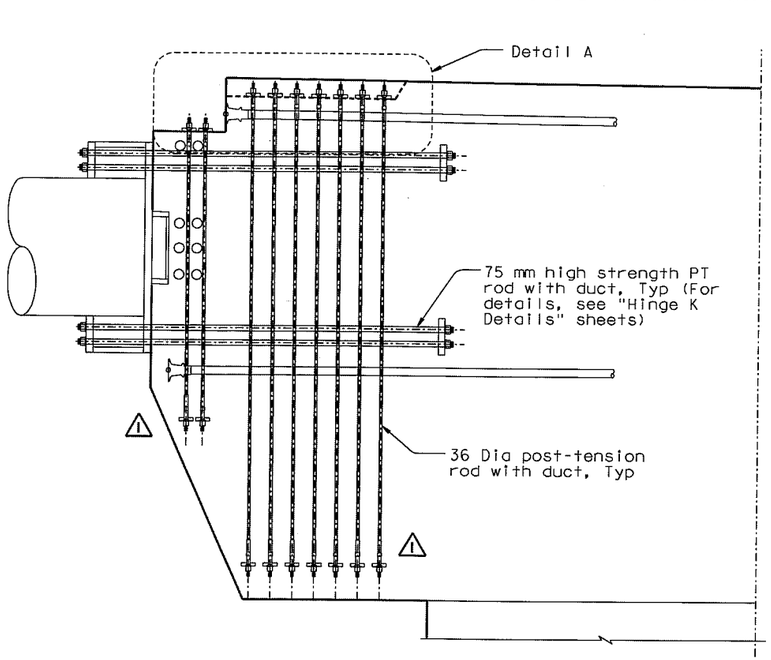

SECTION A-A
1:40

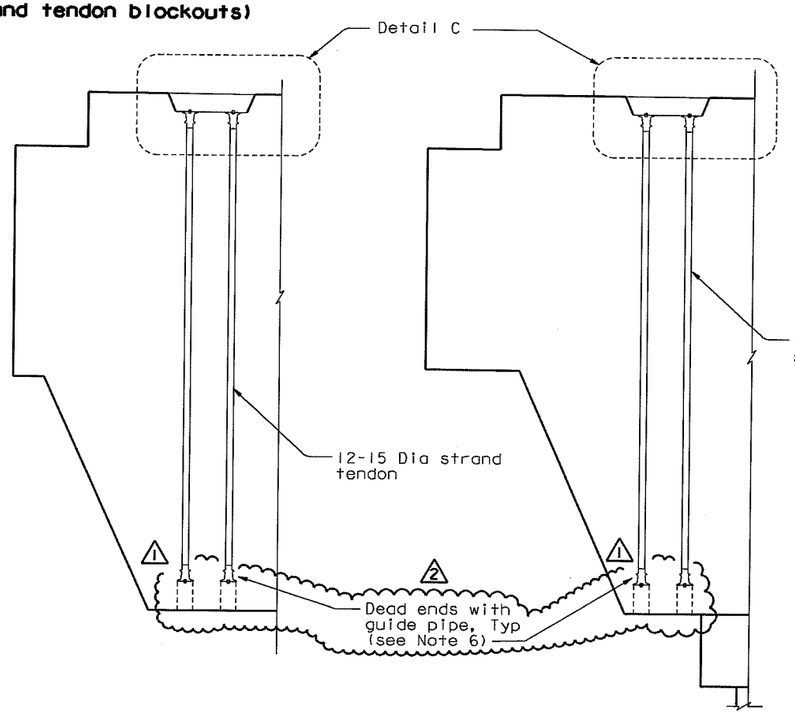

SECTION B-B
1:40

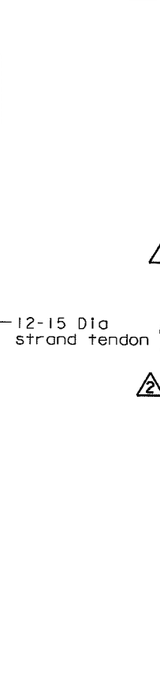

SECTION C-C
1:40

ALL DIMENSIONS ARE IN MILLIMETERS UNLESS OTHERWISE SHOWN

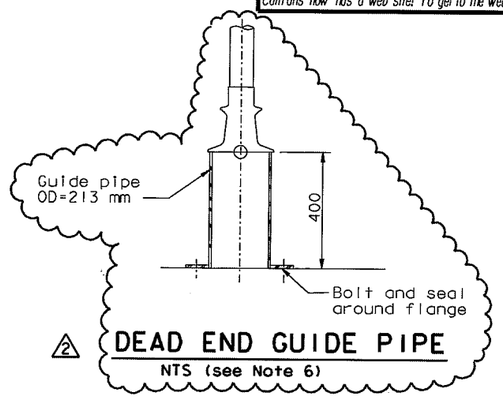

2 DEAD END GUIDE PIPE
NTS (see Note 6)

NOTES:

1. Cap beam reinforcement not shown for clarity.
2. Local confining spiral reinforcement for tendon anchors shall be provided by PT tendon hardware supplier.
3. Blockouts on the cap beam "E" Line shown, blockouts on the cap beam "W" Line similar.
4. 1 For Details A and C, see "W2 Cap Beam Blockout Details No. 12" sheet.
5. For additional prestressing details, see "Prestressing Notes" sheet.
6. 2 Contractor shall coordinate the dead end guide pipe details with the PT Supplier and shall submit them to the Engineer for review and approval. Contractor shall grout the guide pipe after stressing operations have been completed.

DIST.	COUNTY	ROUTE	KILOMETER POST TOTAL PROJECT	SHEET NO.	TOTAL SHEETS
04	SF	80	13.2/13.9	508R2	1204

REGISTERED ENGINEER - CIVIL

12-6-04
PLANS APPROVAL DATE

REGISTERED PROFESSIONAL ENGINEER — John Sun — No. C 54648 — Exp. 12/31/05 — CIVIL — STATE OF CALIFORNIA

The State of California or its officers or agents shall not be responsible for the accuracy or completeness of electronic copies of this plan sheet.

T.Y. LIN / MOFFATT & NICHOL
825 BATTERY STREET
SAN FRANCISCO, CA 94111

Caltrans now has a web site! To get to the web site, go to: http://www.dot.ca.gov

REGISTERED PROFESSIONAL ENGINEER — James R Duxbury — No. C 64677 — Exp. 06/30/07 — CIVIL — STATE OF CALIFORNIA

FOR REVISIONS ONLY

MARK	DATE	REVISIONS	BY	CH'D	CCO#
2	01/31/07	CORROSION PROTECTION	JD	AS	16
1	07/21/06	W2 CAP BEAM ISD	JD	NV	23

CONTRACT CHANGE ORDER NO. 16
SHEET 11 OF 12

100 % PS&E

SAN FRANCISCO OAKLAND BAY BRIDGE
EAST SPAN SEISMIC SAFETY PROJECT
SELF-ANCHORED SUSPENSION BRIDGE
(SUPERSTRUCTURE & TOWER)

W2 CAP BEAM BLOCKOUT DETAILS NO. 11

R. Valizadeh/V. Toan/Y. L./W. L./F. C.
DESIGN OVERSIGHT
SIGN OFF DATE 01/31/07

	BY	CHECKED
DESIGN	J. Sun	M. Chen
DETAILS	J. Duxbury	M. Chen
QUANTITIES	S. Shi	D. Harrison

PREPARED FOR THE STATE OF CALIFORNIA
DEPARTMENT OF TRANSPORTATION

R. Manzanarez
PROJECT ENGINEER

BRIDGE NO. 34-0006L/R
KILOMETER POST 13.2/13.9

CU 04
EA 0120F1

DISREGARD PRINTS BEARING EARLIER REVISION DATES

REVISION DATES (PRELIMINARY STAGE ONLY): 05/31/01 | 04/08/02 | 07/01/02 | 12/19/02

SHEET 91R2 OF

Rev. Date: 5-18-98

ORIGINAL SCALE IN MILLIMETERS FOR REDUCED PLANS 0 10 20 30 40 50 60 70 80 90 100

FILE => I:\bb\04-012001\sas\contract plans and cco\cco\In progress\cco#16\aecbb11.dgn

USERNAME => visitor DATE PLOTTED => 15 MAR 2007 TIME PLOTTED => 15:35:58

DIST.	COUNTY	ROUTE	KILOMETER POST TOTAL PROJECT	SHEET NO.	TOTAL SHEETS
04	SF	80	13.2/13.9	509R2	1204

Caltrans Metric

REGISTERED ENGINEER - CIVIL

12-6-04

PLANS APPROVAL DATE

The State of California or its officers or agents shall not be responsible for the accuracy or completeness of electronic copies of this plan sheet.

REGISTERED PROFESSIONAL ENGINEER John Sun No. C 54648 Exp. 12/31/05 CIVIL STATE OF CALIFORNIA

T.Y. LIN / MOFFATT & NICHOL
825 BATTERY STREET
SAN FRANCISCO, CA 94111

Caltrans now has a web site! To get to the web site, go to: http://www.dot.ca.gov

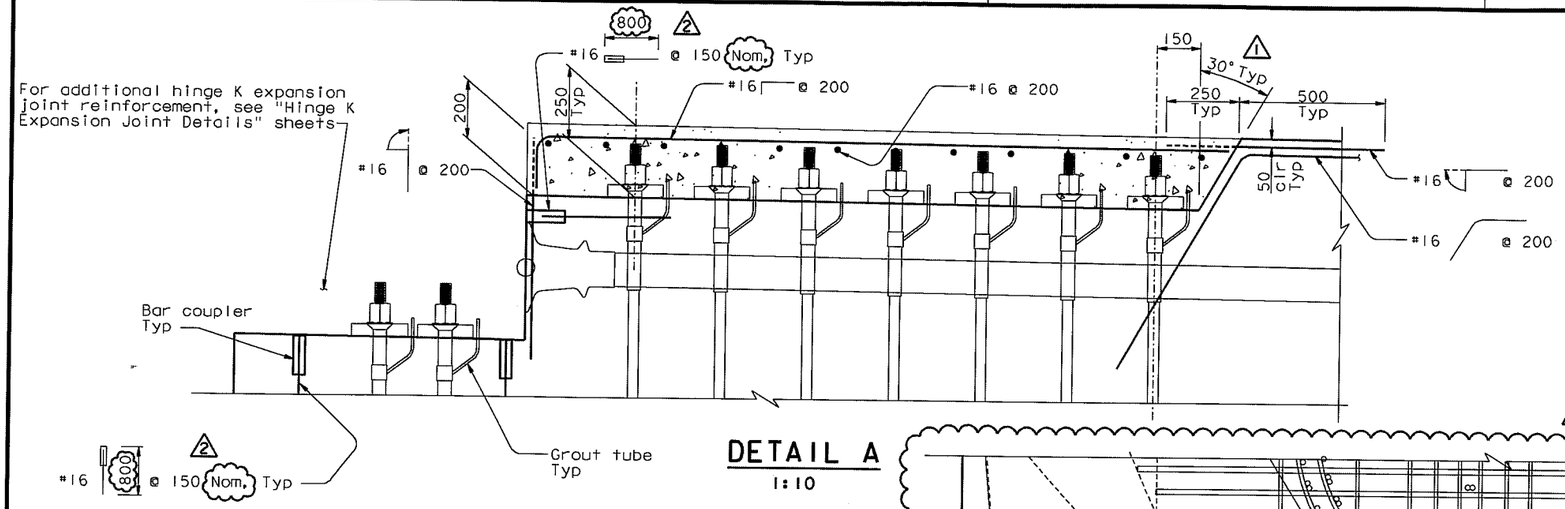

DETAIL A
1:10

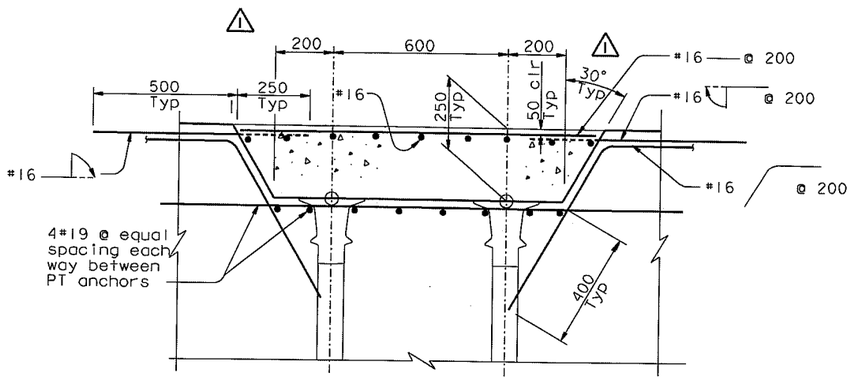

DETAIL C
1:10

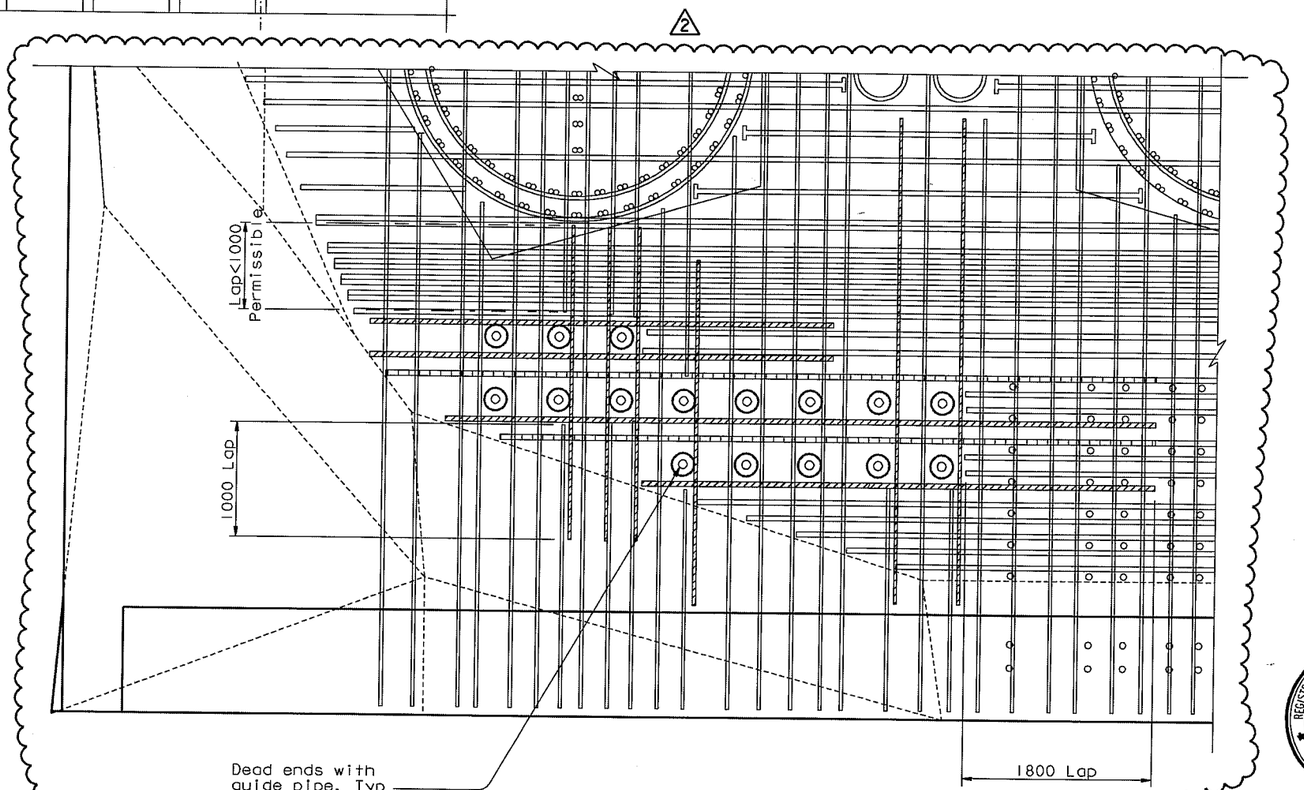

DEAD END GUIDE PIPE BOTTOM
MAT REINFORCEMENT ALTERNATE
NTS

NOTES:

1. For additional details, see "W2 Cap Beam Blockout Details No. 11" sheet.
2. Cap beam reinforcement not shown for clarity.
3. Local confining spiral reinforcement per tendon anchors shall be provided by PT tendon hardware supplier.

REGISTERED PROFESSIONAL ENGINEER Jaimes P. Duxbury No. C 64677 Exp. 06/30/07 CIVIL STATE OF CALIFORNIA

FOR REVISIONS ONLY

MARK	DATE	DESCRIPTIONS	BY	CH'D	CCO#
2	01/31/07	CORROSION PROTECTION	JD	AS	16
1	07/21/06	W2 CAP BEAM ISD	JD	NV	23

REVISIONS

CONTRACT CHANGE ORDER NO. 16
SHEET 12 OF 12

ALL DIMENSIONS ARE IN MILLIMETERS UNLESS OTHERWISE SHOWN

R. Valizadeh/V. Toan/Y.L./W.L./F.C.
DESIGN OVERSIGHT
Roza Valizadeh / Vong Toan / Y Liu
SIGN OFF DATE 01/31/07
Rev. Date: 5-18-98

	BY	CHECKED
DESIGN	J. Sun	M. Chen
DETAILS	J. Duxbury	M. Chen
QUANTITIES	S. Shi	D. Harrison

PREPARED FOR THE STATE OF CALIFORNIA DEPARTMENT OF TRANSPORTATION

R. Manzanarez
PROJECT ENGINEER

BRIDGE NO. 34-0006L/R
KILOMETER POST 13.2/13.9

SAN FRANCISCO OAKLAND BAY BRIDGE
EAST SPAN SEISMIC SAFETY PROJECT
SELF-ANCHORED SUSPENSION BRIDGE
(SUPERSTRUCTURE & TOWER)

W2 CAP BEAM BLOCKOUT DETAILS NO. 12

ORIGINAL SCALE IN MILLIMETERS FOR REDUCED PLANS 0 10 20 30 40 50 60 70 80 90 100

CU 04
EA 0120F1

DISREGARD PRINTS BEARING EARLIER REVISION DATES

REVISION DATES (PRELIMINARY STAGE ONLY) 05/31/01 04/08/02 07/08/02 12/19/02

SHEET 92R2 OF

FILE => I:\bb\04-012001\sas\contract plans and cco\cco\in progress\cco#16\aecbb12.dgn

USERNAME => visitor DATE PLOTTED => 15 MAR 2007 TIME PLOTTED => 15:37:14

100 % PS&E