DIST.	COUNTY	ROUTE	KILOMETER POST TOTAL PROJECT	SHEET NO.	TOTAL SHEETS
04	SF	80	13.2/13.9	460R2	1204

Caltrans Metric

REGISTERED ENGINEER - CIVIL

12-6-04
PLANS APPROVAL DATE

REGISTERED PROFESSIONAL ENGINEER John Sun No. C 54648 Exp. 12/31/05 CIVIL STATE OF CALIFORNIA

The State of California or its officers or agents shall not be responsible for the accuracy or completeness of electronic copies of this plan sheet.

T.Y. LIN / MOFFATT & NICHOL
825 BATTERY STREET
SAN FRANCISCO, CA 94111

Caltrans now has a web site! To get to the web site, go to: http://www.dot.ca.gov

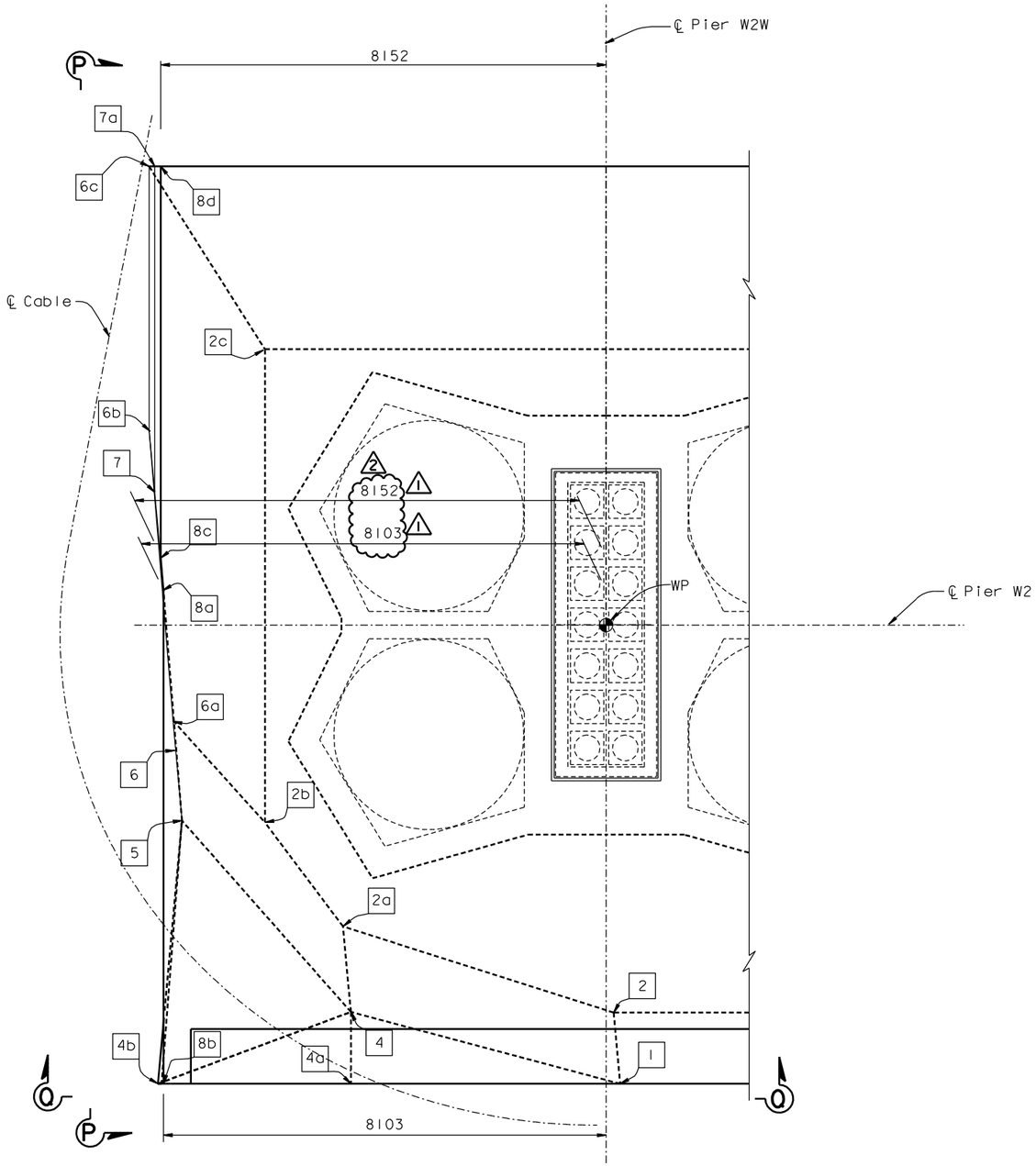

DETAIL B (PARTIAL PLAN)

1:50

REGISTERED PROFESSIONAL ENGINEER James P. Duxbury No. C 64677 Exp. 06/30/07 CIVIL STATE OF CALIFORNIA

FOR REVISIONS ONLY

MARK	DATE	DESCRIPTIONS	BY	CH'D	CCO#
2	01/31/07	WEST DEVIATION SADDLE GEOMETRY	NV	JD	15
1	07/21/06	W2 CAP BEAM ISD	JD	NV	23

REVISIONS

CONTRACT CHANGE ORDER NO. _____
SHEET ___ OF ___

LEGEND:

[-] Indicates Cap Beam Dimensions Control Point

NOTES:

1. For additional details, see "W2 Cap Beam Dimension Details No.1" sheet.
2. For Sections P-P and Q-Q, see "W2 Cap Beam Dimension Details No.8" sheet.

100 % PS&E

ALL DIMENSIONS ARE IN MILLIMETERS UNLESS OTHERWISE SHOWN

SAN FRANCISCO OAKLAND BAY BRIDGE
EAST SPAN SEISMIC SAFETY PROJECT
SELF-ANCHORED SUSPENSION BRIDGE
(SUPERSTRUCTURE & TOWER)

W2 CAP BEAM DIMENSION DETAILS NO. 7

R. Valizadeh/V. Toan/Y.L./W.L./F.C.
DESIGN OVERSIGHT
SIGN OFF DATE 01/31/07

	BY	CHECKED
DESIGN	J. Sun	M. Chen
DETAILS	S. Shi	M. Chen
QUANTITIES	S. Shi	D. Harrison

PREPARED FOR THE STATE OF CALIFORNIA DEPARTMENT OF TRANSPORTATION

R. Manzanarez
PROJECT ENGINEER

BRIDGE NO. 34-0006L/R
KILOMETER POST 13.2/13.9

Rev. Date: 5-18-98

ORIGINAL SCALE IN MILLIMETERS FOR REDUCED PLANS 0 10 20 30 40 50 60 70 80 90 100

CU 04
EA 0120F1

DISREGARD PRINTS BEARING EARLIER REVISION DATES

REVISION DATES (PRELIMINARY STAGE ONLY): 05/15/99 08/02/99 05/31/01 04/08/02 07/01/02 12/19/02

SHEET 043R2 OF

FILE => I:\bb\04-0120I\sas\contract plans and cco\cco\in progress\cco#15\aecap06.dgn

USERNAME => vignatovsky DATE PLOTTED => 15 MAR 2007 TIME PLOTTED => 14:59:05

Caltrans now has a web site! To get to the web site, go to: http://www.dot.ca.gov

Caltrans Metric

DIST.	COUNTY	ROUTE	KILOMETER POST TOTAL PROJECT	SHEET NO.	TOTAL SHEETS
04	SF	80	13.2/13.9	459R2	1204

REGISTERED ENGINEER - CIVIL

12-6-04
PLANS APPROVAL DATE

REGISTERED PROFESSIONAL ENGINEER John Sun No. C 54648 Exp. 12/31/05 CIVIL STATE OF CALIFORNIA

The State of California or its officers or agents shall not be responsible for the accuracy or completeness of electronic copies of this plan sheet.

T.Y. LIN / MOFFATT & NICHOL
825 BATTERY STREET
SAN FRANCISCO, CA 94111

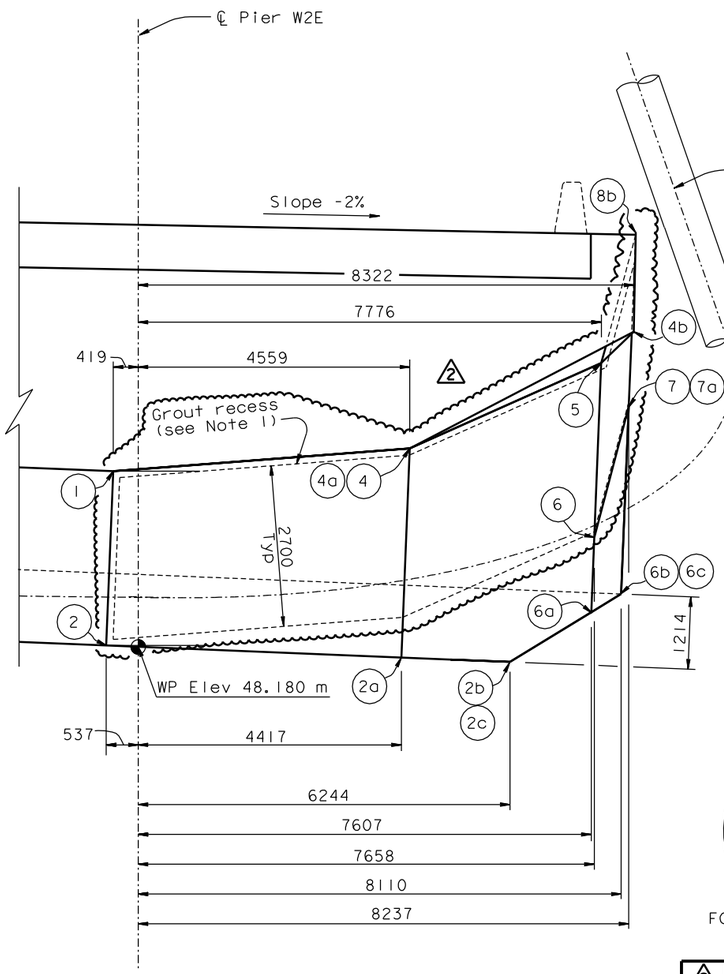

SECTION M-M

1:50

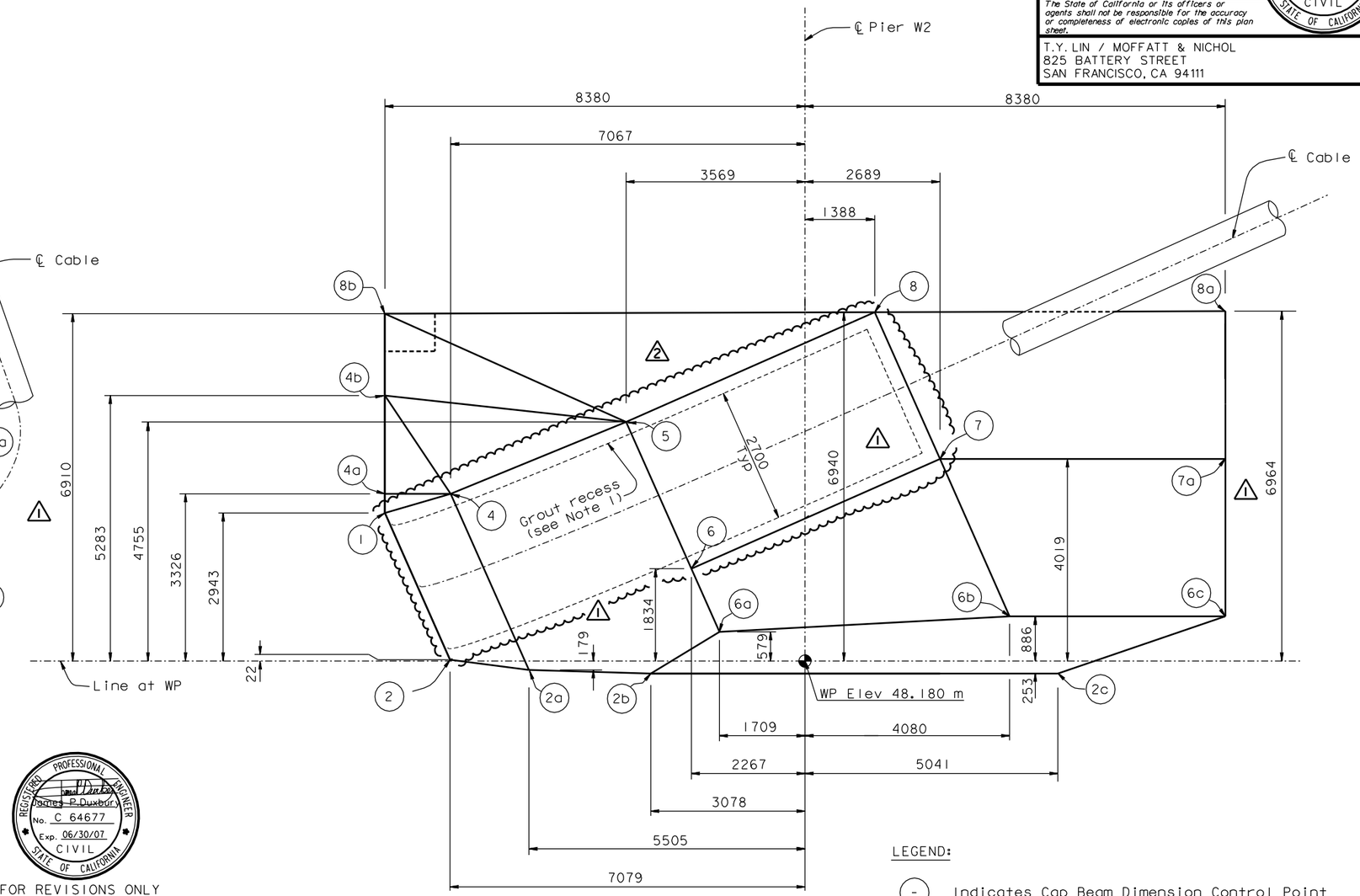

SECTION N-N

1:50

LEGEND:

(-) Indicates Cap Beam Dimension Control Point

NOTES:

2. 1. West deviation saddle grout recess (depth = 50 mm) shall be parallel to concrete faces of cap beam. For details see "West Deviation Saddle Details No. 1" and "West Deviation Saddle Details No. 2" sheets.

REGISTERED PROFESSIONAL ENGINEER James P. Duxbury No. C 64677 Exp. 06/30/07 CIVIL STATE OF CALIFORNIA

FOR REVISIONS ONLY

MARK	DATE	DESCRIPTIONS	BY	CH'D	CCO#
2	01/31/07	WEST DEVIATION SADDLE GEOMETRY	AS	JD	15
1	07/21/06	W2 CAP BEAM ISD	JD	NV	23

REVISIONS

CONTRACT CHANGE ORDER NO. _____
SHEET ____ OF ____

ALL DIMENSIONS ARE IN MILLIMETERS UNLESS OTHERWISE SHOWN

SAN FRANCISCO OAKLAND BAY BRIDGE
EAST SPAN SEISMIC SAFETY PROJECT
SELF-ANCHORED SUSPENSION BRIDGE
(SUPERSTRUCTURE & TOWER)

W2 CAP BEAM DIMENSION DETAILS NO. 6

R. Valizadeh/V. Toan/Y.L./W.L./F.C.
DESIGN OVERSIGHT
SIGN OFF DATE 01/31/07

	BY	CHECKED
DESIGN	J. Sun	M. Chen
DETAILS	S. Shi	M. Chen
QUANTITIES	S. Shi	D. Harrison

PREPARED FOR THE STATE OF CALIFORNIA DEPARTMENT OF TRANSPORTATION

R. Manzanarez
PROJECT ENGINEER

BRIDGE NO. 34-0006L/R
KILOMETER POST 13.2/13.9

CU 04
EA 0120F1

Rev. Date: 5-18-98

ORIGINAL SCALE IN MILLIMETERS FOR REDUCED PLANS 0 10 20 30 40 50 60 70 80 90 100

DISREGARD PRINTS BEARING EARLIER REVISION DATES

REVISION DATES (PRELIMINARY STAGE ONLY): 05/15/99 08/07/99 05/31/01 04/08/02 07/09/02 12/19/02

SHEET 042R2 OF

FILE => I:\bb\04-0120I\sas\contract plans and cco\cco\in progress\cco#15\aecap05.dgn

USERNAME => vignatovs DATE PLOTTED => 15 MAR 2007 TIME PLOTTED => 14:56:33

100% PS&E

DIST.	COUNTY	ROUTE	KILOMETER POST TOTAL PROJECT	SHEET NO.	TOTAL SHEETS
04	SF	80	13.2/13.9	461R2	1204

Caltrans Metric

REGISTERED ENGINEER - CIVIL

12-6-04
PLANS APPROVAL DATE

REGISTERED PROFESSIONAL ENGINEER John Sun No. C 54648 Exp. 12/31/05 CIVIL STATE OF CALIFORNIA

The State of California or its officers or agents shall not be responsible for the accuracy or completeness of electronic copies of this plan sheet.

T.Y. LIN / MOFFATT & NICHOL
825 BATTERY STREET
SAN FRANCISCO, CA 94111

Caltrans now has a web site! To get to the web site, go to: http://www.dot.ca.gov

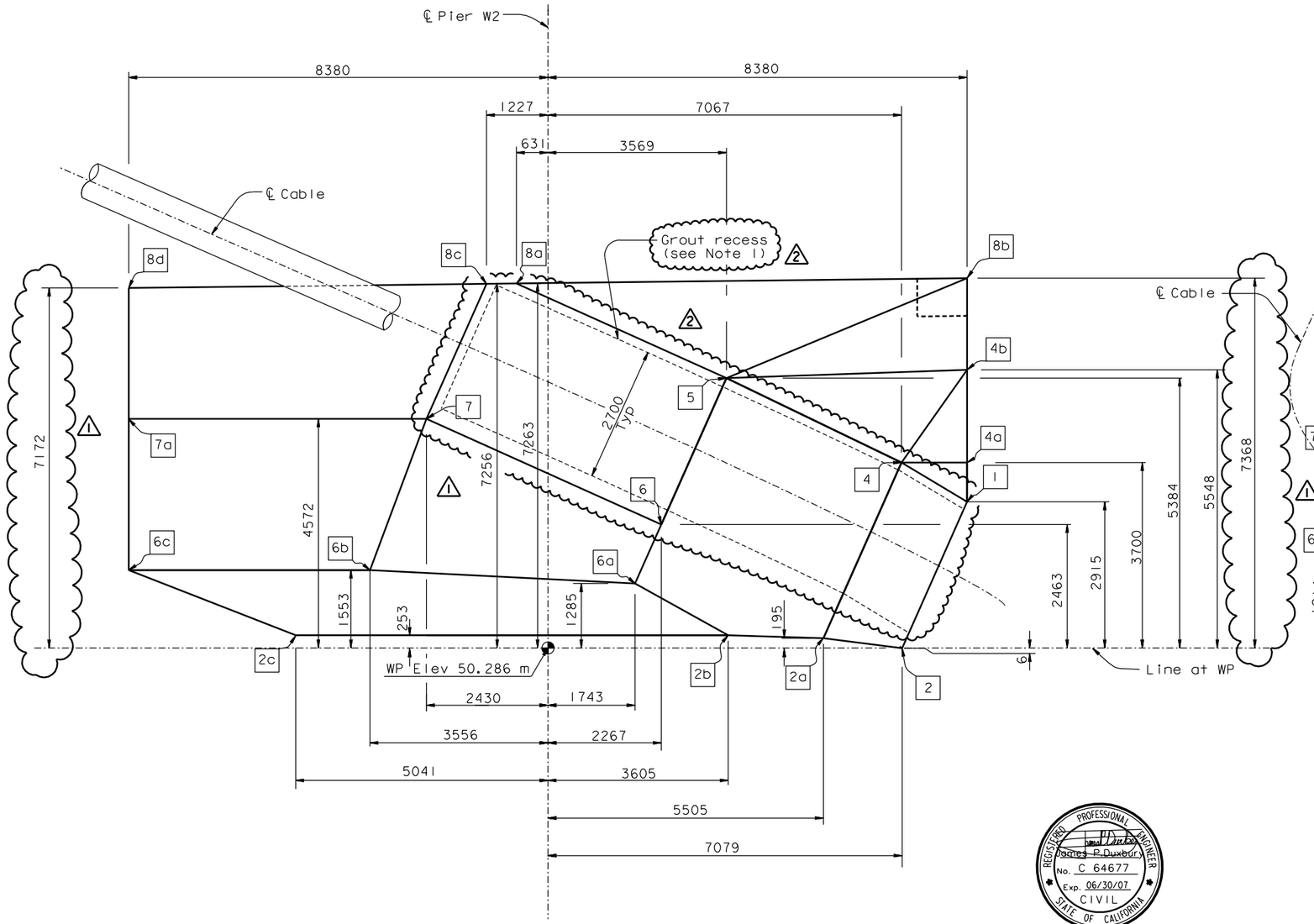

SECTION P-P
1:50

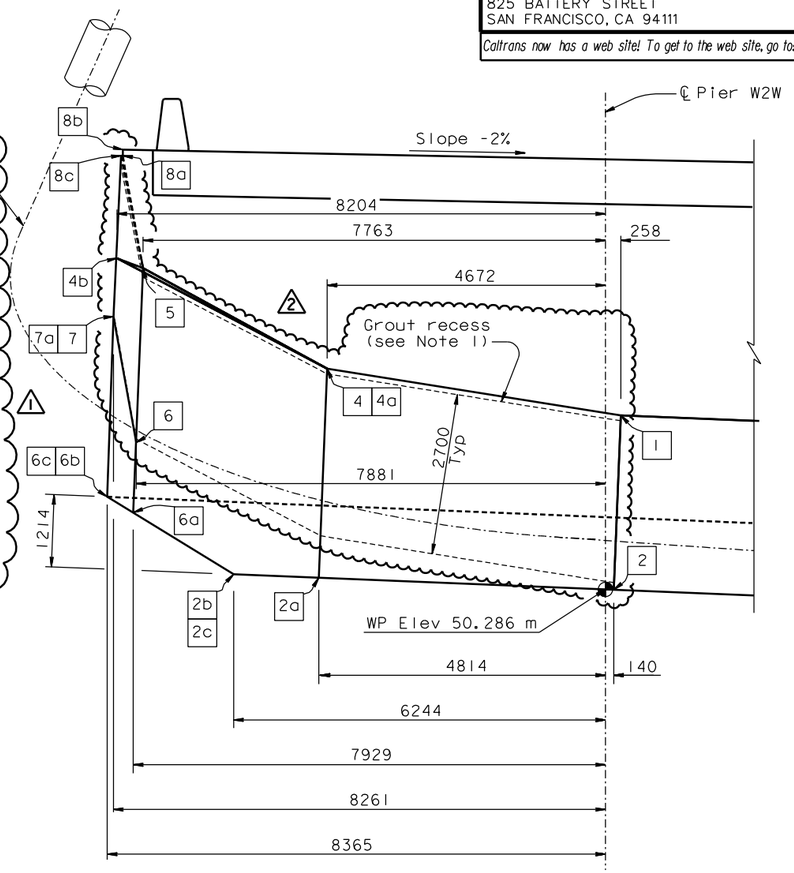

SECTION Q-Q
1:50

FOR REVISIONS ONLY

REGISTERED PROFESSIONAL ENGINEER James P. Duxbury No. C 64677 Exp. 06/30/07 CIVIL STATE OF CALIFORNIA

LEGEND:

[-] Indicates Cap Beam Dimensions Control Point

NOTES:

2. West deviation saddle grout recess (depth = 50 mm) shall be parallel to concrete faces of cap beam. For details see "West Deviation Saddle Details No. 1" and "West Deviation Saddle Details No. 2" sheets.

MARK	DATE	DESCRIPTIONS	BY	CH'D	CCO#
2	01/31/07	WEST DEVIATION SADDLE GEOMETRY	JD	NV	15
1	07/21/06	W2 CAP BEAM ISD	JD	NV	23

REVISIONS

CONTRACT CHANGE ORDER NO. _____
SHEET ____ OF ____

ALL DIMENSIONS ARE IN MILLIMETERS UNLESS OTHERWISE SHOWN

R. Valizadeh/V. Toan/Y.L./W.L./F.C.
DESIGN OVERSIGHT
Roya Valizadeh / Vong Toan / Y. Lui
SIGN OFF DATE 01/31/07

	BY	CHECKED
DESIGN	J. Sun	M. Chen
DETAILS	S. Shi	M. Chen
QUANTITIES	S. Shi	D. Harrison

PREPARED FOR THE STATE OF CALIFORNIA DEPARTMENT OF TRANSPORTATION

R. Manzanarez
PROJECT ENGINEER

BRIDGE NO. 34-0006L/R
KILOMETER POST 13.2/13.9

SAN FRANCISCO OAKLAND BAY BRIDGE
EAST SPAN SEISMIC SAFETY PROJECT
SELF-ANCHORED SUSPENSION BRIDGE
(SUPERSTRUCTURE & TOWER)

W2 CAP BEAM DIMENSION DETAILS NO. 8

Rev. Date: 5-18-98

ORIGINAL SCALE IN MILLIMETERS FOR REDUCED PLANS 0 10 20 30 40 50 60 70 80 90 100

CU 04
EA 0120F1

DISREGARD PRINTS BEARING EARLIER REVISION DATES

REVISION DATES (PRELIMINARY STAGE ONLY): 05/15/99 08/02/99 05/31/01 04/08/02 07/01/02 12/19/02

SHEET 044R2 OF

FILE => I:\bb\04-012001\sas\contract plans and cco\cco\in progress\cco#15\aecap07.dgn

USERNAME => vignatovsKDATE PLOTTED => 15 MAR 2007 TIME PLOTTED => 15:01:22

100% PS&E

MARK	DATE	DESCRIPTIONS	BY	CH'D	CCO#
2	01/31/07	HINGE K PIPE BEAM BLOCKOUTS	JD	NV	15
1	07/21/06	W2 CAP BEAM ISD	JD	NV	23

REVISIONS

CONTRACT CHANGE ORDER NO. ____
SHEET ___ OF ___

Caltrans Metric

DIST.	COUNTY	ROUTE	KILOMETER POST TOTAL PROJECT	SHEET NO.	TOTAL SHEETS
04	SF	80	13.2/13.9	471R2	1204

REGISTERED ENGINEER - CIVIL
12-6-04
PLANS APPROVAL DATE

REGISTERED PROFESSIONAL ENGINEER John Sun No. C 54648 Exp. 12/31/05 CIVIL STATE OF CALIFORNIA

The State of California or its officers or agents shall not be responsible for the accuracy or completeness of electronic copies of this plan sheet.

T.Y. LIN / MOFFATT & NICHOL
825 BATTERY STREET
SAN FRANCISCO, CA 94111

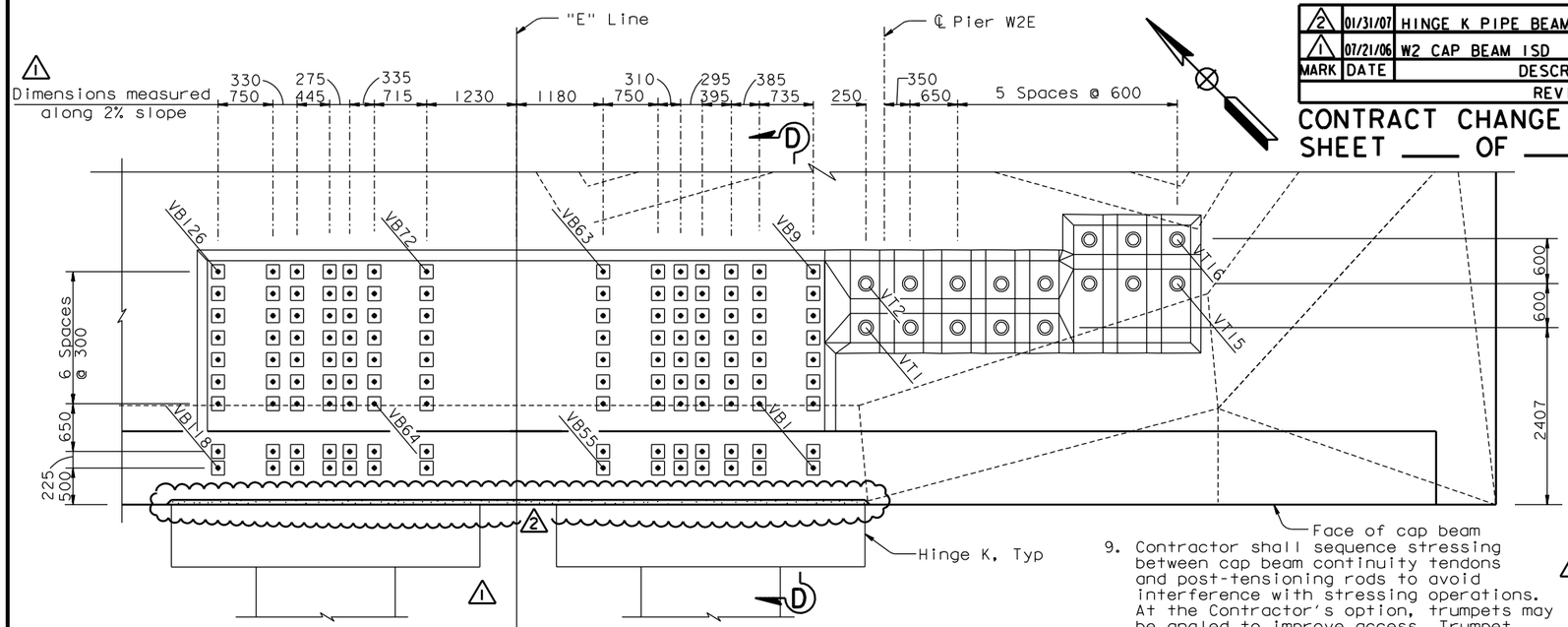

PLAN-VERTICAL STRAND TENDON AND POST-TENSION ROD ARRANGEMENT
DETAIL A
1:40

9. Contractor shall sequence stressing between cap beam continuity tendons and post-tensioning rods to avoid interference with stressing operations. At the Contractor's option, trumpets may be angled to improve access. Trumpet layout and corresponding additional reinforcement shall be submitted to the Engineer for review and approval.

3 10. Blockouts at the dead end are not required. At the Contractor's option, blockouts can be provided, subject to the Engineers review and approval of the blockout and reinforcement details.

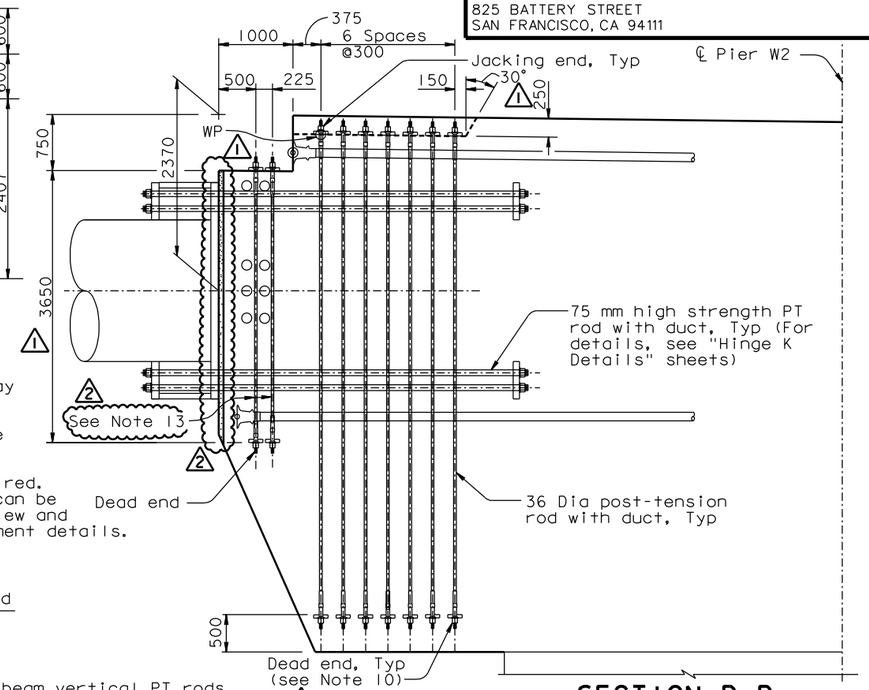

SECTION D-D
1:20 (see Note 9)

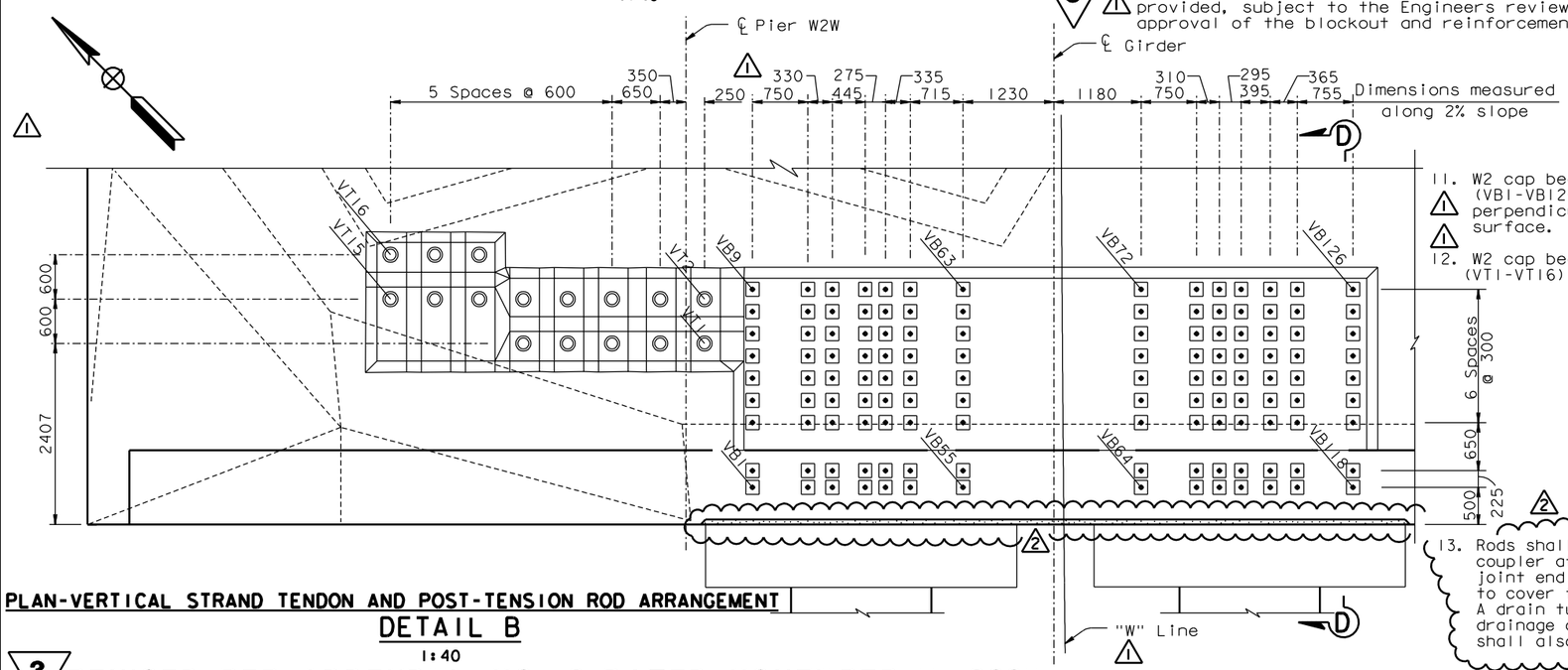

PLAN-VERTICAL STRAND TENDON AND POST-TENSION ROD ARRANGEMENT
DETAIL B
1:40

11. W2 cap beam vertical PT rods (VB1-VB126) shall be placed perpendicular to the top concrete surface.

12. W2 cap beam vertical tendons (VT1-VT16) shall be placed vertical.

13. Rods shall be supplied with a coupler at or near the expansion joint end with a plug large enough to cover the duct and coupler. A drain tube at the lower end for drainage outside the W2 Cap Beam shall also be provided.

REGISTERED PROFESSIONAL ENGINEER James P. Duxbury No. C 64677 Exp. 06/30/07 CIVIL STATE OF CALIFORNIA

FOR REVISIONS ONLY

ALL DIMENSIONS ARE IN MILLIMETERS UNLESS OTHERWISE SHOWN

NOTES:

1. For additional details, see "W2 Cap Beam Post-Tensioning Details No.5" and "W2 Cap Beam Post-Tensioning Details No.7" sheets.
2. Jacking force in the W2 cap beam vertical tendons (VT1-VT16) shall be 2350 kN typical.
3. Jacking force in the W2 cap beam vertical PT rods (VB1-VB126) shall be 734 kN typical.
4. For hinge K details, see "Hinge K Details" sheets.
5. W2 cap beam vertical PT rods are ASTM A722 high strength 36 Dia rods (fu=1030 MPa), with standard galvanized steel ducts, unless specified otherwise.
6. W2 cap beam vertical tendons are ASTM A416 Grade 270 (fu=1860 MPa), low relaxation, 12-15 Dia seven wire strand PT, unless specified otherwise.
7. For additional prestressing details, see "Prestressing Notes" sheet.
8. For general stressing sequence, see "Pier W2 Construction Sequence" sheet.

3 REVISED PER ADDENDUM NO. 3 DATED NOVEMBER 7, 2005

R. Valizadeh/V. Toan/Y.L./W.L./F.C.
DESIGN OVERSIGHT
Roya Valizadeh / Vong Toan / Y. Lu
SIGN OFF DATE 01/31/07

Rev. Date: 5-18-98

	BY	CHECKED
DESIGN	J. Sun	M. Chen
DETAILS	J. Duxbury	M. Chen
QUANTITIES	S. Shi	D. Harrison

PREPARED FOR THE STATE OF CALIFORNIA DEPARTMENT OF TRANSPORTATION

R. Manzanarez
PROJECT ENGINEER

BRIDGE NO. 34-0006L/R
KILOMETER POST 13.2/13.9

SAN FRANCISCO OAKLAND BAY BRIDGE
EAST SPAN SEISMIC SAFETY PROJECT
SELF-ANCHORED SUSPENSION BRIDGE (SUPERSTRUCTURE & TOWER)
W2 CAP BEAM POST-TENSIONING DETAILS NO. 10

ORIGINAL SCALE IN MILLIMETERS FOR REDUCED PLANS 0 10 20 30 40 50 60 70 80 90 100

CU 04
EA 0120F1

DISREGARD PRINTS BEARING EARLIER REVISION DATES

REVISION DATES (PRELIMINARY STAGE ONLY): 08/02/99 05/31/01 04/08/02 07/01/02 12/19/02 10/13/05

SHEET 054R2 OF

FILE => I:\bb\04-012001\sas\contract plans and cco\cco\in progress\cco#15\aecpt10.dgn

USERNAME => vignotovsk DATE PLOTTED => 15 MAR 2007 TIME PLOTTED => 15:29:22

100 % PS&E

Caltrans now has a web site! To get to the web site, go to: http://www.dot.ca.gov

DIST.	COUNTY	ROUTE	KILOMETER POST TOTAL PROJECT	SHEET No.	TOTAL SHEETS
04	SF	80	13.2/13.9	497S25R1	1204

REGISTERED ENGINEER - CIVIL

12-6-04
PLANS APPROVAL DATE

REGISTERED PROFESSIONAL ENGINEER John Sun No. C 54648 Exp. 12/31/05 CIVIL STATE OF CALIFORNIA

The State of California or its officers or agents shall not be responsible for the accuracy or completeness of electronic copies of this plan sheet.

T.Y. LIN / MOFFATT & NICHOL
825 BATTERY STREET
SAN FRANCISCO, CA 94111

Caltrans Metric

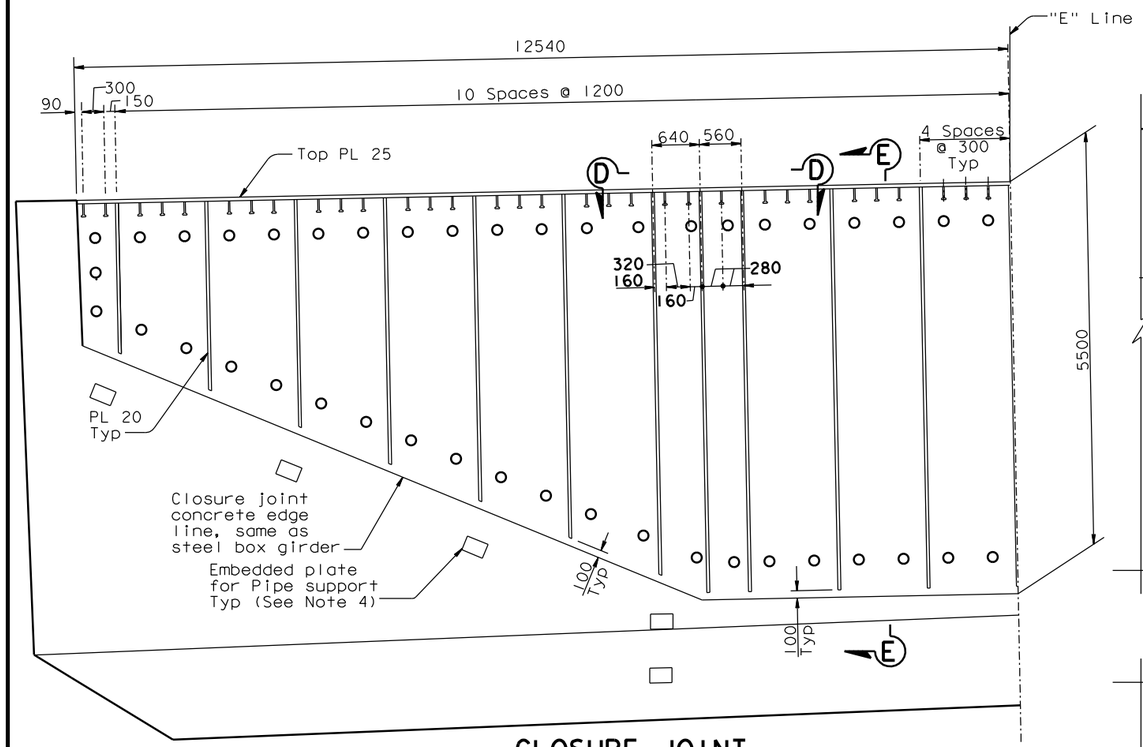

CLOSURE JOINT

(Closure joint reinforcement not shown for clarity)

1:40

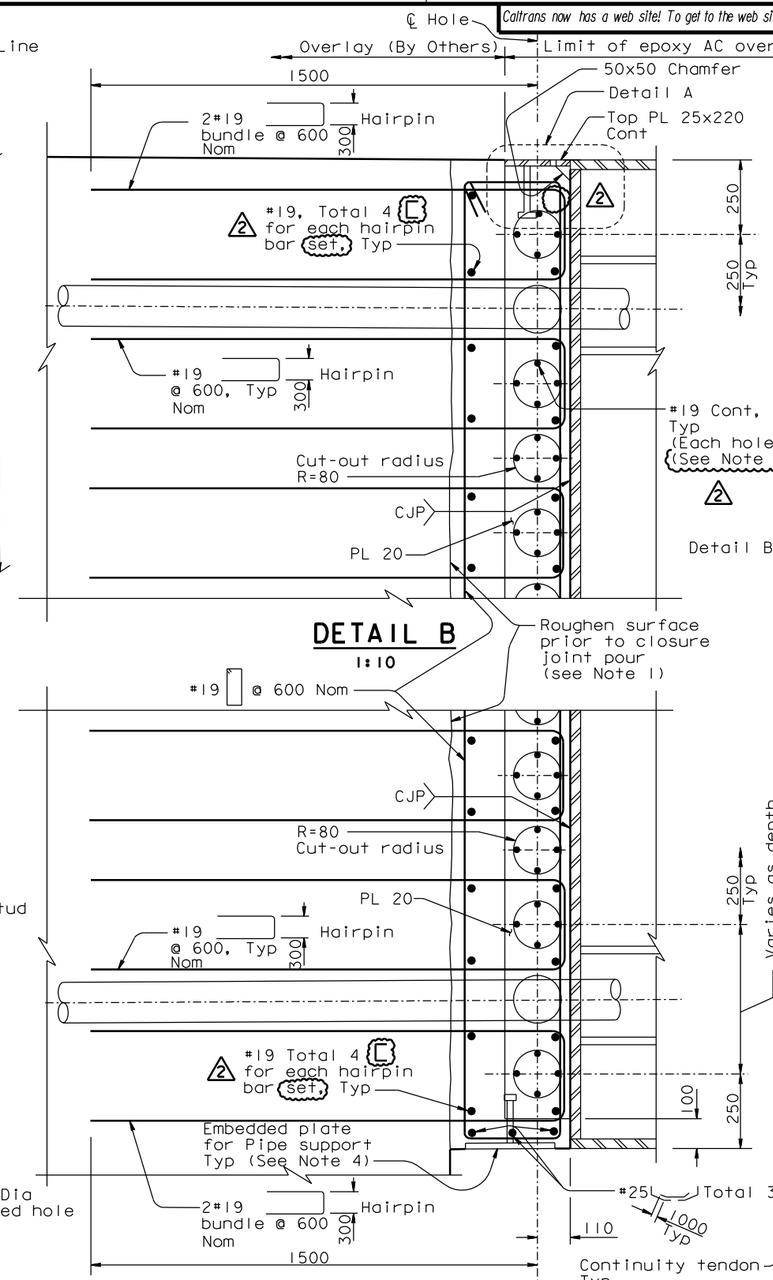

DETAIL B

1:10

DETAIL C

1:10

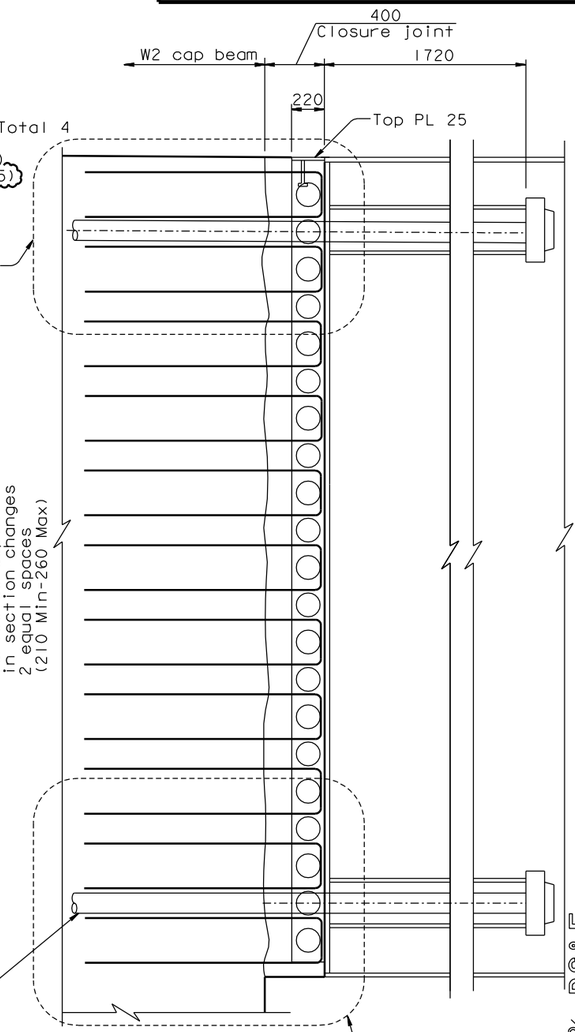

SECTION E-E

1:20

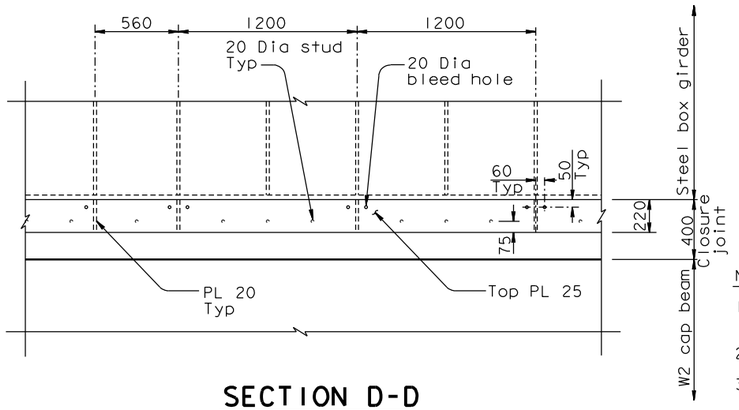

SECTION D-D

(Closure joint reinforcement not shown for clarity)

1:20

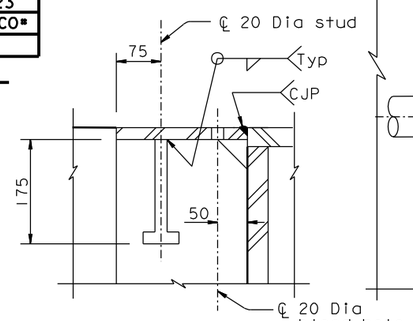

DETAIL A

1:5

NOTES:

1. Roughen the existing W2 Cap Beam concrete surface to a minimum of 5 mm amplitude prior to pouring the closure joint.
2. Reinforcement spacing shall be adjusted to avoid PT ducts if required.
3. All plate shall be ASTM A709M HPS 485W, unless specified otherwise.
4. For pipe support locations and details, see "Road Plans".
5. At the Contractor's option, 2-#29 bundled bars may be used.

ALL DIMENSIONS ARE IN MILLIMETERS UNLESS OTHERWISE SHOWN

MARK	DATE	DESCRIPTIONS	BY	CH'D	CCO#
2	01/31/07	WEST DEVIATION SADDLE GEOMETRY	JD	AS	15
1	07/21/06	GENERAL REVISIONS	JD	AS	23

REVISIONS

REGISTERED PROFESSIONAL ENGINEER James P. Duxbury No. C 64677 Exp. 06/30/07 CIVIL STATE OF CALIFORNIA

FOR REVISIONS ONLY

CONTRACT CHANGE ORDER NO. ____
SHEET ___ OF ___

R. Valizadeh/V. Toan/Y.L./W.L./F.C.
DESIGN OVERSIGHT
Roya Valizadeh / Vong Toan / Y. Liu
SIGN OFF DATE 01/31/07

	BY	CHECKED
DESIGN	J. Sun	M. Chen
DETAILS	J. Duxbury	M. Chen
QUANTITIES	S. Shi	D. Harrison

PREPARED FOR THE STATE OF CALIFORNIA DEPARTMENT OF TRANSPORTATION

R. Manzanarez
PROJECT ENGINEER

BRIDGE NO. 34-0006L/R
KILOMETER POST 13.2/13.9

SAN FRANCISCO OAKLAND BAY BRIDGE
EAST SPAN SEISMIC SAFETY PROJECT
SELF-ANCHORED SUSPENSION BRIDGE
(SUPERSTRUCTURE & TOWER)

W2 CAP BEAM REINFORCEMENT DETAILS NO. 49

Rev. Date: 5-18-98

ORIGINAL SCALE IN MILLIMETERS FOR REDUCED PLANS 0 10 20 30 40 50 60 70 80 90 100

CU 04
EA 0120F1

DISREGARD PRINTS BEARING EARLIER REVISION DATES 07/21/06

REVISION DATES (PRELIMINARY STAGE ONLY)

SHEET 080S25R1 OF

FILE => I:\bb\04-012001\sas\contract plans and cco\cco\in progress\cco#15\aecap48r-s.dgn

100 % PS&E

USERNAME => vignatovsk DATE PLOTTED => 15 MAR 2007 TIME PLOTTED => 15:13:34

DIST.	COUNTY	ROUTE	KILOMETER POST TOTAL PROJECT	SHEET NO.	TOTAL SHEETS
04	SF	80	13.2/13.9	730R1	1204

REGISTERED ENGINEER - CIVIL

12-6-04
PLANS APPROVAL DATE

REGISTERED PROFESSIONAL ENGINEER John Sun No. C 54648 Exp. 12/31/05 CIVIL STATE OF CALIFORNIA

The State of California or its officers or agents shall not be responsible for the accuracy or completeness of electronic copies of this plan sheet.

REGISTERED PROFESSIONAL ENGINEER James P. Duxbury No. C 64677 Exp. 06/30/07 CIVIL STATE OF CALIFORNIA

FOR REVISIONS ONLY

T.Y. LIN / MOFFATT & NICHOL
825 BATTERY STREET
SAN FRANCISCO, CA 94111

Caltrans now has a web site! To get to the web site, go to: http://www.dot.ca.gov

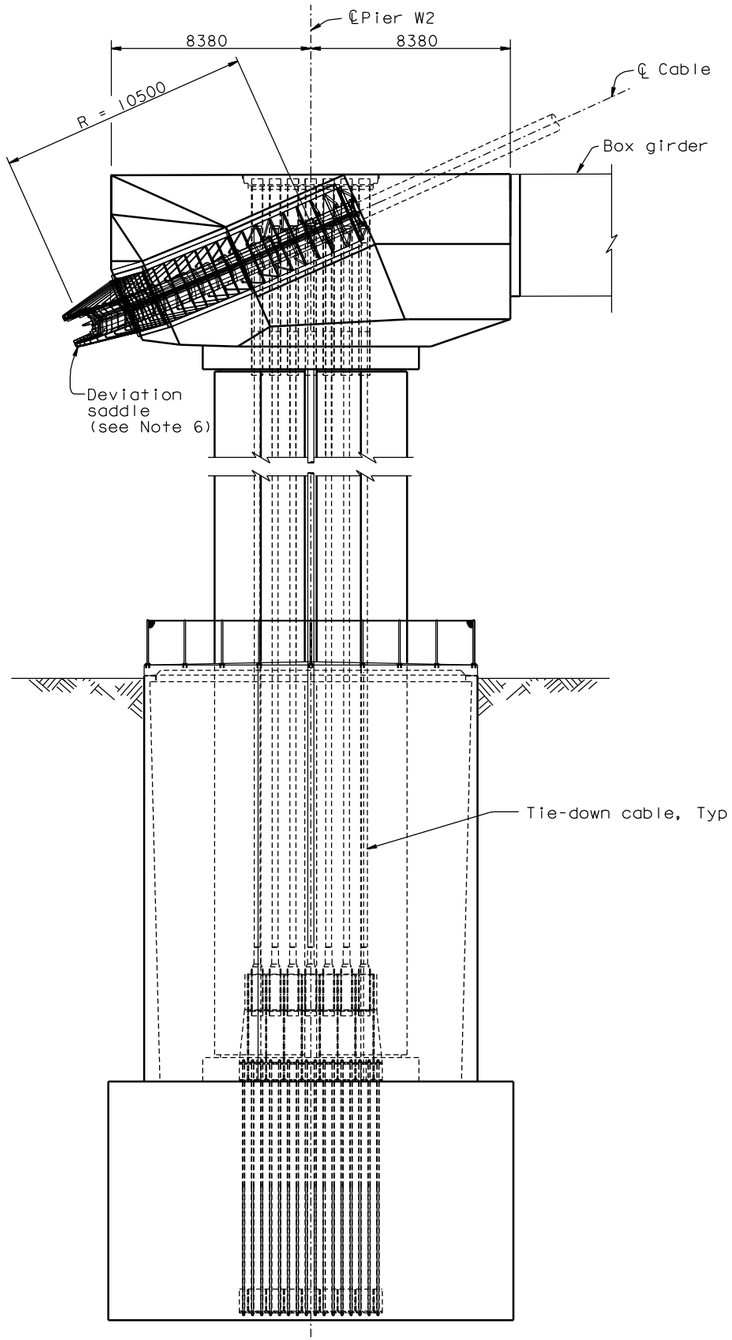

SIDE ELEVATION
1:125

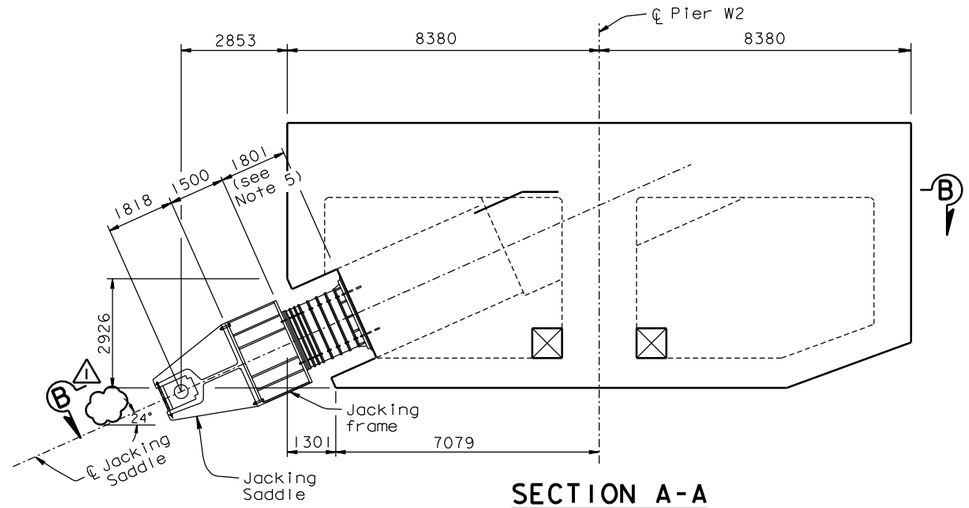

SECTION A-A
1:80

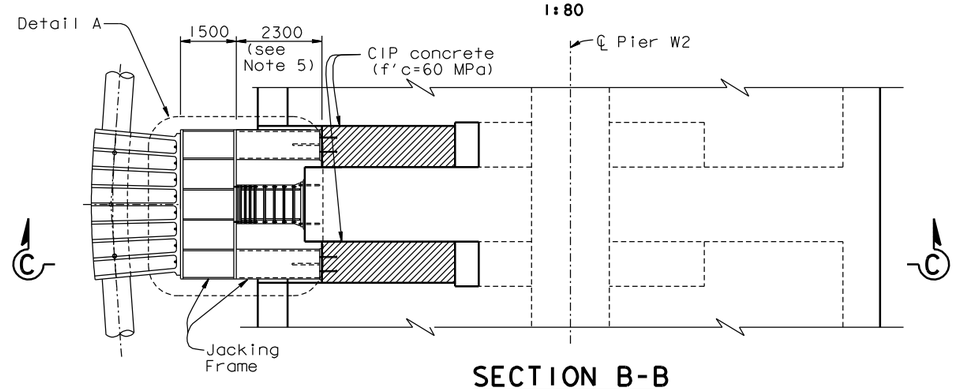

SECTION B-B
1:80

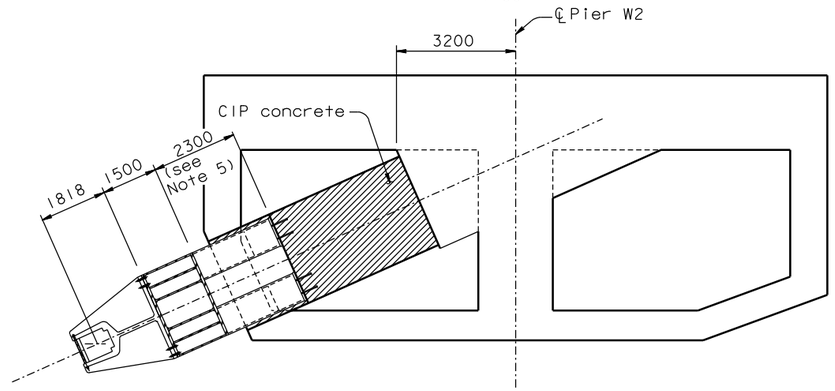

SECTION C-C
1:80

MARK	DATE	DESCRIPTIONS	BY	CH'D	CCO#
1	01/31/07	WEST DEVIATION SADDLE GEOMETRY	AS	JD	15

REVISIONS

CONTRACT CHANGE ORDER NO. ____
SHEET ___ OF ___

LEGEND:

Indicates CIP concrete

NOTES:

1. For additonal details, see "West Cable Anchorage Layout No. 1" sheet.
2. For jacking frame details, see "West Jacking Frame Details" sheets.
3. For anchorage cable jacking procedure, see "West Anchorage Cable Jacking Procedure" sheet.
4. For Detail A, see "West Jacking Frame Details No. 1" sheet.
5. This final position of the jacking saddle is for information only. This dimension will be revised by the Engineer based on the Contractor's final estimate of the suspended weight and the test results of the W2 cap beam concrete properties (elastic shortening, creep effects, shrinkage effects), to provide for equal forces on either side of the deviation saddle. This dimension will include an additional 44 mm to account for 25% of the maximum live load cable tension. (3)
6. Views of the deviation saddle are for illustration only. For deviation saddle details, see "West Deviation Saddle Details" sheets.

(3) **REVISED PER ADDENDUM NO. 3 DATED NOVEMBER 7, 2005**

ALL DIMENSIONS ARE IN MILLIMETERS UNLESS OTHERWISE SHOWN

R. Valizadeh/V. Toan/Y.L./W.L./F.C.
DESIGN OVERSIGHT
Ryan Valizadeh / Vong Toan / Y Lui
SIGN OFF DATE 01/31/07

Rev. Date: 5-18-98

	BY	CHECKED	
DESIGN	J. Sun	T. McMeans	
DETAILS	S. Shi	T. McMeans	
QUANTITIES	J. Duxbury	S. Shi	

ORIGINAL SCALE IN MILLIMETERS FOR REDUCED PLANS 0 10 20 30 40 50 60 70 80 90 100

PREPARED FOR THE STATE OF CALIFORNIA DEPARTMENT OF TRANSPORTATION

R. Manzanarez
PROJECT ENGINEER

CU 04
EA 0120F1

BRIDGE NO. 34-0006L/R
KILOMETER POST 13.2/13.9

DISREGARD PRINTS BEARING EARLIER REVISION DATES

REVISION DATES (PRELIMINARY STAGE ONLY): 05/18/99 08/02/99 05/31/01 04/08/02 07/01/02 12/13/02 09/08/04 10/13/05

SHEET 313R1 OF

SAN FRANCISCO OAKLAND BAY BRIDGE EAST SPAN SEISMIC SAFETY PROJECT
SELF-ANCHORED SUSPENSION BRIDGE (SUPERSTRUCTURE & TOWER)

WEST CABLE ANCHORAGE LAYOUT NO. 3

FILE => I:\bb\04-012001\sas\contract plans and cco\cco\in progress\cco#15\agan103.dgn

100 % PS&E

USERNAME => vignatovsKDATE PLOTTED => 15 MAR 2007 TIME PLOTTED => 15:30:39

DIST.	COUNTY	ROUTE	KILOMETER POST TOTAL PROJECT	SHEET NO.	TOTAL SHEETS
04	SF	80	13.2/13.9	740R1	1204

REGISTERED ENGINEER - CIVIL

12/19/02
PLANS APPROVAL DATE

REGISTERED PROFESSIONAL ENGINEER Marwan N. Nader No. C 054426 Exp. 12/31/07 CIVIL STATE OF CALIFORNIA

The State of California or its officers or agents shall not be responsible for the accuracy or completeness of electronic copies of this plan sheet.

T.Y. LIN / MOFFATT & NICHOL
825 BATTERY STREET
SAN FRANCISCO, CA 94111

To get to the web site, go to: http://www.dot.ca.gov

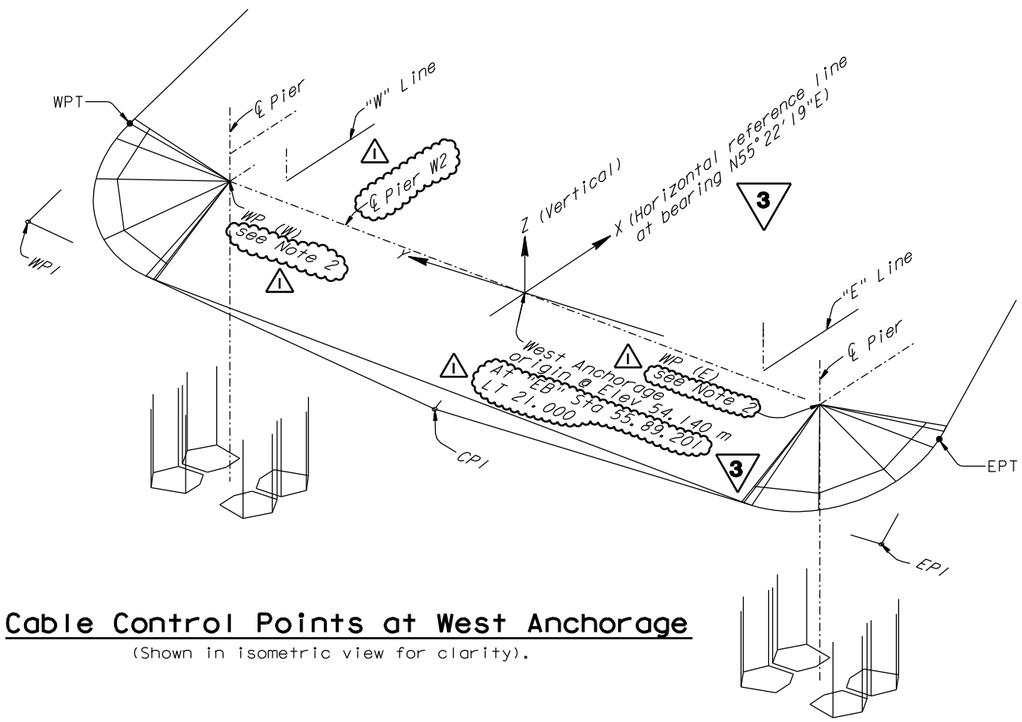

Cable Control Points at West Anchorage

(Shown in isometric view for clarity).

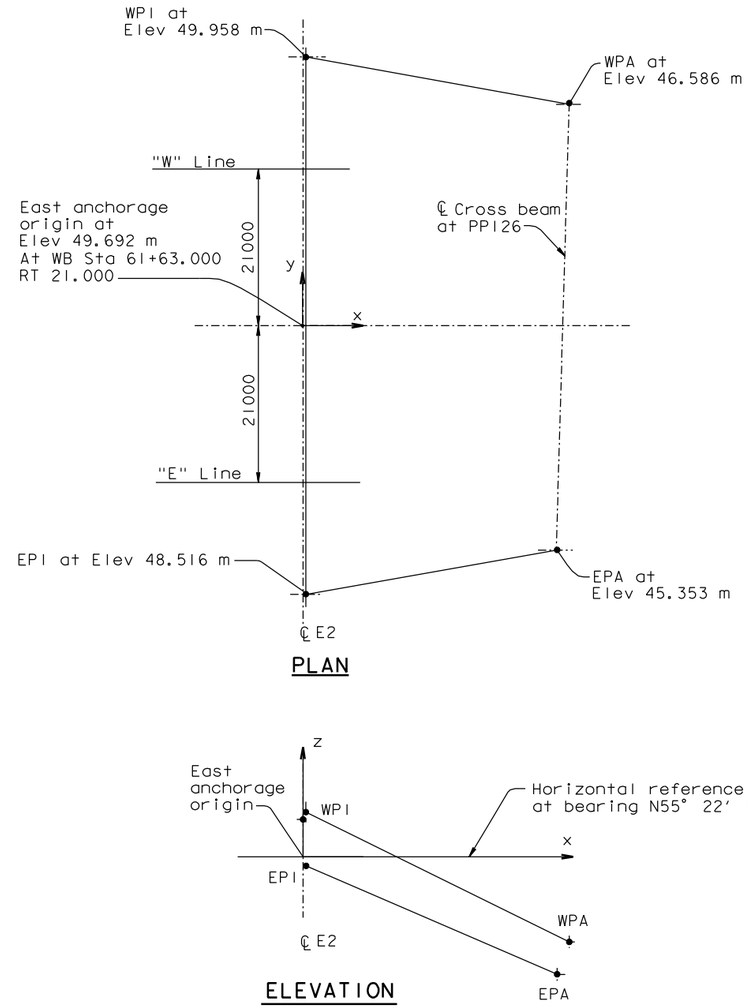

Cable Control Points at East Anchorage

MARK	DATE	DESCRIPTIONS	BY	CH'D	CCO#
1	01/31/07	WEST DEVIATION SADDLE GEOMETRY	AS	MN	15

REVISIONS

CONTRACT CHANGE ORDER NO. _____
SHEET ____ OF ____

NOTES:

1. At the west anchorage the cable profile shall be determined from the EPT and WPT. Geometry of saddles shall conform to EP1, WP1 and CP1.
2. WP(W) & WP(E) do not coincide with ℄ Pier W2, ℄ Pier W2E nor ℄ Pier W2W. (1)

COORDINATES OF CONTROL POINTS OF WEST ANCHORAGE (WEST ANCHORAGE COORDINATE SYSTEM)

	"W" Line Saddle WP	"E" Line Saddle WP	WPT	WP1	CP1	EPT	EP1
X	30	-7	1318	-8804	-11278	1587	-8804
Y	26024	-25978	36396	38086	101	-36352	-38084
Z	1057	-1059	2060	-2411	-5080	-765	-5530

(1)

COORDINATES OF CONTROL POINTS OF EAST ANCHORAGE (EAST ANCHORAGE COORDINATE SYSTEM)

	WP1 (3)	WPA	EP1	EPA
X	393	35852	393	34114
Y	36045	29461	-36025	-29939
Z	266	-3106	-1176	-4339

(3) **REVISED PER ADDENDUM NO. 3 DATED NOVEMBER 7, 2005**

ALL DIMENSIONS ARE IN MILLIMETERS UNLESS OTHERWISE SHOWN

R. Valizadeh/V. Toan/Y.L./W.L./F.C.
DESIGN OVERSIGHT
Roya Valizadeh / Vona Toan / Y. Liu
SIGN OFF DATE 01/31/07

	BY	CHECKED
DESIGN	M. Nader	S. Rodriguez
DETAILS	C. Mibelli	S. Rodriguez
QUANTITIES	C. Mibelli	G. Baker

PREPARED FOR THE STATE OF CALIFORNIA DEPARTMENT OF TRANSPORTATION

R. Manzanarez
PROJECT ENGINEER

BRIDGE NO. 34-0006L/R
KILOMETER POST 13.2/13.9

SAN FRANCISCO OAKLAND BAY BRIDGE
EAST SPAN SEISMIC SAFETY PROJECT
SELF-ANCHORED SUSPENSION BRIDGE
(SUPERSTRUCTURE & TOWER)

SUSPENSION CABLE LAYOUT NO. 3

Rev. Date: 5-18-98

ORIGINAL SCALE IN MILLIMETERS FOR REDUCED PLANS 0 10 20 30 40 50 60 70 80 90 100

CU 04
EA 0120F1

DISREGARD PRINTS BEARING EARLIER REVISION DATES

REVISION DATES (PRELIMINARY STAGE ONLY): 05/15/99 08/02/99 05/23/01 04/08/02 07/01/02 12/19/02

SHEET 323R1 OF

FILE => I:\bb\04-012001\sas\contract plans and cco\cco\in progress\cco#15\agsc103.dgn

100% PS&E

USERNAME => vignatovsky DATE PLOTTED => 20 MAR 2007 TIME PLOTTED => 07:30:57

DIST.	COUNTY	ROUTE	KILOMETER POST TOTAL PROJECT	SHEET NO.	TOTAL SHEETS
04	SF	80	13.2/13.9	766R1	1204

Caltrans Metric

REGISTERED ENGINEER - CIVIL

12-6-04
PLANS APPROVAL DATE

REGISTERED PROFESSIONAL ENGINEER John Sun No. C 54648 Exp. 12/31/05 CIVIL STATE OF CALIFORNIA

The State of California or its officers or agents shall not be responsible for the accuracy or completeness of electronic copies of this plan sheet.

T.Y. LIN / MOFFATT & NICHOL
825 BATTERY STREET
SAN FRANCISCO, CA 94111

To get to the web site, go to: http://www.dot.ca.gov

REGISTERED PROFESSIONAL ENGINEER James P. Duxbury No. C 64677 Exp. 06/30/07 CIVIL STATE OF CALIFORNIA

FOR REVISIONS ONLY

MARK	DATE	DESCRIPTIONS	BY	CH'D	CCO#
1	01/31/07	WEST DEVIATION SADDLE GEOMETRY	GB	JD	15

REVISIONS

CONTRACT CHANGE ORDER NO. ____
SHEET ___ OF ___

5 **REVISED PER ADDENDUM NO. 5 DATED DECEMBER 21, 2005**

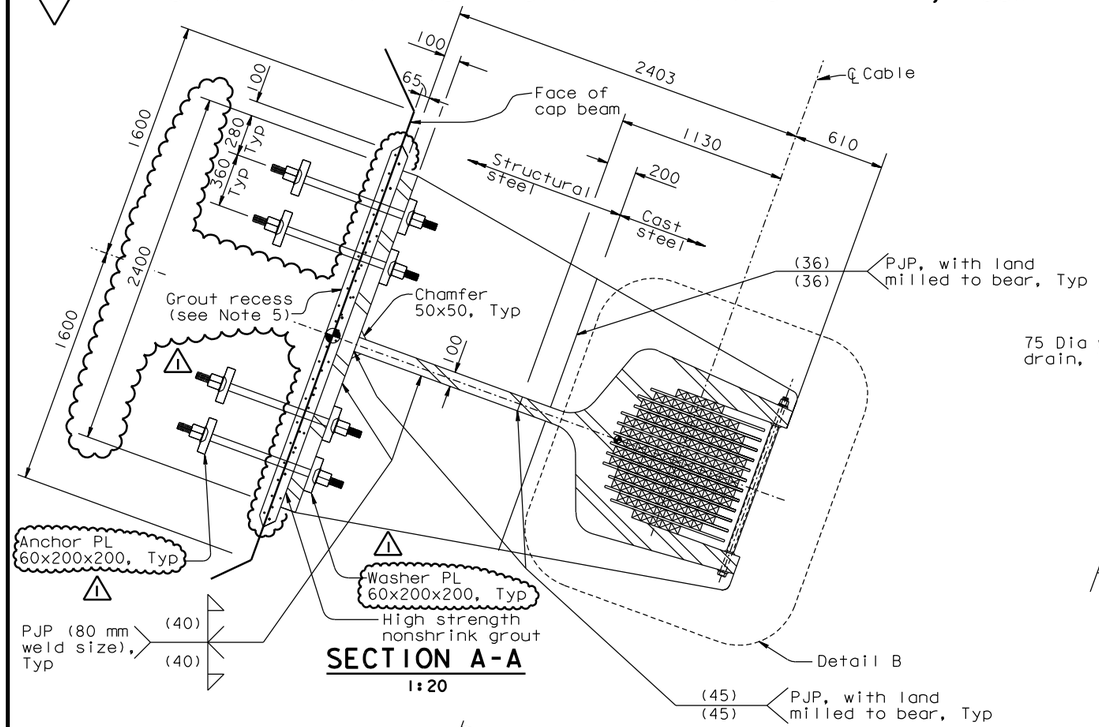

SECTION A-A
1:20

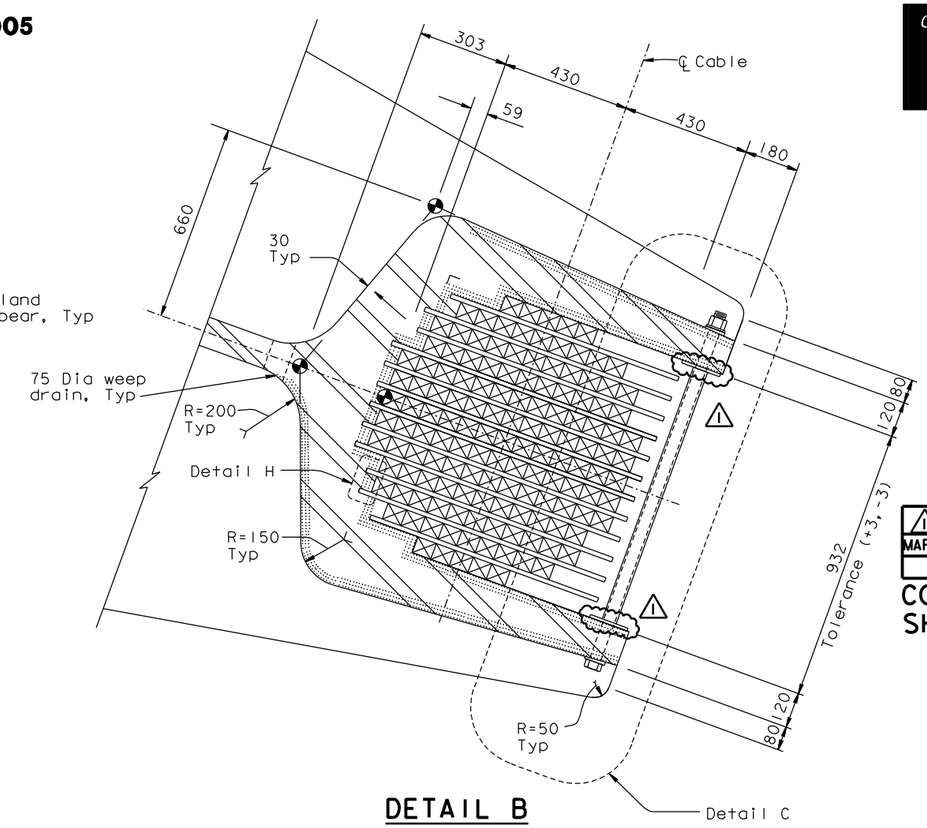

DETAIL B
1:10

4 **REVISED PER ADDENDUM NO. 4 DATED DECEMBER 9, 2005**

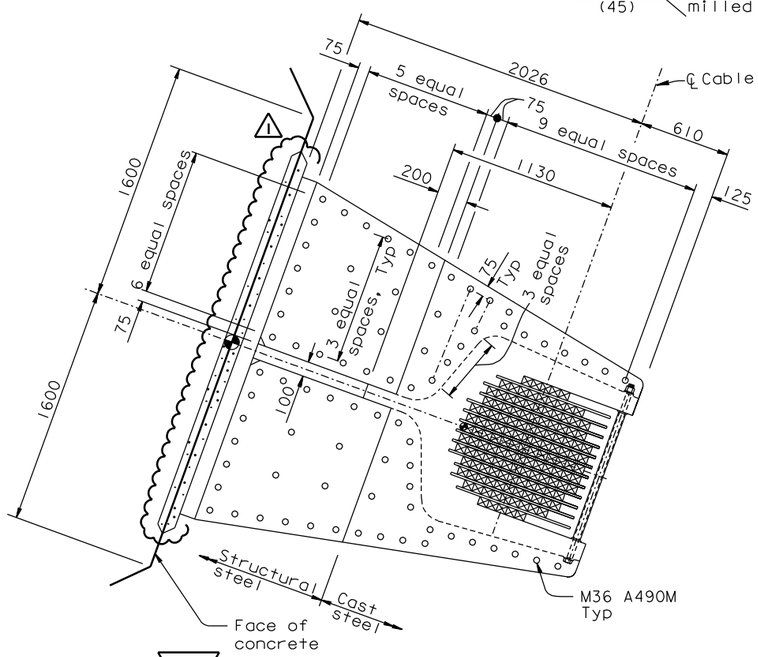

SECTION B-B
1:20

(Anchor rods not shown for clarity)

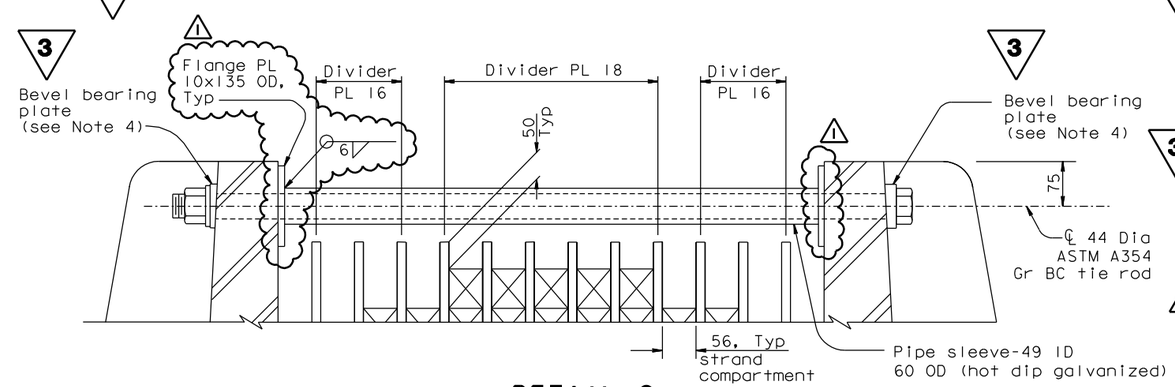

DETAIL C
1:5

LEGEND:

Indicates zone with Level 1 testing requirements (30 mm from final interior and exterior surface of trough for entire length of saddle)

3 **REVISED PER ADDENDUM NO. 3 DATED NOVEMBER 7, 2005**

NOTES:

1. For additional details, see "West Deviation Saddle Details No. 1" sheet.
2. For Detail H, see "West Deviation Saddle Details No. 3" sheet.
3. Built-up plates used in saddle fabrication in lieu of cast components shall match the dimensions of the cast components they replace within the specified tolerances for the casting. Any variation in thickness between the parts shall be ground off with a taper of 1:2.5.
4. In lieu of the bevel PL, the Contractor may counterbore the casting up to 12 mm to form a level bearing surface for the nut and washer.
5. West deviation saddle grout recess (depth =50 mm) shall be parallel to concrete faces of cap beam.

ALL DIMENSIONS ARE IN MILLIMETERS UNLESS OTHERWISE SHOWN

SAN FRANCISCO OAKLAND BAY BRIDGE
EAST SPAN SEISMIC SAFETY PROJECT
SELF-ANCHORED SUSPENSION BRIDGE
(SUPERSTRUCTURE & TOWER)

WEST DEVIATION SADDLE DETAILS NO. 2

R. Valizadeh/V. Toan/Y.L./W.L./F.C.
DESIGN OVERSIGHT
Ryan Valizadeh / Vong Toan / Y. Liu
SIGN OFF DATE 01/31/07

	BY	CHECKED
DESIGN	J. Sun	T. McMeans
DETAILS	J. Duxbury	T. McMeans
QUANTITIES	J. Duxbury	S. Shi

PREPARED FOR THE STATE OF CALIFORNIA DEPARTMENT OF TRANSPORTATION

R. Manzanarez
PROJECT ENGINEER

BRIDGE NO. 34-0006L/R
KILOMETER POST 13.2/13.9

CU 04
EA 0120F1

Rev. Date: 5-18-98

ORIGINAL SCALE IN MILLIMETERS FOR REDUCED PLANS 0 10 20 30 40 50 60 70 80 90 100

DISREGARD PRINTS BEARING EARLIER REVISION DATES

REVISION DATES (PRELIMINARY STAGE ONLY) 05/15/99 08/20/99 05/31/01 04/08/02 07/01/02 12/18/02 09/08/04 10/13/05 11/13/05 12/07/05

SHEET 349R1 OF

FILE => I:\bb\04-012001\sas\contract plans and cco\cco\in progress\cco#15\agsdd02.dgn

100 % PS&E

USERNAME => vignatovs DATE PLOTTED => 15 MAR 2007 TIME PLOTTED => 15:34:34

DIST.	COUNTY	ROUTE	KILOMETER POST TOTAL PROJECT	SHEET NO.	TOTAL SHEETS
04	SF	80	13.2/13.9	765R1	1204

REGISTERED ENGINEER - CIVIL

12-6-04
PLANS APPROVAL DATE

REGISTERED PROFESSIONAL ENGINEER John Sun No. C 54648 Exp. 12/31/05 CIVIL STATE OF CALIFORNIA

The State of California or its officers or agents shall not be responsible for the accuracy or completeness of electronic copies of this plan sheet.

T.Y. LIN / MOFFATT & NICHOL
825 BATTERY STREET
SAN FRANCISCO, CA 94111

To get to the web site, go to: http://www.dot.ca.gov

REGISTERED PROFESSIONAL ENGINEER James P. Duxbury No. C 64677 Exp. 06/30/07 CIVIL STATE OF CALIFORNIA

FOR REVISIONS ONLY

MARK	DATE	DESCRIPTIONS	BY	CH'D	CCO#
1	01/31/07	WEST DEVIATION SADDLE GEOMETRY	NV	JD	15

REVISIONS

CONTRACT CHANGE ORDER NO. ____
SHEET ___ OF ___

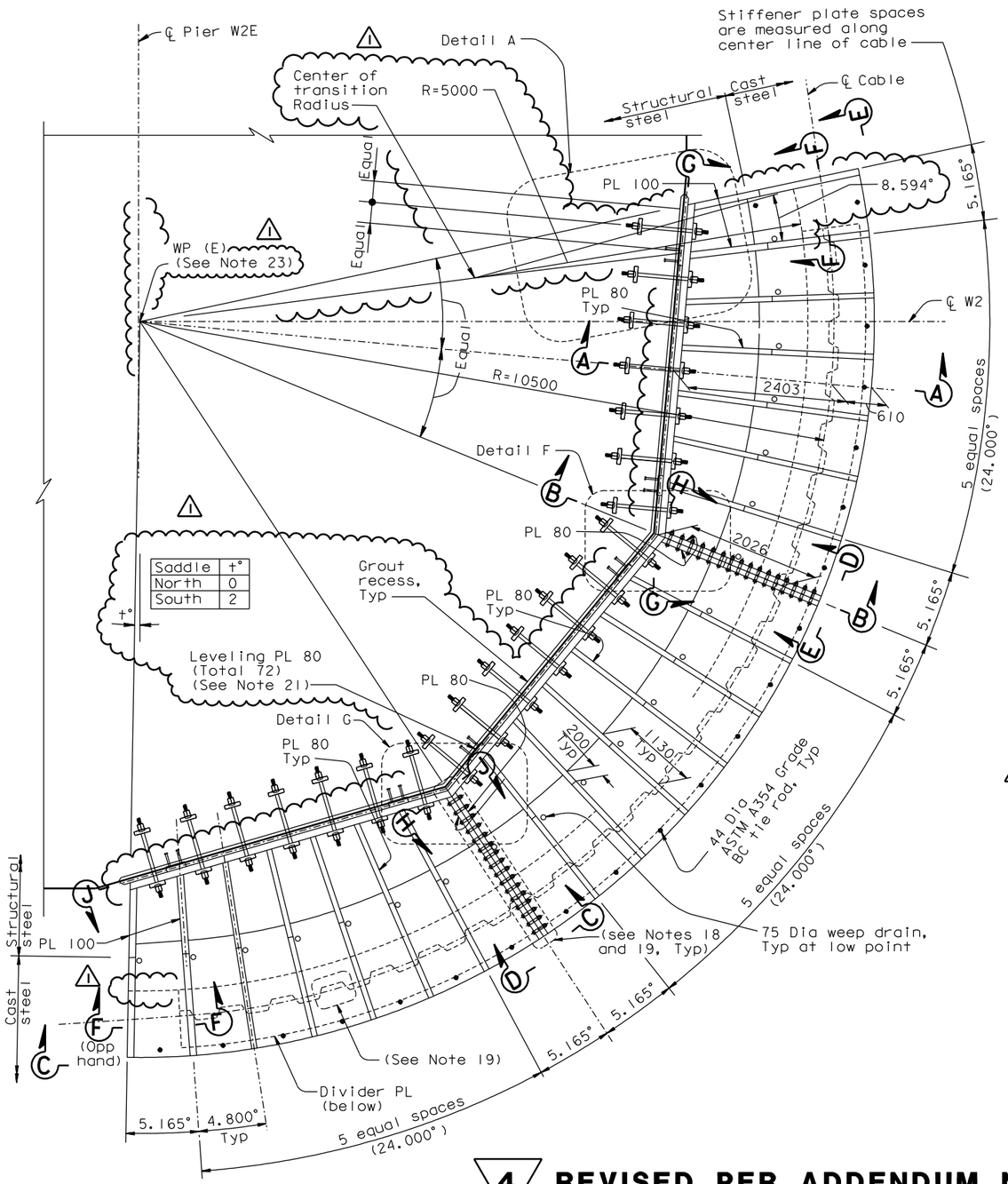

PLAN VIEW
1:40

(In the plan of the Deviation saddle)
(South Deviation saddle shown
North Deviation saddle opposite hand,
except as noted)

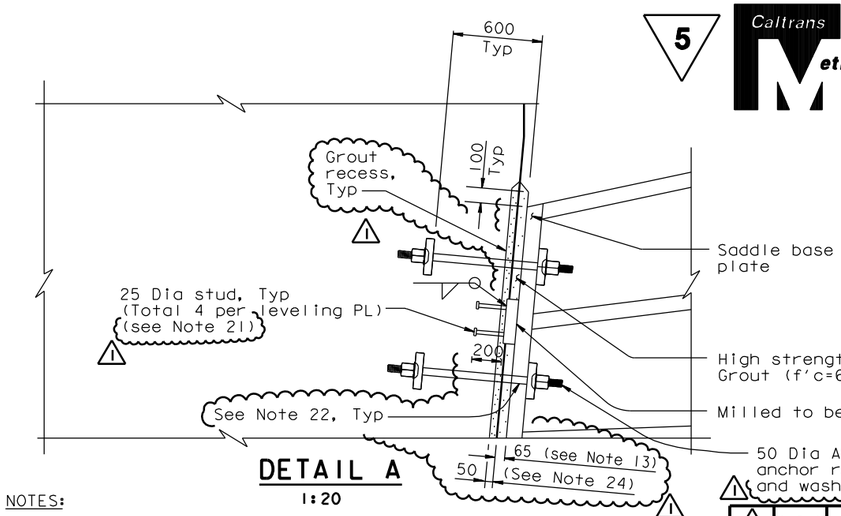

DETAIL A
1:20

NOTES:

1. For additional details, see "Suspension Cable Layout No.3" sheet.
2. For Sections A-A and B-B, see "West Deviation Saddle Details No.2" sheet.
3. For Sections C-C through F-F, see "West Deviation Saddle Details No.3" sheet.
4. For anchor rod layout, see Sections G-G through J-J on "West Deviation Saddle Details No.4" sheet.
5. For Details F and G, see "West Deviation Saddle Details No.4" sheet.
6. Only saddle at south end of cap beam shown. The deviation saddle at north end of cap beam is similar.
7. West deviation saddle anchor rods are ASTM A354 Gr BC high strength 50 Dia rods (fu=862 MPa) with standard galvanized steel ducts, unless specified otherwise. For additional prestressing details, see "Prestressing Notes" sheet. The Contractor may substitute the PT duct with a PT Supplier recommended debonding tape, subject to review and approval of the Engineer. If the PT duct substitution is approved by the Engineer, the spherical nut inside the W2 cap beam is not required.
8. During placement of cap beam concrete, the anchor rods shall be held in position by steel templates, which shall be removed after concrete has set. The steel templates shall be used to drill the holes for the anchor rods in the saddle base plates. In lieu of using the template to drill the holes in the Saddle base PL the Contractor may use detailed anchor rod as-built drawings and drill the anchor rod holes in the Saddle base PLs.
9. All casting steel shall be Structural Casting Grade 415, unless specified otherwise.
10. All plates shall be ASTM A709M HPS 485W, unless specified otherwise.
11. Tension the 44 Dia ASTM A354 Grade BC tie rods to 50% of their yield capacities after the main suspension cable erection.
12. For general stressing sequence, see "Pier W2 Construction Sequence" sheet.
13. The grout pad thickness is shown for information only. The Contractor may adjust the grout pad thickness to ensure proper placement of the deviation saddle in their final erected position.
14. All surfaces inside the trough shall be machined to ANSI 500 roughness. The geometric tolerance of the surfaces shall not exceed ±1.5 mm per meter of surfaces without sudden kinks.
15. The inside of the troughs shall be metallized with a coating thickness not less than 0.4 mm.
16. All divider plates shall be hot dip galvanized with Class A coating.
17. For detail of divider PL joint, see "West Deviation Saddle Details No.3" sheet.
18. West deviation saddle segments shall be bolted together prior to tightening anchor rods.
19. In the bolted splices the flatness of the faying surfaces shall be ±0.5 mm per meter, and the gap between them shall not exceed 0.5 mm per meter. The perimeters of faying surfaces shall be caulked.
20. Contact surface between the leveling plate and the deviation saddle shall be milled to bear.
21. The Contractor may substitute or remove the embedded Leveling PL to suit his erection means & methods, subject to review and approval of the Engineer.
22. At the Contractor's option, 90 max. diameter oversized holes may be shop drilled in the saddle base PL.
23. WP (E) and WP (W) do not coincide with the ℄ Pier W2, ℄ Pier W2E nor ℄ Pier W2W.
24. West deviation saddle grout recess shall be parallel to concrete faces of cap beam.

4 REVISED PER ADDENDUM NO. 4 DATED DECEMBER 9, 2005

5 REVISED PER ADDENDUM NO. 5 DATED DECEMBER 21, 2005

ALL DIMENSIONS ARE IN MILLIMETERS UNLESS OTHERWISE SHOWN

100 % PS&E

SAN FRANCISCO OAKLAND BAY BRIDGE
EAST SPAN SEISMIC SAFETY PROJECT
SELF-ANCHORED SUSPENSION BRIDGE
(SUPERSTRUCTURE & TOWER)

WEST DEVIATION SADDLE DETAILS NO. 1

R. Valizadeh/V. Toan/Y.L./W.L./F.C.
DESIGN OVERSIGHT
SIGN OFF DATE 01/31/07

	BY	CHECKED
DESIGN	J. Sun	T. McMeans
DETAILS	J. Duxbury	T. McMeans
QUANTITIES	J. Duxbury	S. Shi

PREPARED FOR THE STATE OF CALIFORNIA DEPARTMENT OF TRANSPORTATION

R. Manzanarez
PROJECT ENGINEER

BRIDGE NO. 34-0006L/R
KILOMETER POST 13.2/13.9

CU 04
EA 0120F1

Rev. Date: 5-18-98

ORIGINAL SCALE IN MILLIMETERS FOR REDUCED PLANS 0 10 20 30 40 50 60 70 80 90 100

DISREGARD PRINTS BEARING EARLIER REVISION DATES

REVISION DATES (PRELIMINARY STAGE ONLY): 05/15/99 08/02/99 05/31/01 04/08/02 07/01/02 12/18/02 09/06/04 11/13/05 12/01/05

SHEET 348R1 OF

FILE => I:\bb\04-0120F1\sas\contract plans and cco\cco\in progress\cco#15\agsdd01.dgn

USERNAME => vignatovsky DATE PLOTTED => 15 MAR 2007 TIME PLOTTED => 15:33:35

5 **REVISED PER ADDENDUM NO. 5 DATED DECEMBER 21, 2005**

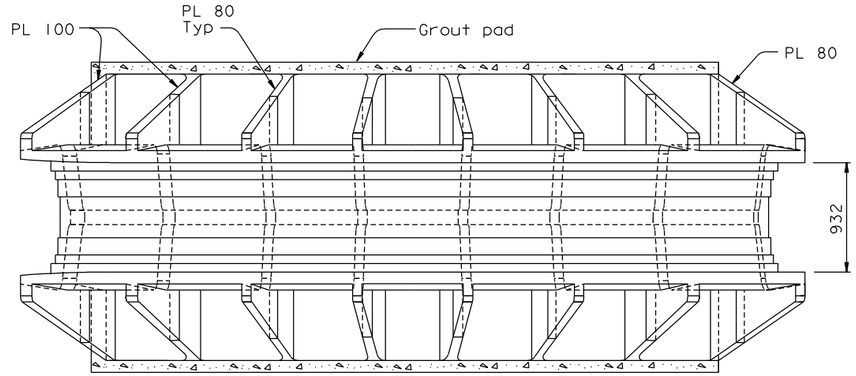

5 SECTION C-C
1:25

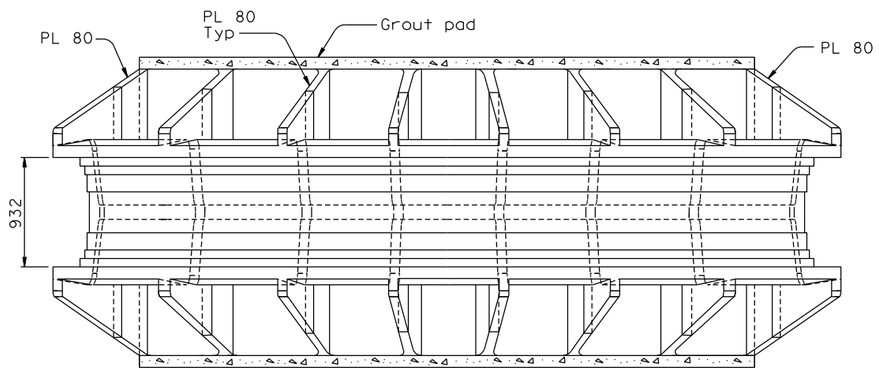

5 SECTION D-D
1:25

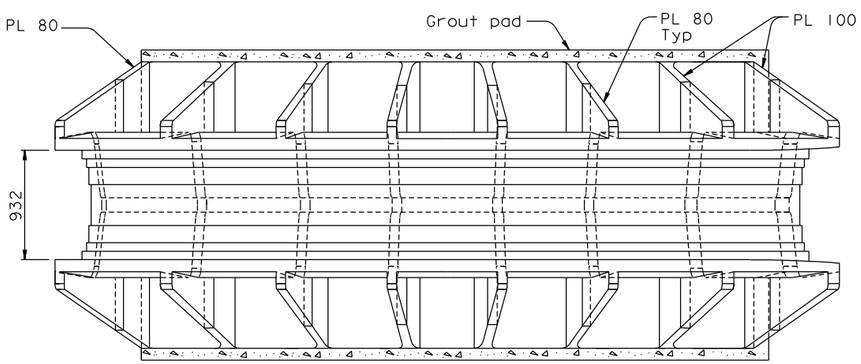

5 SECTION E-E
1:25

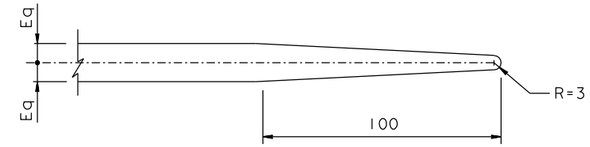

DETAIL E
1:1.25

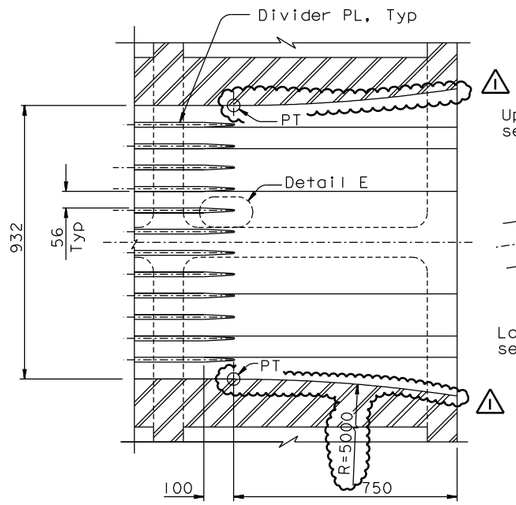

SECTION F-F
1:10

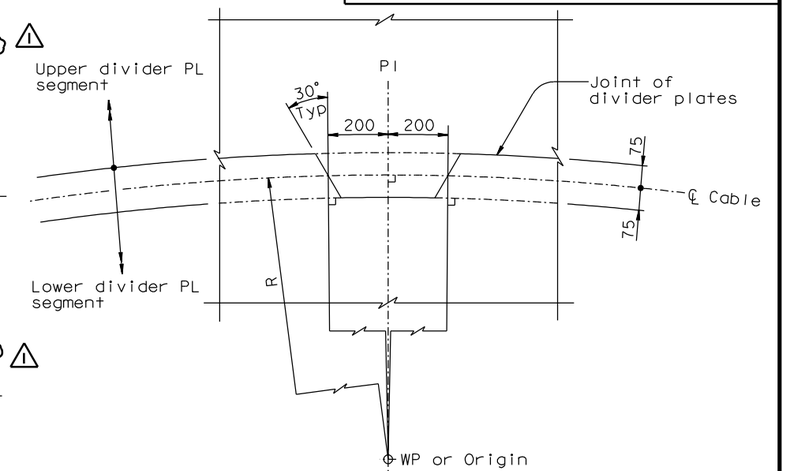

TYPICAL DETAIL OF DIVIDER PLATE JOINT
1:10
(See Note 3 and 4)

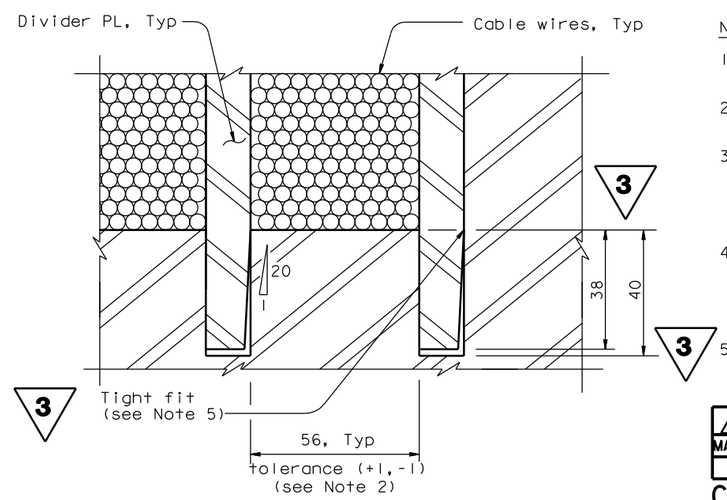

DETAIL H
1:1

3 **REVISED PER ADDENDUM NO. 3 DATED NOVEMBER 7, 2005**

NOTES:

1. Divider PL and splice bolts not shown in Sections C-C through E-E for clarity.
2. The trough width, including all dividers and compartments, shall be 932 (tolerance +3,-3).
3. Divider PL may be installed in upper and lower segments. Segments shall fit plumb and true at the joint. Plates surface which are misaligned by 0.5 mm or less shall be ground smooth. Plates misaligned by more than 0.5 mm shall be rejected.
4. The Contractor may propose alternative divider plate details consistent with his means and methods, which may include additional joints, and shall submit them to the Engineer for review and approval.
5. The tapered faces of the divider plates shall be placed facing downwards.

MARK	DATE	DESCRIPTIONS	BY	CH'D	CCO#
1	01/31/07	WEST DEVIATION SADDLE GEOMETRY	AS	JD	15

REVISIONS

CONTRACT CHANGE ORDER NO. _____
SHEET ___ OF ___

ALL DIMENSIONS ARE IN MILLIMETERS UNLESS OTHERWISE SHOWN

DIST.	COUNTY	ROUTE	KILOMETER POST TOTAL PROJECT	SHEET NO.	TOTAL SHEETS
04	SF	80	13.2/13.9	767R1	1204

Caltrans Metric

REGISTERED ENGINEER - CIVIL
12-6-04
PLANS APPROVAL DATE

REGISTERED PROFESSIONAL ENGINEER John Sun No. C 54648 Exp. 12/31/05 CIVIL STATE OF CALIFORNIA

The State of California or its officers or agents shall not be responsible for the accuracy or completeness of electronic copies of this plan sheet.

REGISTERED PROFESSIONAL ENGINEER James P. Duxbury No. C 64677 Exp. 06/30/07 CIVIL STATE OF CALIFORNIA

FOR REVISIONS ONLY

T.Y. LIN / MOFFATT & NICHOL
825 BATTERY STREET
SAN FRANCISCO, CA 94111

To get to the web site, go to: http://www.dot.ca.gov

100 % PS&E

R. Valizadeh/V. Toan/Y.L./W.L./F.C.
DESIGN OVERSIGHT
Roya Valizadeh / Vong Toan / Y. Liu
SIGN OFF DATE 01/31/07

	BY	CHECKED
DESIGN	J. Sun	T. McMeans
DETAILS	J. Duxbury	T. McMeans
QUANTITIES	J. Duxbury	S. Shi

PREPARED FOR THE STATE OF CALIFORNIA DEPARTMENT OF TRANSPORTATION

R. Manzanarez
PROJECT ENGINEER

BRIDGE NO. 34-0006L/R
KILOMETER POST 13.2/13.9

SAN FRANCISCO OAKLAND BAY BRIDGE
EAST SPAN SEISMIC SAFETY PROJECT
SELF-ANCHORED SUSPENSION BRIDGE (SUPERSTRUCTURE & TOWER)

WEST DEVIATION SADDLE DETAILS NO. 3

Rev. Date: 5-18-98

ORIGINAL SCALE IN MILLIMETERS FOR REDUCED PLANS 0 10 20 30 40 50 60 70 80 90 100

CU 04
EA 0120F1

DISREGARD PRINTS BEARING EARLIER REVISION DATES

REVISION DATES (PRELIMINARY STAGE ONLY): 05/13/99 08/02/99 05/31/01 04/08/02 07/01/02 12/18/02 09/06/04 10/13/05 12/01/05

SHEET 350R1 OF

FILE => I:\bb\04-012001\sas\contract plans and cco\cco\in progress\cco#15\agsdd03.dgn

USERNAME => vignatovsky DATE PLOTTED => 15 MAR 2007 TIME PLOTTED => 15:35:55

DIST.	COUNTY	ROUTE	KILOMETER POST TOTAL PROJECT	SHEET NO.	TOTAL SHEETS
04	SF	80	13.2/13.9	768R1	1204

REGISTERED ENGINEER - CIVIL

12-6-04
PLANS APPROVAL DATE

REGISTERED PROFESSIONAL ENGINEER John Sun No. C 54648 Exp. 12/31/05 CIVIL STATE OF CALIFORNIA

The State of California or its officers or agents shall not be responsible for the accuracy or completeness of electronic copies of this plan sheet.

T.Y. LIN / MOFFATT & NICHOL
825 BATTERY STREET
SAN FRANCISCO, CA 94111

Caltrans now has a web site! To get to the web site, go to: http://www.dot.ca.gov

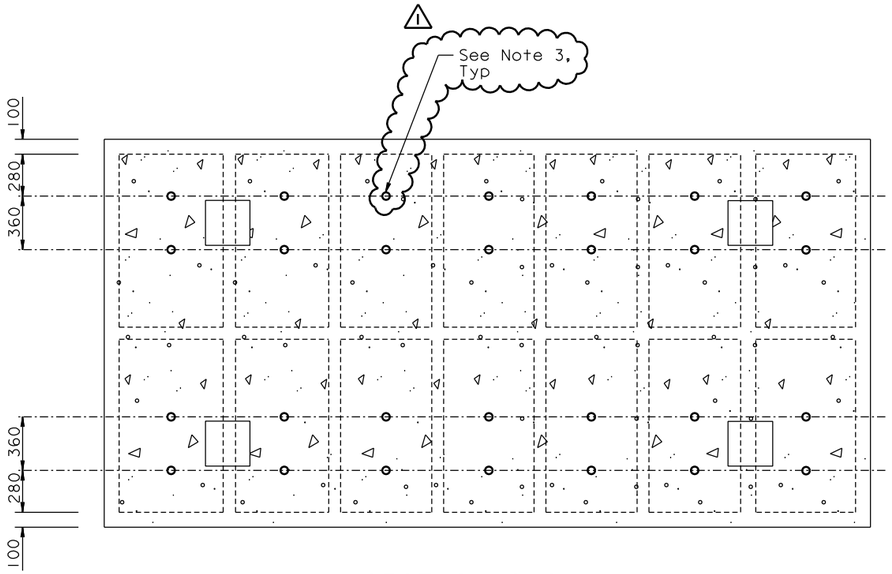

SECTION G-G
1:20

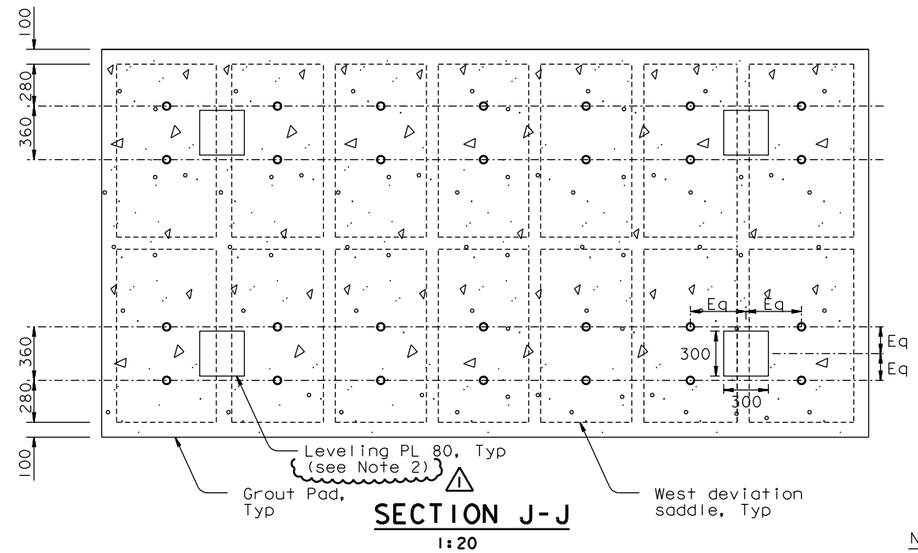

SECTION J-J
1:20

5 **REVISED PER ADDENDUM NO. 5 DATED DECEMBER 21, 2005**

NOTES:

1. For additional details, see "West Deviation Saddle Details No.1" sheet.
2. The Contractor may substitute or remove the embedded Leveling PL to suit his erection means and methods, subject to review and approval of the Engineer. The Contractor may place galvanized shim packs or wedges between the deviation saddles and the W2 Cap beam concrete to secure the saddles during grout placement.
3. At the Contractor's option, 90 max diameter oversized holes may be shop drilled in the saddle base PL.

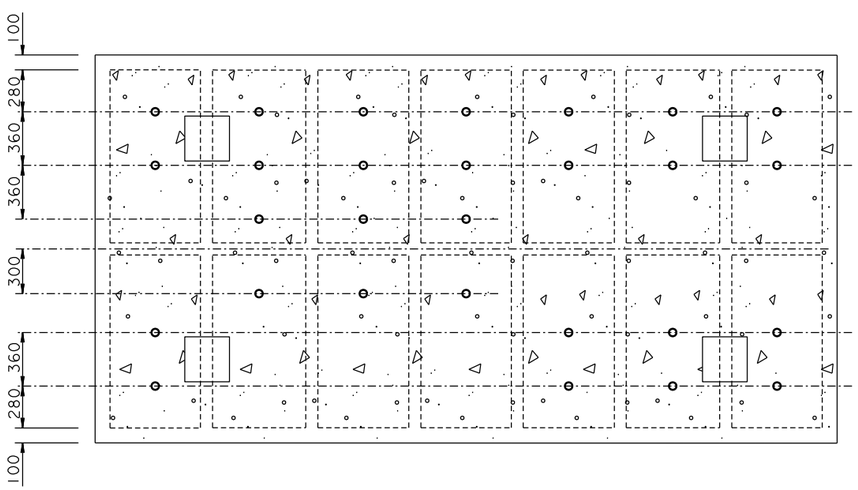

SECTION H-H
1:20

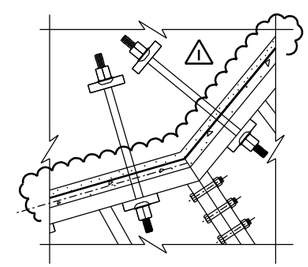

DETAIL G
1:20

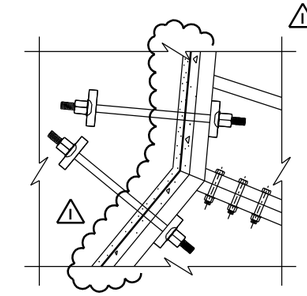

DETAIL F
1:20

REGISTERED PROFESSIONAL ENGINEER James P. Duxbury No. C 64677 Exp. 06/30/07 CIVIL STATE OF CALIFORNIA

FOR REVISIONS ONLY

MARK	DATE	DESCRIPTIONS	BY	CH'D	CCO#
1	01/31/07	WEST DEVIATION SADDLE GEOMETRY	GB	JD	15

REVISIONS

CONTRACT CHANGE ORDER NO. _____
SHEET ____ OF ____

ALL DIMENSIONS ARE IN MILLIMETERS UNLESS OTHERWISE SHOWN

R. Valizadeh/V. Toan/Y.L./W.L./F.C.
DESIGN OVERSIGHT
SIGN OFF DATE 01/31/07

DESIGN	BY J. Sun	CHECKED T. McMeans	
DETAILS	BY J. Duxbury	CHECKED T. McMeans	
QUANTITIES	BY J. Duxbury	CHECKED S. Shi	

PREPARED FOR THE STATE OF CALIFORNIA DEPARTMENT OF TRANSPORTATION

R. Manzanarez
PROJECT ENGINEER

BRIDGE NO. 34-0006L/R
KILOMETER POST 13.2/13.9

SAN FRANCISCO OAKLAND BAY BRIDGE EAST SPAN SEISMIC SAFETY PROJECT
SELF-ANCHORED SUSPENSION BRIDGE (SUPERSTRUCTURE & TOWER)
WEST DEVIATION SADDLE DETAILS NO. 4

Rev. Date: 5-18-98

ORIGINAL SCALE IN MILLIMETERS FOR REDUCED PLANS 0 10 20 30 40 50 60 70 80 90 100

CU 04
EA 0120F1

DISREGARD PRINTS BEARING EARLIER REVISION DATES

REVISION DATES (PRELIMINARY STAGE ONLY): 05/31/01 04/08/02 07/01/02 12/19/02 09/08/04 12/07/05

SHEET 351R1 OF

FILE => I:\bb\04-012001\sas\contract plans and cco\cco\in progress\cco#15\agsdd04.dgn

100 % PS&E

USERNAME => vlgnotovski DATE PLOTTED => 15 MAR 2007 TIME PLOTTED => 15:38:08

DIST.	COUNTY	ROUTE	KILOMETER POST TOTAL PROJECT	SHEET NO.	TOTAL SHEETS
04	SF	80	13.2/13.9	769R1	1204

Caltrans Metric

REGISTERED ENGINEER - CIVIL

12-6-04
PLANS APPROVAL DATE

REGISTERED PROFESSIONAL ENGINEER John Sun No. C 54648 Exp. 12/31/05 CIVIL STATE OF CALIFORNIA

The State of California or its officers or agents shall not be responsible for the accuracy or completeness of electronic copies of this plan sheet.

T.Y. LIN / MOFFATT & NICHOL
825 BATTERY STREET
SAN FRANCISCO, CA 94111

Caltrans now has a web site! To get to the web site, go to: http://www.dot.ca.gov

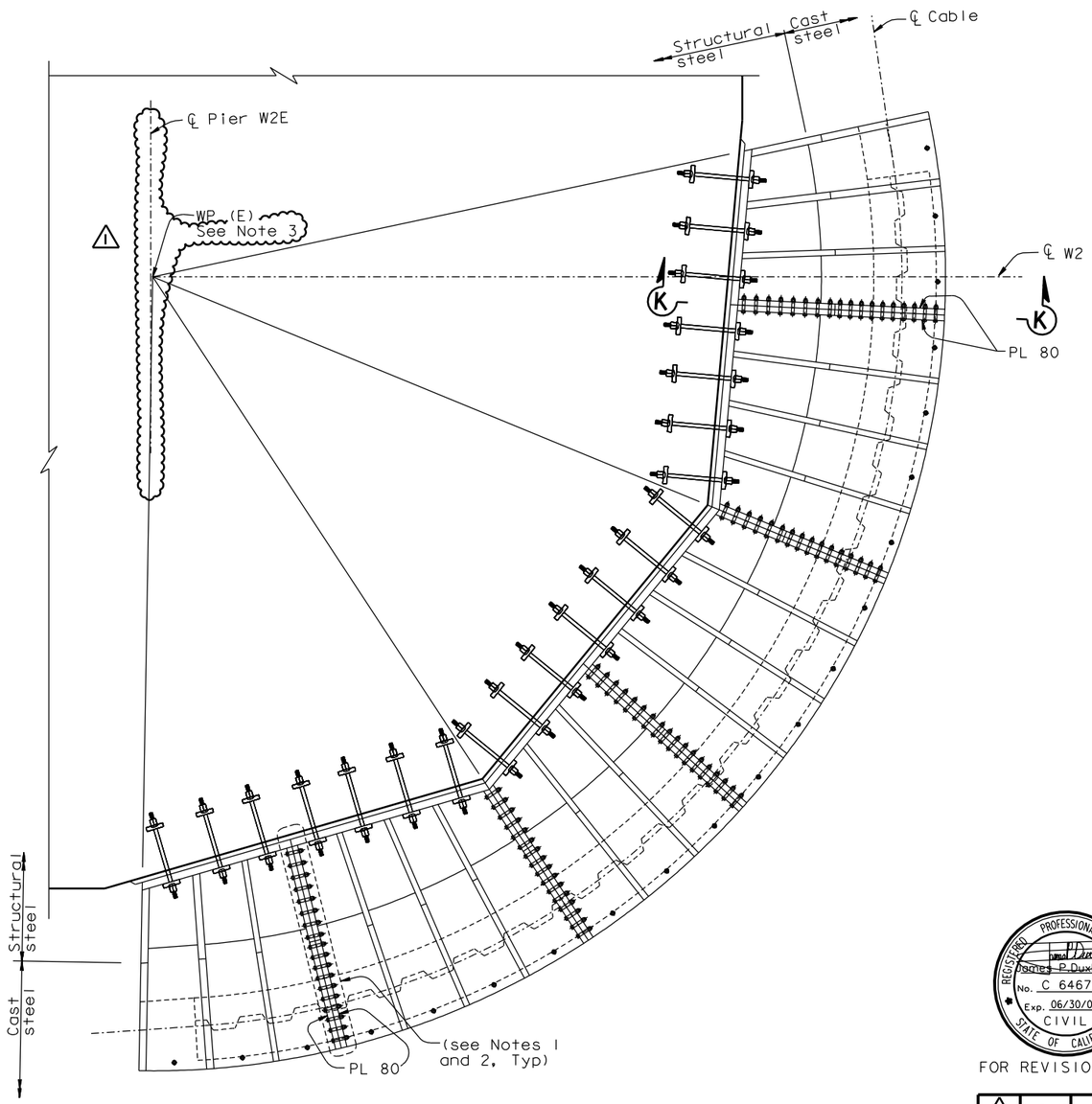

WEST DEVIATION SADDLE SPLICE ALTERNATE

PLAN VIEW (In the plan of the Deviation saddle)
1:40

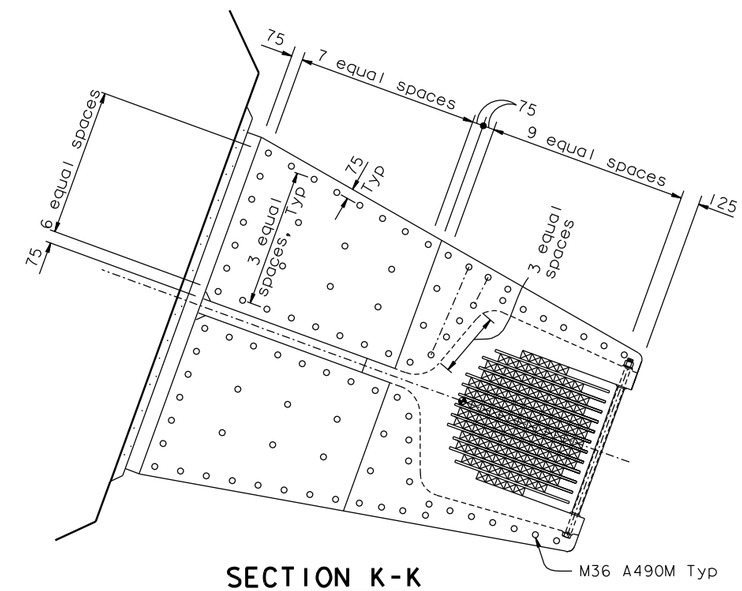

SECTION K-K

1:20
(Anchor rods not shown for clarity)

REGISTERED PROFESSIONAL ENGINEER James P. Duxbury No. C 64677 Exp. 06/30/07 CIVIL STATE OF CALIFORNIA

FOR REVISIONS ONLY

MARK	DATE	DESCRIPTIONS	BY	CH'D	CCO#
1	01/31/07	WEST DEVIATION SADDLE GEOMETRY	NV	JD	15

REVISIONS

CONTRACT CHANGE ORDER NO. ____
SHEET ___ OF ___

NOTES:

1. West deviation saddle segments shall be bolted together prior to tightening anchor rods.
2. In the bolted splices the flatness of the faying surfaces shall be +0.5 mm per meter, and the gap between them shall not exceed 0.5 mm per meter. The perimeters of faying surfaces shall be caulked.
3. (1) WP(E) and WP(W) do not coincide with ℄ of Pier W2, ℄ Pier W2E nor ℄ Pier W2W.

ALL DIMENSIONS ARE IN MILLIMETERS UNLESS OTHERWISE SHOWN

R. Valizadeh/V. Toan/Y.L./W.L./F.C.
DESIGN OVERSIGHT
SIGN OFF DATE 01/31/07

	BY	CHECKED
DESIGN	J. Sun	T. McMeans
DETAILS	J. Duxbury	T. McMeans
QUANTITIES	J. Duxbury	S. Shi

PREPARED FOR THE STATE OF CALIFORNIA DEPARTMENT OF TRANSPORTATION

R. Manzanarez
PROJECT ENGINEER

BRIDGE NO. 34-0006L/R
KILOMETER POST 13.2/13.9

SAN FRANCISCO OAKLAND BAY BRIDGE
EAST SPAN SEISMIC SAFETY PROJECT
SELF-ANCHORED SUSPENSION BRIDGE
(SUPERSTRUCTURE & TOWER)

WEST DEVIATION SADDLE DETAILS NO. 5

Rev. Date: 5-18-98

ORIGINAL SCALE IN MILLIMETERS FOR REDUCED PLANS 0 10 20 30 40 50 60 70 80 90 100

CU 04
EA 0120F1

DISREGARD PRINTS BEARING EARLIER REVISION DATES

REVISION DATES (PRELIMINARY STAGE ONLY) 01/27/04 09/08/04 12/07/05

SHEET 352R1 OF

FILE => I:\bb\04-01200\sas\contract plans and cco\cco\in progress\cco#15\agsdd05.dgn

100 % PS&E

USERNAME => vignatovsky DATE PLOTTED => 15 MAR 2007 TIME PLOTTED => 15:39:03

DIST.	COUNTY	ROUTE	KILOMETER POST TOTAL PROJECT	SHEET NO.	TOTAL SHEETS
04	SF	80	13.2/13.9	791R1	1204

Caltrans Metric

REGISTERED ENGINEER - CIVIL

12-6-04
PLANS APPROVAL DATE

REGISTERED PROFESSIONAL ENGINEER John Sun No. C 54648 Exp. 12/31/05 CIVIL STATE OF CALIFORNIA

The State of California or its officers or agents shall not be responsible for the accuracy or completeness of electronic copies of this plan sheet.

REGISTERED PROFESSIONAL ENGINEER James P. Duxbury No. C 64677 Exp. 06/30/07 CIVIL STATE OF CALIFORNIA

FOR REVISIONS ONLY

T.Y. LIN / MOFFATT & NICHOL
825 BATTERY STREET
SAN FRANCISCO, CA 94111

Caltrans now has a web site! To get to the web site, go to: http://www.dot.ca.gov

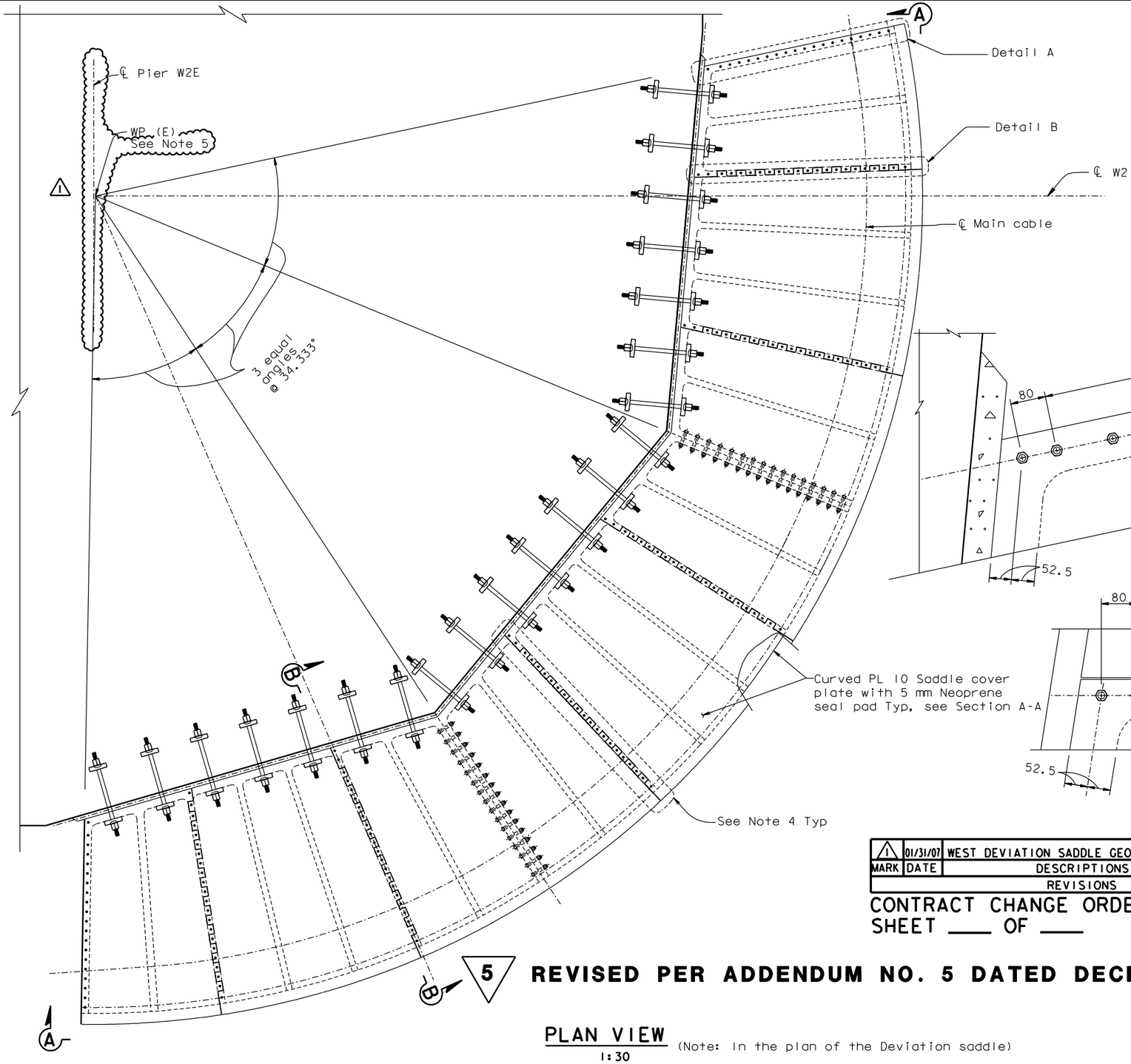

5

PLAN VIEW
1:30

(Note: In the plan of the Deviation saddle)

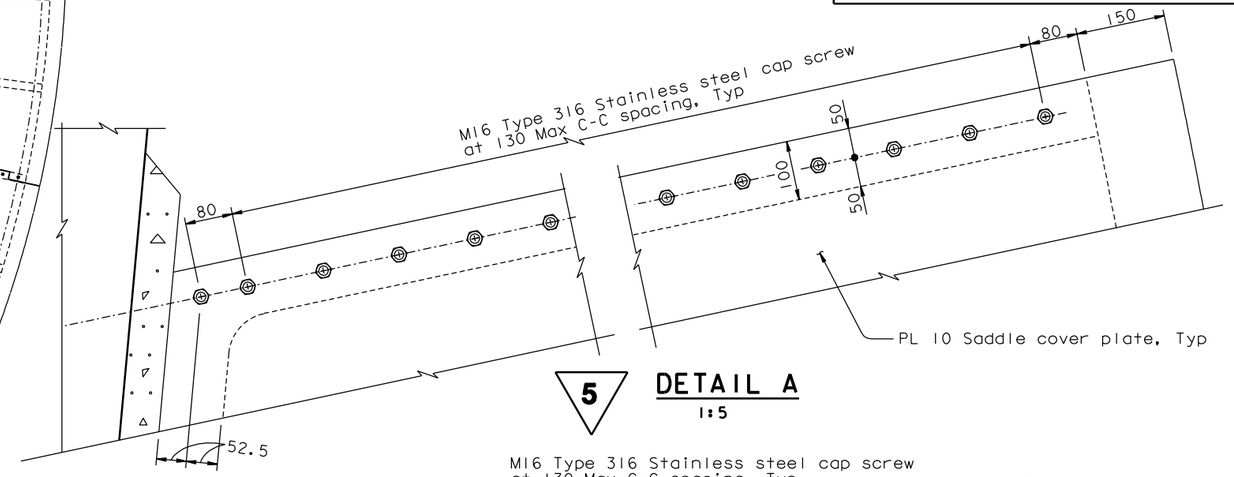

5

DETAIL A
1:5

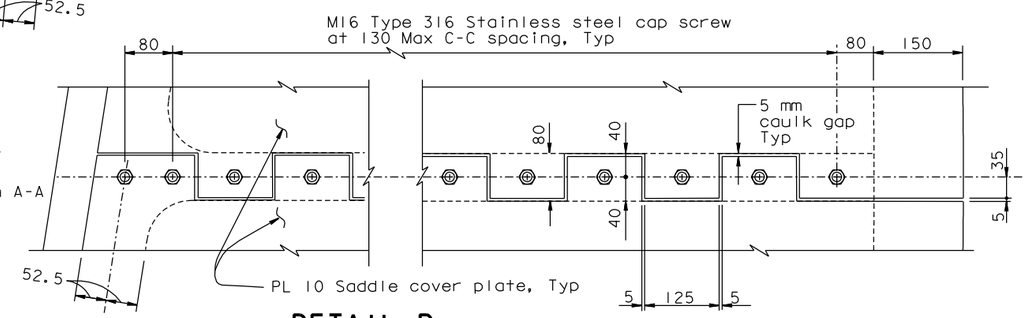

DETAIL B
1:5

MARK	DATE	DESCRIPTIONS	BY	CH'D	CCO#
1	01/31/07	WEST DEVIATION SADDLE GEOMETRY	PC	JD	15

REVISIONS

CONTRACT CHANGE ORDER NO. _____
SHEET ____ OF ____

NOTES:

1. For additional details, see "West Deviation Saddle Details" sheets.
2. For Section A-A and Section B-B, see "West Deviation Saddle Housing Details No.2" sheet.
3. All plate shall be ASTM A709M Grade 345, unless specified otherwise.
4. If the Contractor elects to use the West Deviation Saddle Splice Alternate, the joint between the saddle cover plates shall not coincide with saddle splice.
5. WP(E) and WP(W) do not coincide with ℄ of Pier W2, ℄ Pier W2E nor ℄ Pier W2W.

5 **REVISED PER ADDENDUM NO. 5 DATED DECEMBER 21, 2005**

ALL DIMENSIONS ARE IN MILLIMETERS UNLESS OTHERWISE SHOWN

100 % PS&E

USERNAME => vignotovs DATE PLOTTED => 15 MAR 2007 TIME PLOTTED => 15:40:08

R. Valizadeh/V. Toan/Y.L./W.L./F.C.
DESIGN OVERSIGHT
Reza Valizadeh / Vong Toan / Y. Liu
SIGN OFF DATE 01/31/07

	BY	CHECKED
DESIGN	J. Sun	T. McMeans
DETAILS	J. Duxbury	T. McMeans
QUANTITIES	J. Duxbury	S. Shi

PREPARED FOR THE STATE OF CALIFORNIA DEPARTMENT OF TRANSPORTATION

R. Manzanarez
PROJECT ENGINEER

BRIDGE NO. 34-0006L/R
KILOMETER POST 13.2/13.9

SAN FRANCISCO OAKLAND BAY BRIDGE
EAST SPAN SEISMIC SAFETY PROJECT
SELF-ANCHORED SUSPENSION BRIDGE
(SUPERSTRUCTURE & TOWER)

WEST DEVIATION SADDLE HOUSING DETAILS NO. 1

Rev. Date: 5-18-98

ORIGINAL SCALE IN MILLIMETERS FOR REDUCED PLANS 0 10 20 30 40 50 60 70 80 90 100

CU 04
EA 0120F1

DISREGARD PRINTS BEARING EARLIER REVISION DATES

REVISION DATES (PRELIMINARY STAGE ONLY) 05/15/99 08/02/99 05/31/01 04/08/02 07/01/02 12/13/02 09/08/04 12/07/05

SHEET 374R1 OF

FILE => I:\bb\04-012001\sas\contract plans and cco\cco\in progress\cco#15\agshd01.dgn

DIST.	COUNTY	ROUTE	KILOMETER POST TOTAL PROJECT	SHEET NO.	TOTAL SHEETS
04	SF	80	13.2/13.9	842R1	1204

REGISTERED ENGINEER - CIVIL

1-27-03
PLANS APPROVAL DATE

REGISTERED PROFESSIONAL ENGINEER John Sun No. C 54648 Exp. 12/31/05 CIVIL STATE OF CALIFORNIA

The State of California or its officers or agents shall not be responsible for the accuracy or completeness of electronic copies of this plan sheet.

T.Y. LIN / MOFFATT & NICHOL
825 BATTERY STREET
SAN FRANCISCO, CA 94111

To get to the web site, go to: http://www.dot.ca.gov

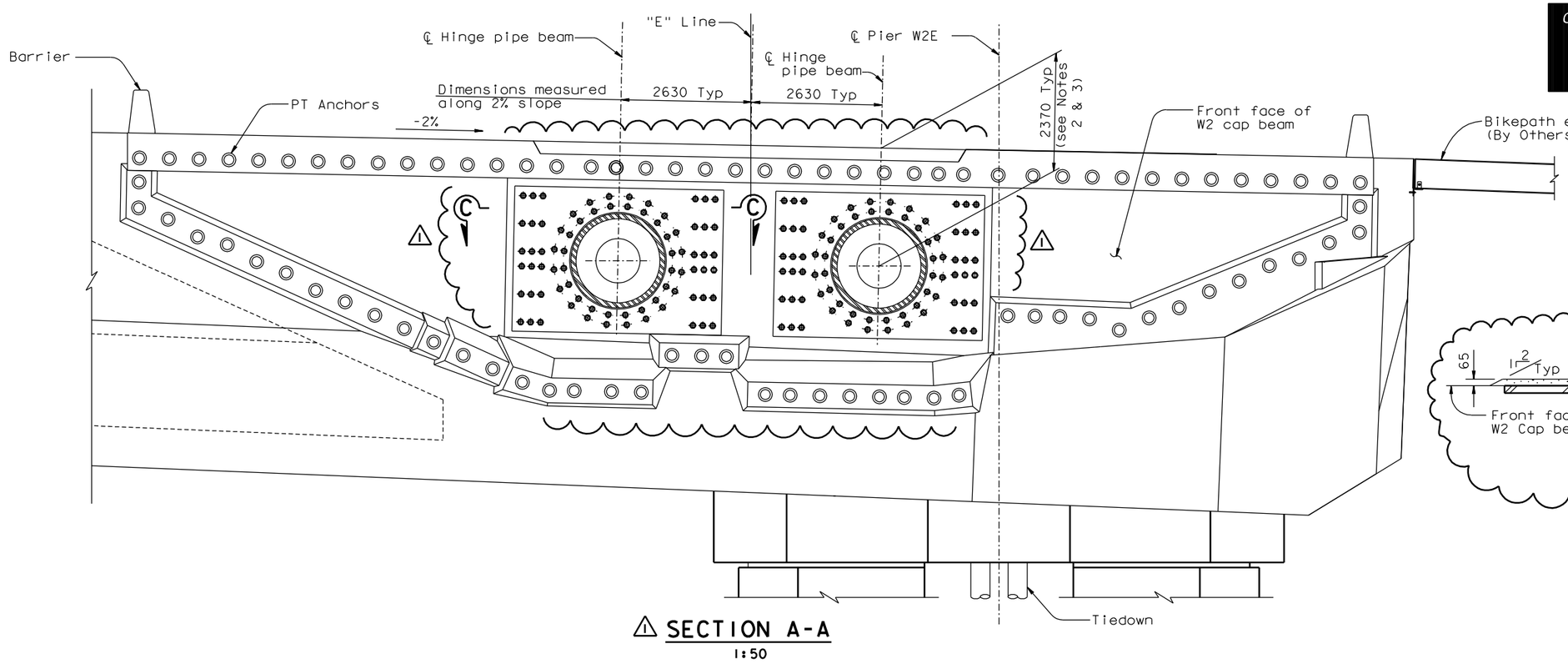

1 SECTION A-A
1:50

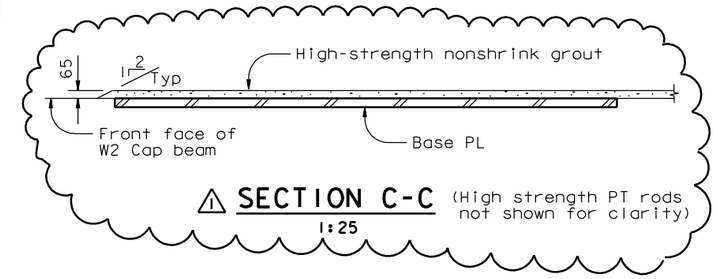

1 SECTION C-C (High strength PT rods not shown for clarity)
1:25

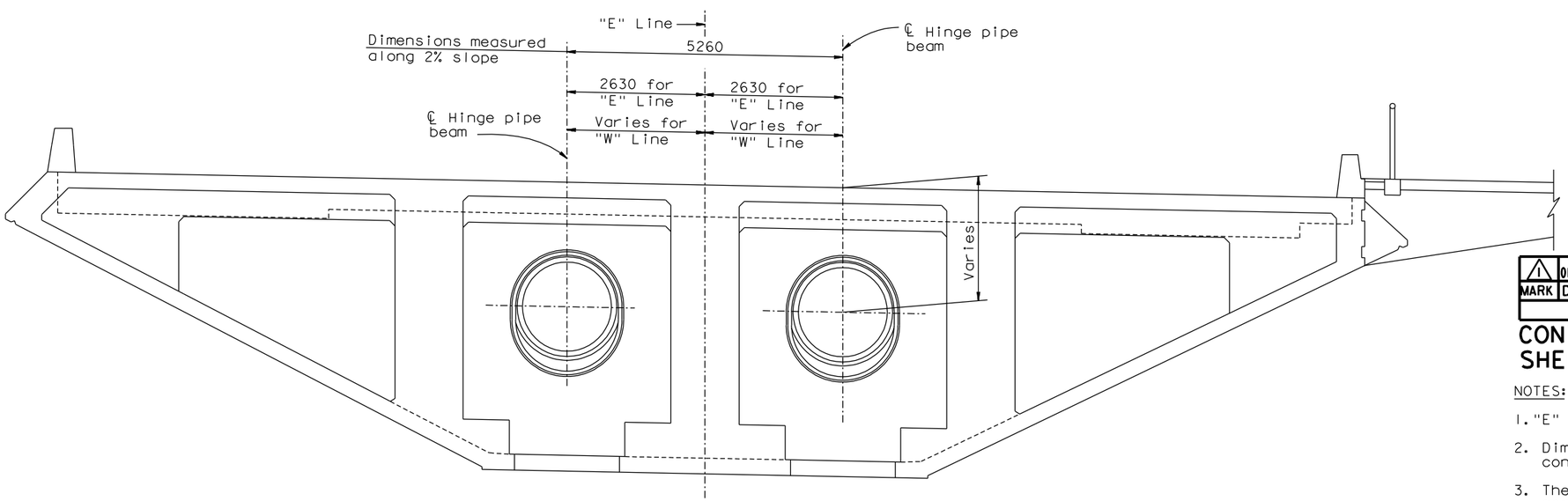

SECTION B-B
1:50

REGISTERED PROFESSIONAL ENGINEER Marwan N. Nader No. C 054426 Exp. 12/31/07 CIVIL STATE OF CALIFORNIA

FOR REVISIONS ONLY

MARK	DATE	DESCRIPTIONS	BY	CH'D	CCO#
1	01/31/07	HINGE K PIPE BEAM BLOCKOUTS	MN	NV	15

REVISIONS

CONTRACT CHANGE ORDER NO. _____
SHEET ___ OF ___

NOTES:

1. "E" Line shown, "W" Line similar.
2. Dimensions shown are with respect to finished concrete surface.
3. The centerline of the hinge pipe beams are perpendicular to the face of W2 cap beam.

ALL DIMENSIONS ARE IN MILLIMETERS UNLESS OTHERWISE SHOWN

R. Valizadeh/V. Toan/Y.L./W.L./F.C.
DESIGN OVERSIGHT
SIGN OFF DATE 01/31/07

DESIGN	BY J. Sun	CHECKED M. Nader	
DETAILS	BY J. Duxbury	CHECKED C. Mibelli	
QUANTITIES	BY J. Duxbury	CHECKED C. Mibelli	

PREPARED FOR THE STATE OF CALIFORNIA DEPARTMENT OF TRANSPORTATION

R. Manzanarez
PROJECT ENGINEER

BRIDGE NO. 34-0006L/R
KILOMETER POST 13.2/13.9

SAN FRANCISCO OAKLAND BAY BRIDGE
EAST SPAN SEISMIC SAFETY PROJECT
SELF-ANCHORED SUSPENSION BRIDGE
(SUPERSTRUCTURE & TOWER)

HINGE K LAYOUT NO. 2

Rev. Date: 5-18-98

ORIGINAL SCALE IN MILLIMETERS FOR REDUCED PLANS 0 10 20 30 40 50 60 70 80 90 100

CU 04
EA 0120F1

DISREGARD PRINTS BEARING EARLIER REVISION DATES

REVISION DATES (PRELIMINARY STAGE ONLY) 04/08/02 07/09/02 12/19/02

SHEET 425R1 OF

FILE => I:\bb\04-012001\sas\contract plans and cco\cco\in progress\cco#15\ahhk102.dgn

100% PS&E

USERNAME => vignatovsk DATE PLOTTED => 15 MAR 2007 TIME PLOTTED => 15:41:59

DIST.	COUNTY	ROUTE	KILOMETER POST TOTAL PROJECT	SHEET NO.	TOTAL SHEETS
04	SF	80	13.2/13.9	843R1	1204

Caltrans Metric

REGISTERED ENGINEER - CIVIL

12-6-04
PLANS APPROVAL DATE

REGISTERED PROFESSIONAL ENGINEER John Sun No. C 54648 Exp. 12/31/05 CIVIL STATE OF CALIFORNIA

The State of California or its officers or agents shall not be responsible for the accuracy or completeness of electronic copies of this plan sheet.

T.Y. LIN / MOFFATT & NICHOL
825 BATTERY STREET
SAN FRANCISCO, CA 94111

To get to the web site, go to: http://www.dot.ca.gov

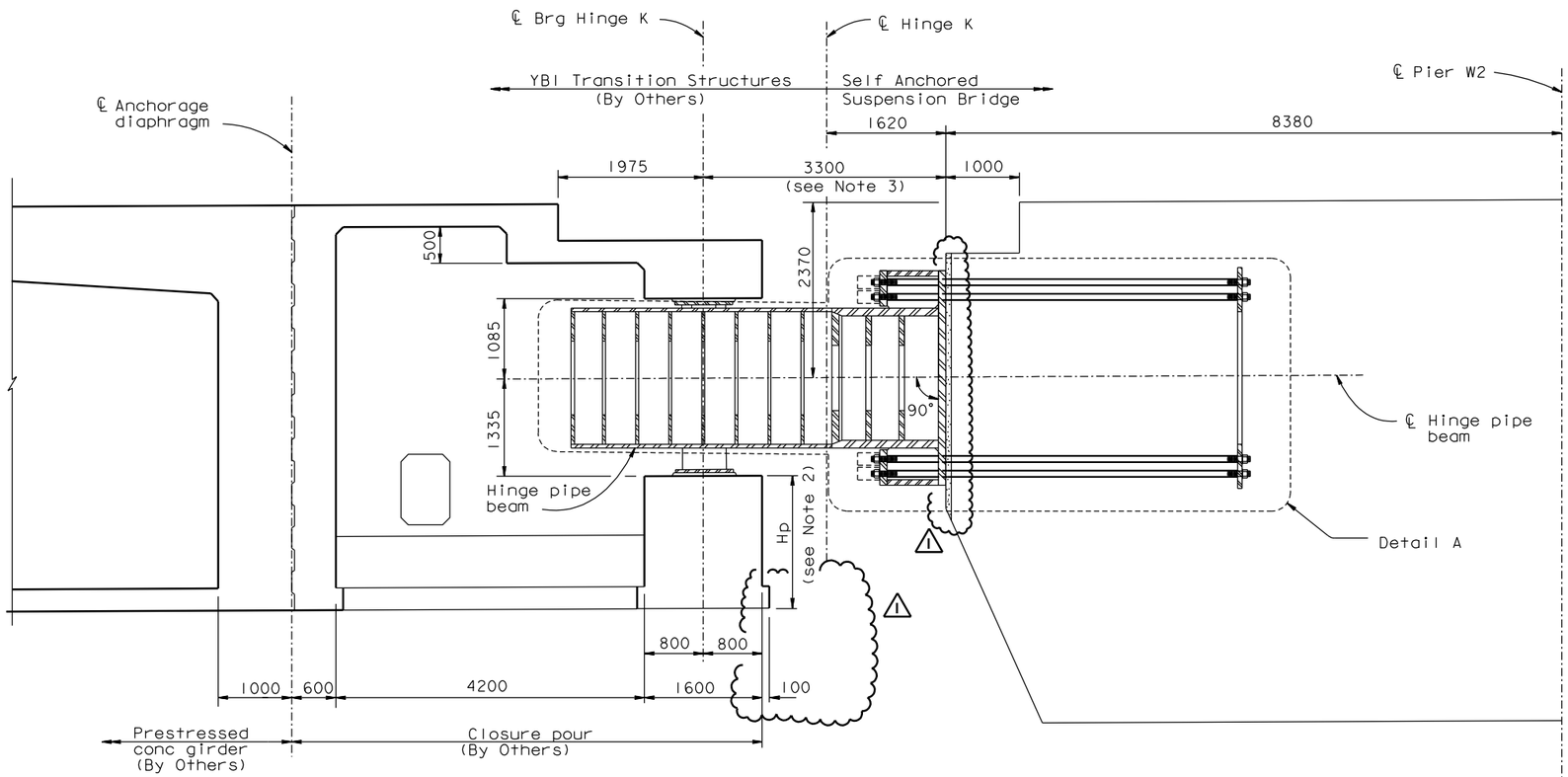

SECTION C-C

1:40

REGISTERED PROFESSIONAL ENGINEER Marwan N. Nader No. C 054426 Exp. 12/31/07 CIVIL STATE OF CALIFORNIA

FOR REVISIONS ONLY

MARK	DATE	DESCRIPTIONS	BY	CH'D	CCO#
1	01/31/07	HINGE K PIPE BEAM BLOCKOUTS	MN	NV	15

REVISIONS

CONTRACT CHANGE ORDER NO. _____
SHEET ____ OF ____

NOTES:

1. For Detail A, see "Hinge K Details No.1" sheet.
2. Bearing pedestal height (Hp), varies for each hinge pipe location.
3. Values are for mean temperature of 20°C and no creep and shrinkage.

100 % PS&E

USERNAME => vignatovs DATE PLOTTED => 16 MAR 2007 TIME PLOTTED => 07:23:44

ALL DIMENSIONS ARE IN MILLIMETERS UNLESS OTHERWISE SHOWN

SAN FRANCISCO OAKLAND BAY BRIDGE
EAST SPAN SEISMIC SAFETY PROJECT
SELF-ANCHORED SUSPENSION BRIDGE (SUPERSTRUCTURE & TOWER)

HINGE K LAYOUT NO. 3

R. Valizadeh/V. Toan/Y.L./W.L./F.C.
DESIGN OVERSIGHT
Roya Valizadeh / Vong Toan / Y. Liu
SIGN OFF DATE 01/31/07

	BY	CHECKED
DESIGN	J. Sun	C. Redfield
DETAILS	J. Duxbury	C. Mibelli
QUANTITIES	J. Duxbury	S. Shi

PREPARED FOR THE STATE OF CALIFORNIA DEPARTMENT OF TRANSPORTATION

R. Manzanarez
PROJECT ENGINEER

BRIDGE NO. 34-0006L/R
KILOMETER POST 13.2/13.9

CU 04
EA 0120F1

Rev. Date: 5-18-98

ORIGINAL SCALE IN MILLIMETERS FOR REDUCED PLANS 0 10 20 30 40 50 60 70 80 90 100

DISREGARD PRINTS BEARING EARLIER REVISION DATES

REVISION DATES (PRELIMINARY STAGE ONLY): 04/08/02 07/07/02 12/18/02 12/16/05

SHEET 426R1 OF

FILE => I:\bb\04-012001\sas\contract plans and cco\cco\in progress\cco#15\ahhk103.dgn

DIST.	COUNTY	ROUTE	KILOMETER POST TOTAL PROJECT	SHEET NO.	TOTAL SHEETS
04	SF	80	13.2/13.9	844R1	1204

5

Caltrans Metric

REGISTERED ENGINEER - CIVIL

12-6-04
PLANS APPROVAL DATE

REGISTERED PROFESSIONAL ENGINEER John Sun No. C 54648 Exp. 12/31/05 CIVIL STATE OF CALIFORNIA

The State of California or its officers or agents shall not be responsible for the accuracy or completeness of electronic copies of this plan sheet.

T.Y. LIN / MOFFATT & NICHOL
825 BATTERY STREET
SAN FRANCISCO, CA 94111

Caltrans now has a web site! To get to the web site, go to: http://www.dot.ca.gov

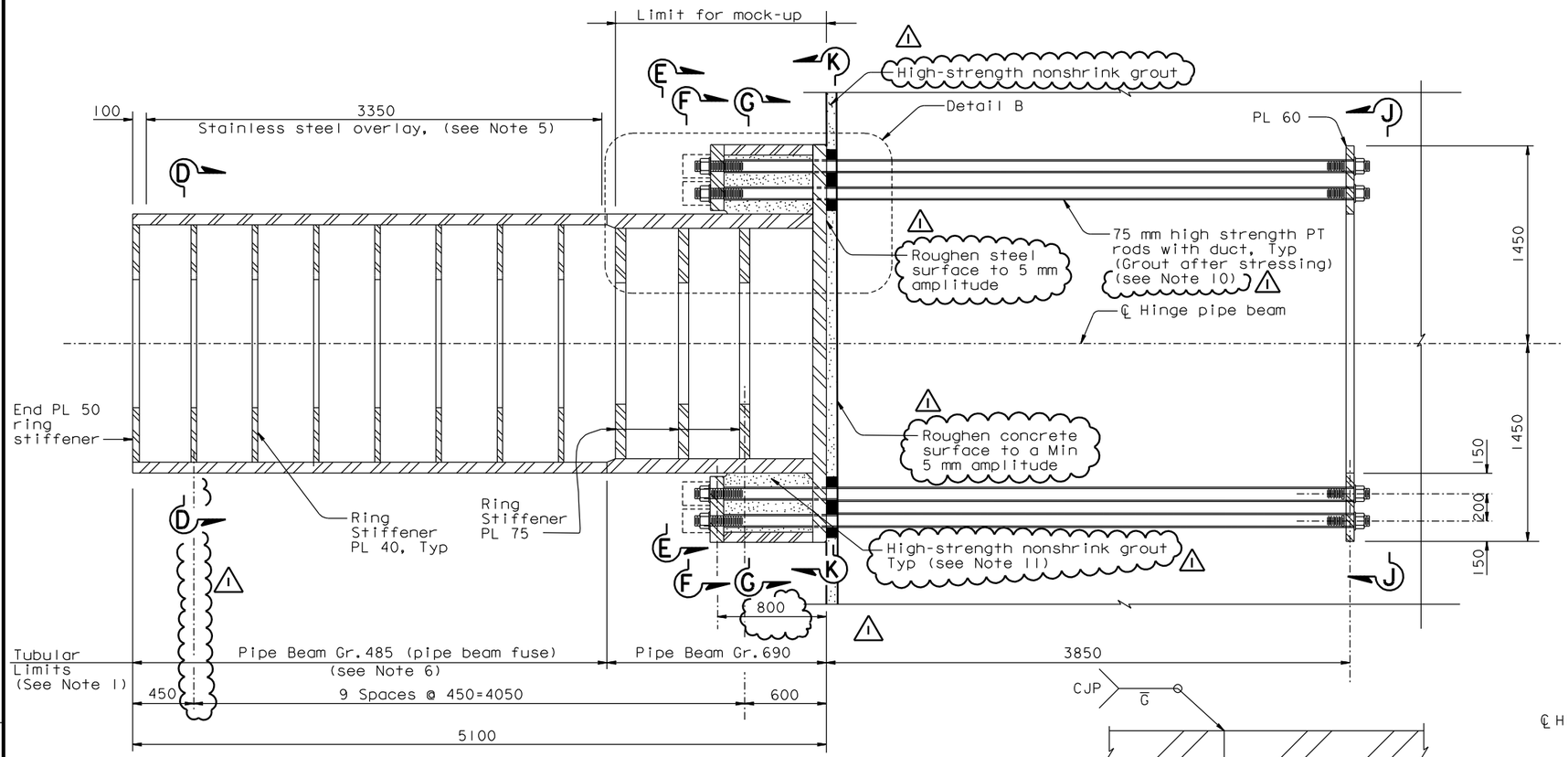

DETAIL A
1:20

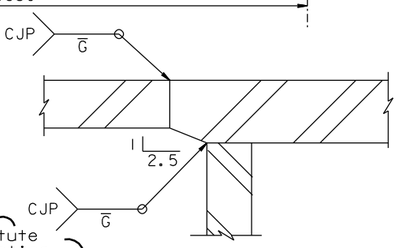

DETAIL C
1:5

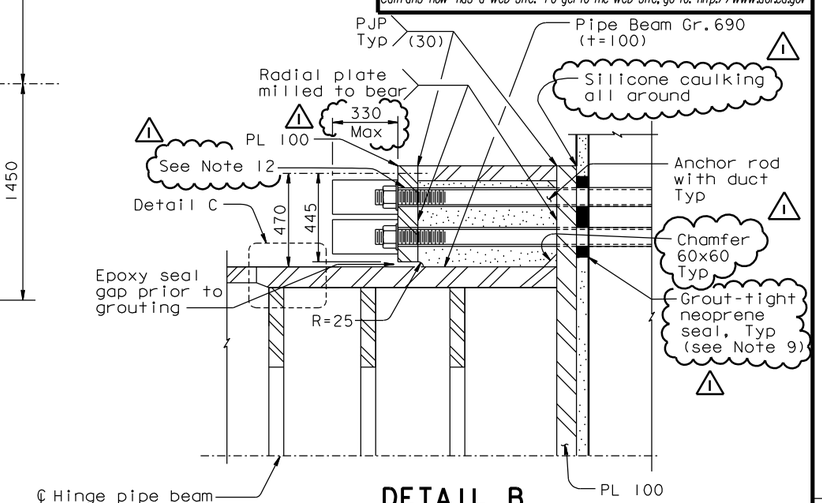

DETAIL B
1:15

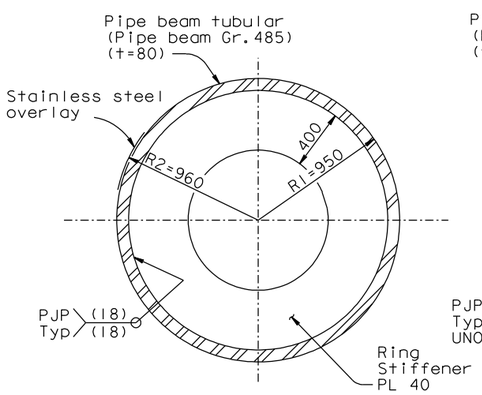

SECTION D-D
1:20

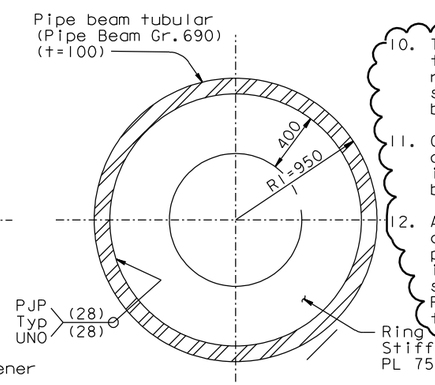

SECTION E-E
1:20

10. The Contractor may substitute the PT duct with a PT Supplier recommended debonding tape, subject to review and approval by the Engineer.

11. Contractor shall grout the interior cells of the pipe beam anchorage if PT duct substitution is approved by the Engineer.

12. At the Contractor's option, a 96 max diameter oversized hole may be used provided a 25 min thick plate washer is also used. Plate washer shall have silicone caulking around the perimeter. Post-tension cap shall be attached to the seal plate washer.

NOTES:

1. Pipe Beam tubulars shall be forgings. Hinge beam ring stiffener plate, stiffener plates and anchorage plates shall be pipe beam Gr. 485, UNO.

2. Hinge beam shall be SPCM.

3. For Section F-F through K-K, see "Hinge K Details No. 2" sheet.

4. Steel hinge beam PT anchor rods are 75 mm high strength PT rods (fu=1030 Mpa) with standard galvanized steel ducts, unless specified otherwise. For additional prestressing details, see "Prestressing Notes" sheet, and for general stressing sequence, see "Pier W2 Construction Sequence" sheet.

5. The areas noted as stainless stell overlay shall be 316L weld overlay. The area shall be machine finished to within 1 mm of the 960 theoretical radius with a surface finish of 3 μm. The minimum final thickness of the stainless steel overlay shall be 5 mm.

6. Total of 4 spare beam fuses (including stiffeners) for hinges KW and KE shall be fabricated with a minimum overall length of 3513 mm. Spare pipe beams to replace the fuse sections in case of damage due to earthquake in the future (By Others).

7. Jacking force in the steel hinge beam PT anchor rods (HB1-HB76) shall be 3000 kN typical.

8. Welds between interior ring stiffnener plates and tubulars may be undermatched by one strength level.

9. Grout-tight neoprene seal shown is schematic. The seal shall prevent any grout from seeping through the PT rod holes in the base plate. Area around the hole perimeter shall be ground smooth to produce a tight seal.

REGISTERED PROFESSIONAL ENGINEER Marwan N. Nader No. C 054426 Exp. 12/31/07 CIVIL STATE OF CALIFORNIA

FOR REVISIONS ONLY

MARK	DATE	DESCRIPTIONS	BY	CH'D	CCO#
1	01/31/07	HINGE K PIPE BEAM BLOCKOUTS	MN	NV	15

REVISIONS

CONTRACT CHANGE ORDER NO. ____
SHEET ___ OF ___

5 **REVISED PER ADDENDUM NO. 5 DATED DECEMBER 21, 2005**

ALL DIMENSIONS ARE IN MILLIMETERS UNLESS OTHERWISE SHOWN

100% PS&E

R. Valizadeh/V. Toan/Y.L./W.L./F.C.
DESIGN OVERSIGHT
Ryan Valizadeh / Vong Toan / Y. Liu
SIGN OFF DATE 01/31/07

DESIGN	BY J. Sun	CHECKED C. Redfield	
DETAILS	BY J. Duxbury	CHECKED M. Chen	
QUANTITIES	BY J. Duxbury	CHECKED S. Shi	

PREPARED FOR THE STATE OF CALIFORNIA DEPARTMENT OF TRANSPORTATION

R. Manzanarez
PROJECT ENGINEER

BRIDGE NO. 34-0006L/R
KILOMETER POST 13.2/13.9

CU 04
EA 0120F1

SAN FRANCISCO OAKLAND BAY BRIDGE EAST SPAN SEISMIC SAFETY PROJECT
SELF-ANCHORED SUSPENSION BRIDGE (SUPERSTRUCTURE & TOWER)
HINGE K DETAILS NO. 1

Rev. Date: 5-18-98

ORIGINAL SCALE IN MILLIMETERS FOR REDUCED PLANS 0 10 20 30 40 50 60 70 80 90 100

DISREGARD PRINTS BEARING EARLIER REVISION DATES

REVISION DATES (PRELIMINARY STAGE ONLY) 08/08/99 05/31/01 04/08/02 07/01/02 12/19/02 12/07/05

SHEET 427R1 OF

FILE => I:\bb\04-012001\sas\contract plans and cco\cco\in progress\cco#15\ahhng03k.dgn

USERNAME => vignatovsky DATE PLOTTED => 16 MAR 2007 TIME PLOTTED => 07:24:53

DIST.	COUNTY	ROUTE	KILOMETER POST TOTAL PROJECT	SHEET NO.	TOTAL SHEETS
04	SF	80	13.2/13.9	845R1	1204

Caltrans Metric

REGISTERED ENGINEER - CIVIL

12-6-04
PLANS APPROVAL DATE

REGISTERED PROFESSIONAL ENGINEER John Sun No. C 54648 Exp. 12/31/05 CIVIL STATE OF CALIFORNIA

The State of California or its officers or agents shall not be responsible for the accuracy or completeness of electronic copies of this plan sheet.

T.Y. LIN / MOFFATT & NICHOL
825 BATTERY STREET
SAN FRANCISCO, CA 94111

Caltrans now has a web site! To get to the web site, go to: http://www.dot.ca.gov

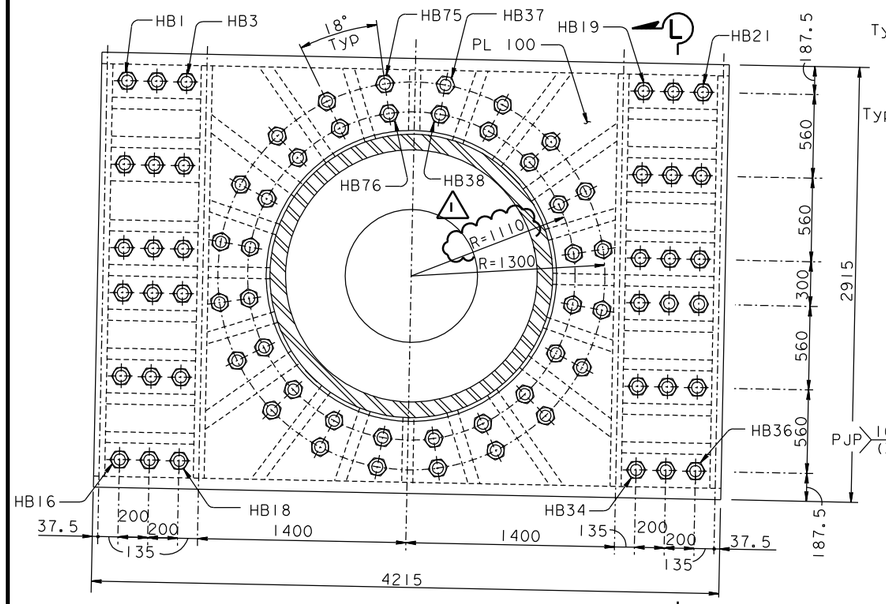

SECTION F-F
1:20
Note: Post-tension cap not shown for clarity

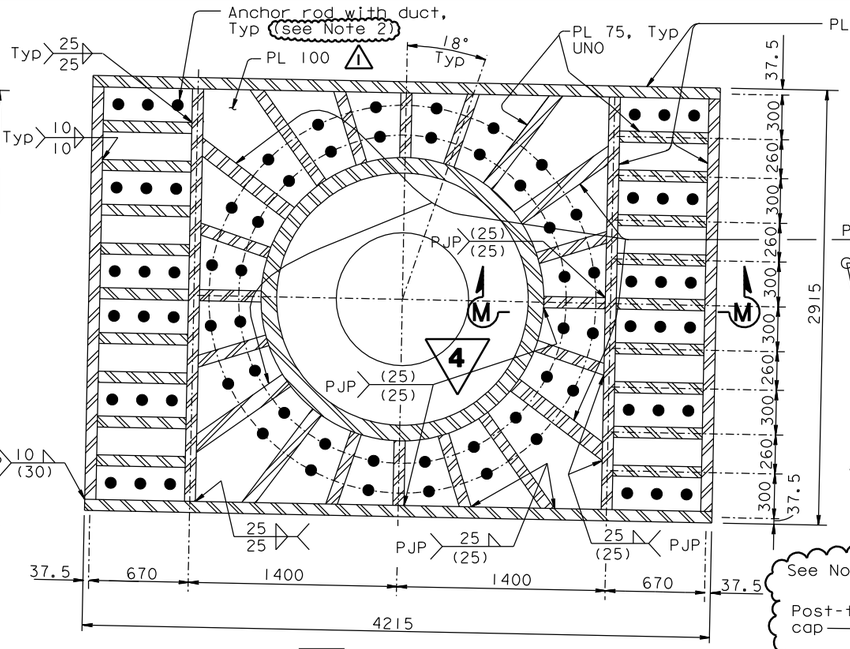

SECTION G-G
(Pipe beam anchorage) (see Note 3)
1:20
(Limit for mock up)

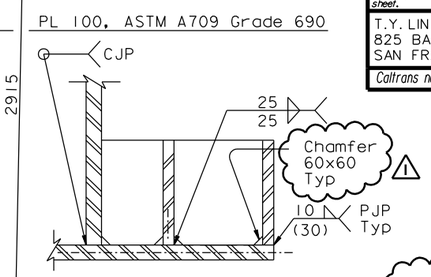

SECTION M-M
1:20

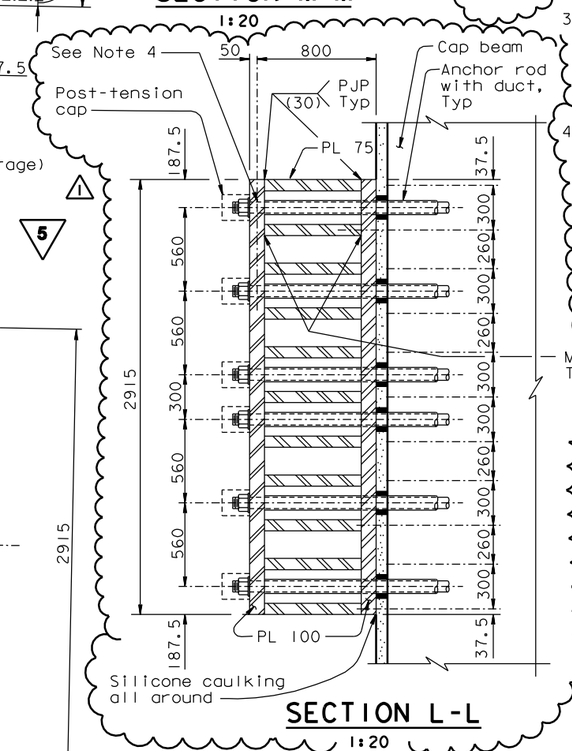

SECTION L-L
1:20

NOTES:

1. For additional details, see "Hinge K Details No. 1" sheet.
2. The Contractor may substitute the PT duct with a PT Supplier recommended debonding tape, subject to review and approval of the Engineer.
3. Contractor shall grout the interior cells of the pipe beam anchorage if PT duct substitution is approved by the Engineer.
4. At the Contractor's option, a 96 max diameter oversized hole may be used provided a 25 min thick plate washer is also used. Plate washer shall have silicone caulking around the perimeter. Post-tension cap shall be attached to the seal plate washer.

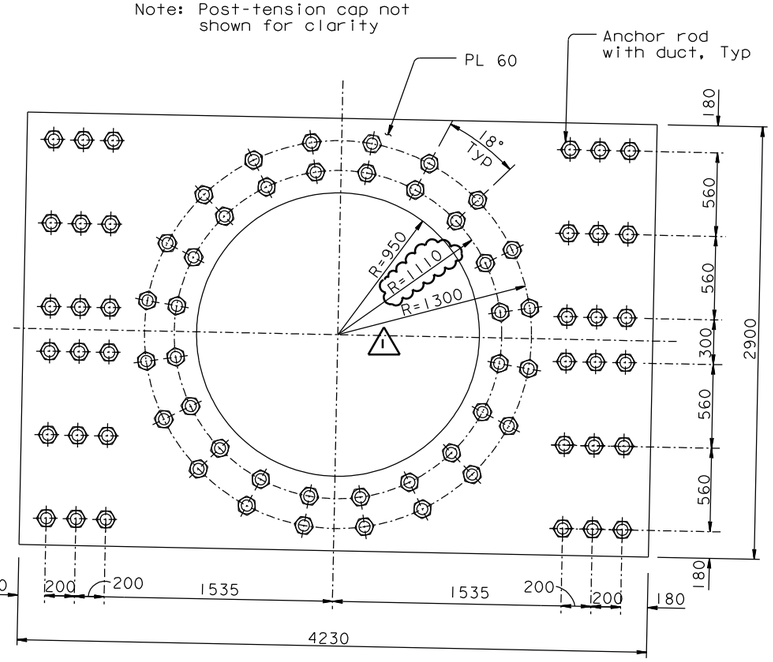

SECTION J-J
1:20
Note: Post-tension cap not shown for clarity

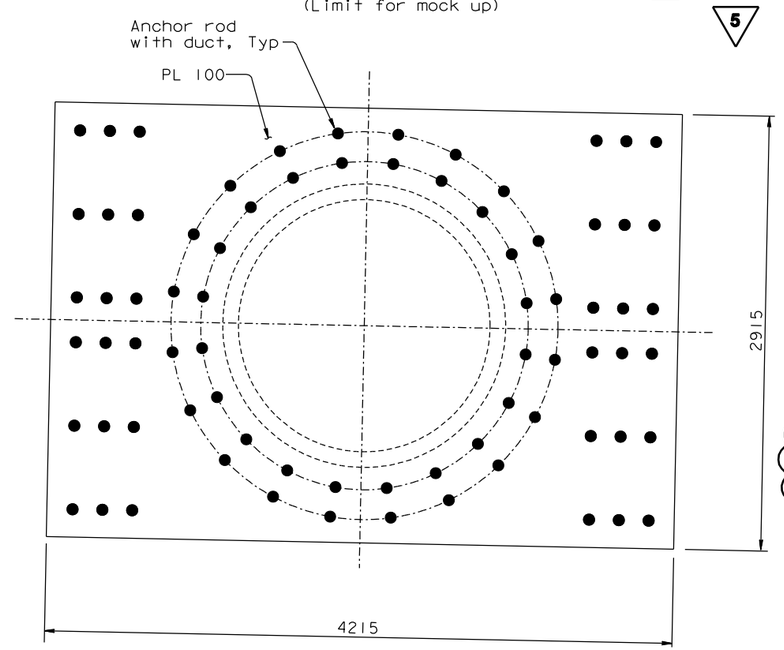

SECTION K-K
1:20

REGISTERED PROFESSIONAL ENGINEER Marwan N. Noder No. C 054426 Exp. 12/31/07 CIVIL STATE OF CALIFORNIA

FOR REVISIONS ONLY

MARK	DATE	DESCRIPTIONS	BY	CH'D	CCO#
1	01/31/07	HINGE K PIPE BEAM BLOCKOUTS	MN	NV	15

REVISIONS

CONTRACT CHANGE ORDER NO. ____
SHEET ___ OF ___

4 REVISED PER ADDENDUM NO. 4 DATED DECEMBER 9, 2005

5 REVISED PER ADDENDUM NO. 5 DATED DECEMBER 21, 2005

ALL DIMENSIONS ARE IN MILLIMETERS UNLESS OTHERWISE SHOWN

R. Valizadeh/V. Toan/Y.L./W.L./F.C.
DESIGN OVERSIGHT
Y. Lu
SIGN OFF DATE 01/31/07

	BY	CHECKED
DESIGN	J. Sun	C. Redfield
DETAILS	J. Duxbury	M. Chen
QUANTITIES	J. Duxbury	S. Shi

PREPARED FOR THE STATE OF CALIFORNIA DEPARTMENT OF TRANSPORTATION

R. Manzanarez
PROJECT ENGINEER

BRIDGE NO. 34-0006L/R
KILOMETER POST 13.2/13.9

SAN FRANCISCO OAKLAND BAY BRIDGE
EAST SPAN SEISMIC SAFETY PROJECT
SELF-ANCHORED SUSPENSION BRIDGE
(SUPERSTRUCTURE & TOWER)

HINGE K DETAILS NO. 2

Rev. Date: 5-18-98

ORIGINAL SCALE IN MILLIMETERS FOR REDUCED PLANS 0 10 20 30 40 50 60 70 80 90 100

CU 04
EA 0120F1

DISREGARD PRINTS BEARING EARLIER REVISION DATES

REVISION DATES (PRELIMINARY STAGE ONLY) 05/24/01 04/08/02 07/01/02 12/19/02 11/13/05

SHEET 428R1 OF

FILE => I:\bb\04-01200I\sas\contract plans and cco\cco\in progress\cco#15\ahhng04k.dgn

USERNAME => vignatovsk DATE PLOTTED => 16 MAR 2007 TIME PLOTTED => 07:26:52

100 % PS&E

DIST.	COUNTY	ROUTE	KILOMETER POST TOTAL PROJECT	SHEET NO.	TOTAL SHEETS
04	SF	80	13.2/13.9	913R1	1204

Caltrans Metric

REGISTERED ENGINEER - CIVIL

12-6-04
PLANS APPROVAL DATE

REGISTERED PROFESSIONAL ENGINEER Tien Hung Ho No. C 43990 Exp. 06/30/07 CIVIL STATE OF CALIFORNIA

The State of California or its officers or agents shall not be responsible for the accuracy or completeness of electronic copies of this plan sheet.

T.Y. LIN / MOFFATT & NICHOL
825 BATTERY STREET
SAN FRANCISCO, CA 94111

Caltrans now has a web site! To get to the web site, go to: http://www.dot.ca.gov

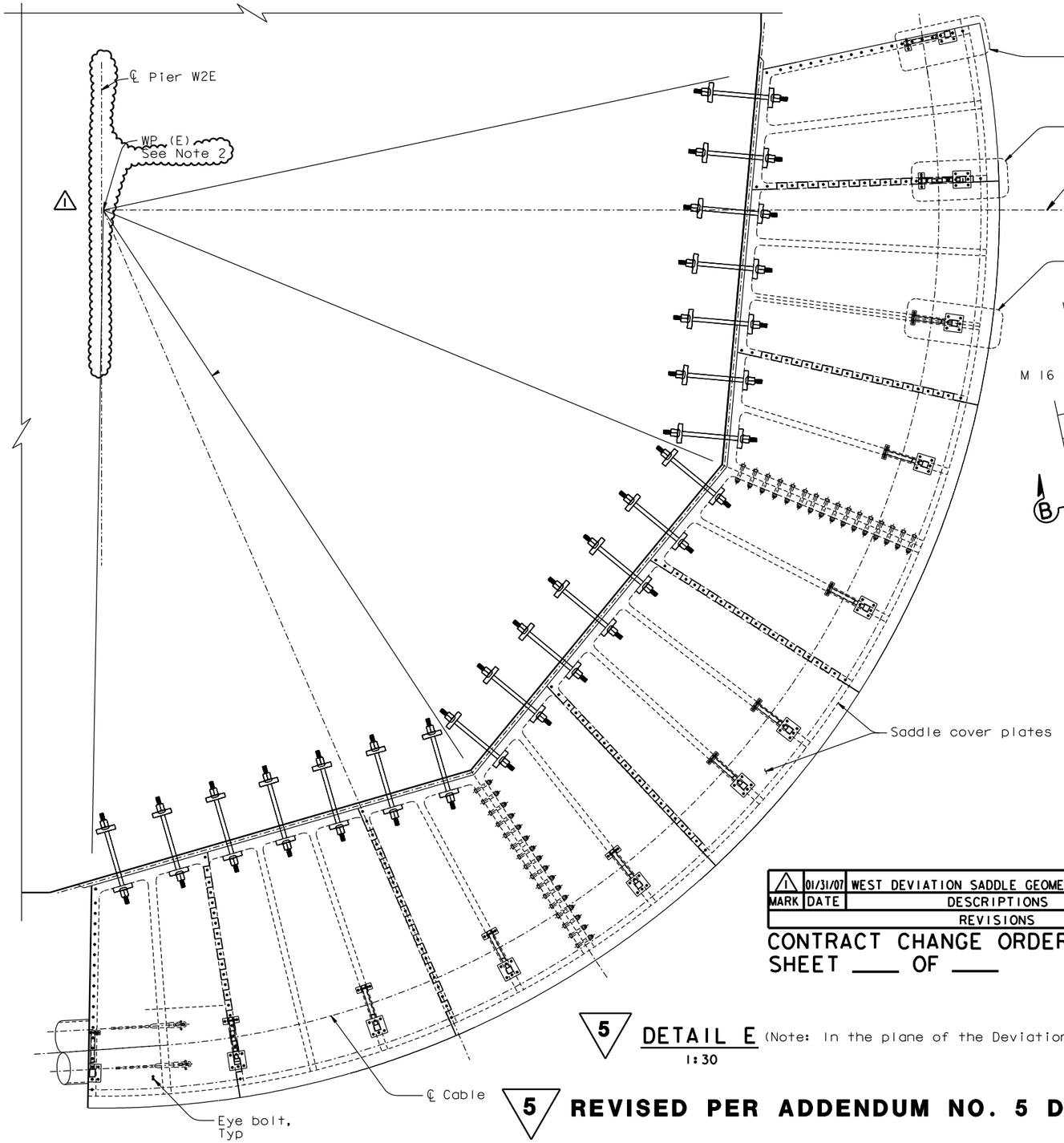

5 **DETAIL E** (Note: In the plane of the Deviation saddle)
1:30

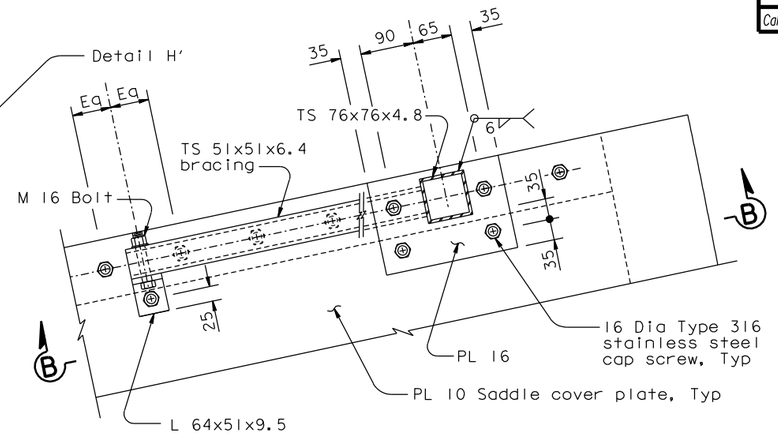

DETAIL G
1:5

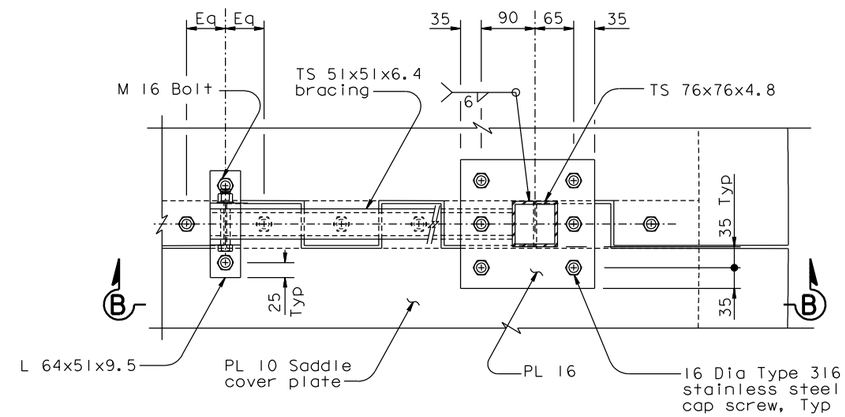

DETAIL H (Detail H' similar)
1:5

MARK	DATE	DESCRIPTIONS	BY	CH'D	CCO#
1	01/31/07	WEST DEVIATION SADDLE GEOMETRY	PC	TH	15

REVISIONS

CONTRACT CHANGE ORDER NO. _____
SHEET ____ OF ____

NOTES:

1. For Section B-B, see "West Anchorage Access Details No.5" sheet.
2. WP(E) and WP(W) do not coincide with ℄ of Pier W2, ℄ Pier W2E nor ℄ Pier W2W. 1

5 **REVISED PER ADDENDUM NO. 5 DATED DECEMBER 21, 2005**

100 % PS&E

ALL DIMENSIONS ARE IN MILLIMETERS UNLESS OTHERWISE SHOWN

R. Valizadeh/V. Toan/Y.L./W.L./F.C.
DESIGN OVERSIGHT
SIGN OFF DATE 01/31/07

	BY	CHECKED
DESIGN	T. Ho	N. Vo
DETAILS	J. Sun	N. Vo
QUANTITIES	T. Ho	N. Vo

PREPARED FOR THE STATE OF CALIFORNIA DEPARTMENT OF TRANSPORTATION

R. Manzanarez
PROJECT ENGINEER

CU 04
EA 0120F1

BRIDGE NO. 34-0006L/R
KILOMETER POST 13.2/13.9

SAN FRANCISCO OAKLAND BAY BRIDGE
EAST SPAN SEISMIC SAFETY PROJECT
SELF-ANCHORED SUSPENSION BRIDGE
(SUPERSTRUCTURE & TOWER)

WEST ANCHORAGE ACCESS DETAILS NO. 4

DISREGARD PRINTS BEARING EARLIER REVISION DATES: 05/31/01, 04/08/02, 01/01/02, 12/19/02, 09/08/04, 12/07/05

SHEET 496R1 OF

Rev. Date: 5-18-98

ORIGINAL SCALE IN MILLIMETERS FOR REDUCED PLANS 0 10 20 30 40 50 60 70 80 90 100

FILE => I:\bb\04-012001\sas\contract plans and cco\cco\in progress\cco#15\akacc02f.dgn

USERNAME => vignatovs DATE PLOTTED => 16 MAR 2007 TIME PLOTTED => 07:27:56

DIST.	COUNTY	ROUTE	KILOMETER POST TOTAL PROJECT	SHEET NO.	TOTAL SHEETS
04	SF	80	13.2/13.9	980R1	1204

Caltrans Metric

REGISTERED ENGINEER - CIVIL

12-6-04

PLANS APPROVAL DATE

REGISTERED PROFESSIONAL ENGINEER John Sun No. C 54648 Exp. 12/31/05 CIVIL STATE OF CALIFORNIA

The State of California or its officers or agents shall not be responsible for the accuracy or completeness of electronic copies of this plan sheet.

T.Y. LIN / MOFFATT & NICHOL
825 BATTERY STREET
SAN FRANCISCO, CA 94111

To get to the web site, go to: http://www.dot.ca.gov

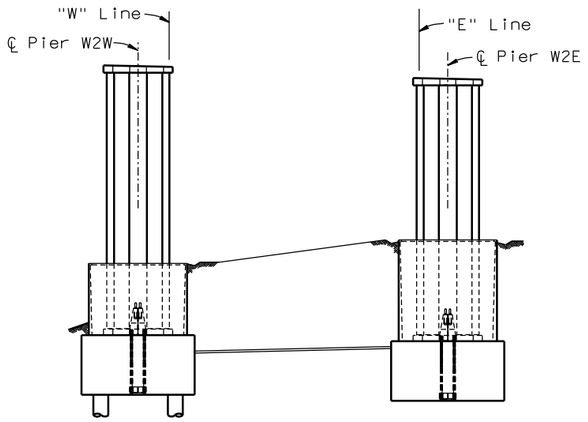

Step 1 (By Others)

1. Construct pier W2 foundation, cable tie-down anchorage, piers, retaining walls, backfill and stress footing PT rods to specified design force.

REGISTERED PROFESSIONAL ENGINEER Marwan N. Nader No. C 054426 Exp. 12/31/07 CIVIL STATE OF CALIFORNIA

FOR REVISIONS ONLY

MARK	DATE	DESCRIPTIONS	BY	CH'D	CCO#
1	01/31/07	HINGE K PIPE BEAM BLOCKOUTS	MN	NV	15

REVISIONS

CONTRACT CHANGE ORDER NO. ____
SHEET ___ OF ___

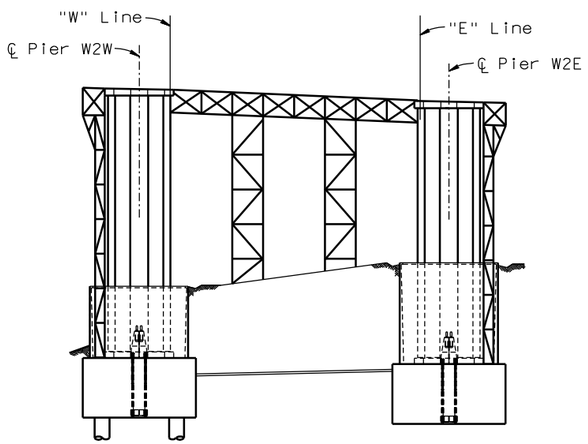

Step 2

1. Erect shoring and falsework for W2 cap beam construction.
2. Place cap beam reinforcement cages, PT ducts and other structural attachments.

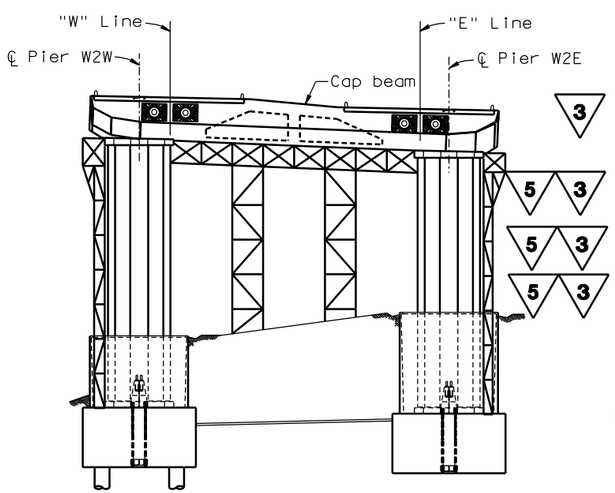

Step 3

1. Pour cap beam concrete with Hinge K pipe beams in-place.
2. Stress Cap Beam Transverse tendons CBT11-CBT36.
3. Install West Deviation Saddle.
4. Stress Hinge K Beam PT rods HB1-HB76, and VB1-VB126.
5. Remove shoring.
6. Stress vertical tendons VT1-VT16.

3 **REVISED PER ADDENDUM NO. 3 DATED NOVEMBER 7, 2005**

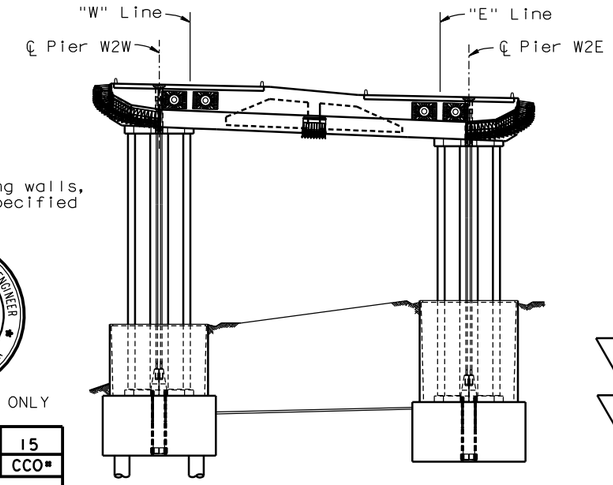

Step 4

3 1. Install tie-down stay cables and stress specified design force.

3 2. Install Jacking Saddle.

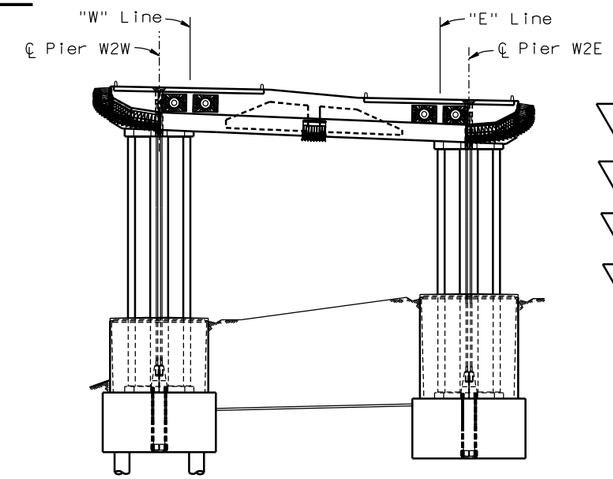

Step 5

3 1. Secure main span deck end segment and pour main span deck closure joint at cap beam.

3 2. Stress the deck cap beam continuity tendons 1A-42A, 1B-42B, 43 and 44.

3 3. Stress cap beam transverse tendons CBT2, CBT3, CBT6 and CBT7 after cable erection is complete.

3 4. Stress cap beam transverse tendons CBT9 and CBT10 after cable jacking is complete.

3 5. Stress cap beam transverse tendons CBT1, CBT4, CBT5 and CBT8 after deck erection is complete.

5 **REVISED PER ADDENDUM NO. 5 DATED DECEMBER 21, 2005**

NOTES:

1. Pier W2 cap beam construction sequence, and stressing sequence shown in this drawing is for information only. Contractor is responsible for developing a detailed construction guide manual for Pier W2 cap beam that includes, but is not limited to, construction scheme, stressing sequence, and relevant construction engineering calculations. The construction guide manual shall be submitted by the Contractor to Engineer for review and approval, prior to start of construction.
2. For additional prestressing details, see "Prestressing Notes" sheet.

ALL DIMENSIONS ARE IN METERS UNLESS OTHERWISE SHOWN

R. Valizadeh/V. Toan/Y.L./W.L./F.C.
DESIGN OVERSIGHT
Roya Valizadeh / Vong Toan / Y Liu
SIGN OFF DATE 01/31/07

	BY	CHECKED	
DESIGN	J. Sun	C. Seim	
DETAILS	J. Duxbury	C. Mibelli	
QUANTITIES	J. Duxbury	C. Mibelli	

PREPARED FOR THE STATE OF CALIFORNIA DEPARTMENT OF TRANSPORTATION

R. Manzanarez
PROJECT ENGINEER

BRIDGE NO. 34-0006L/R
KILOMETER POST 13.2/13.9

SAN FRANCISCO OAKLAND BAY BRIDGE
EAST SPAN SEISMIC SAFETY PROJECT
SELF-ANCHORED SUSPENSION BRIDGE
(SUPERSTRUCTURE & TOWER)

PIER W2 CONSTRUCTION SEQUENCE

Rev. Date: 5-18-98

ORIGINAL SCALE IN MILLIMETERS FOR REDUCED PLANS 0 10 20 30 40 50 60 70 80 90 100

CU 04
EA 0120F1

DISREGARD PRINTS BEARING EARLIER REVISION DATES

REVISION DATES (PRELIMINARY STAGE ONLY): 05/15/99 08/02/99 05/30/01 04/08/02 01/08/02 12/13/02 10/13/05 12/01/05

SHEET 563R1 OF

FILE => I:\bb\04-012001\sas\contract plans and cco\cco\in progress\cco#15\akpir32.dgn

USERNAME => vignatovs DATE PLOTTED => 16 MAR 2007 TIME PLOTTED => 07:32:21

100 % PS&E