DIST.	COUNTY	ROUTE	KILOMETER POST TOTAL PROJECT	SHEET NO.	TOTAL SHEETS
04	SF	80	13.2/13.9	766R1	1204

Caltrans Metric

REGISTERED ENGINEER - CIVIL

12-6-04
PLANS APPROVAL DATE

REGISTERED PROFESSIONAL ENGINEER John Sun No. C 54648 Exp. 12/31/05 CIVIL STATE OF CALIFORNIA

The State of California or its officers or agents shall not be responsible for the accuracy or completeness of electronic copies of this plan sheet.

T.Y. LIN / MOFFATT & NICHOL
825 BATTERY STREET
SAN FRANCISCO, CA 94111

To get to the web site, go to: http://www.dot.ca.gov

REGISTERED PROFESSIONAL ENGINEER James P. Duxbury No. C 64677 Exp. 06/30/07 CIVIL STATE OF CALIFORNIA

FOR REVISIONS ONLY

MARK	DATE	DESCRIPTIONS	BY	CH'D	CCO#
4	01/31/07	WEST DEVIATION SADDLE GEOMETRY	GB	JD	15

REVISIONS

CONTRACT CHANGE ORDER NO. ____
SHEET ___ OF ___

5 **REVISED PER ADDENDUM NO. 5 DATED DECEMBER 21, 2005**

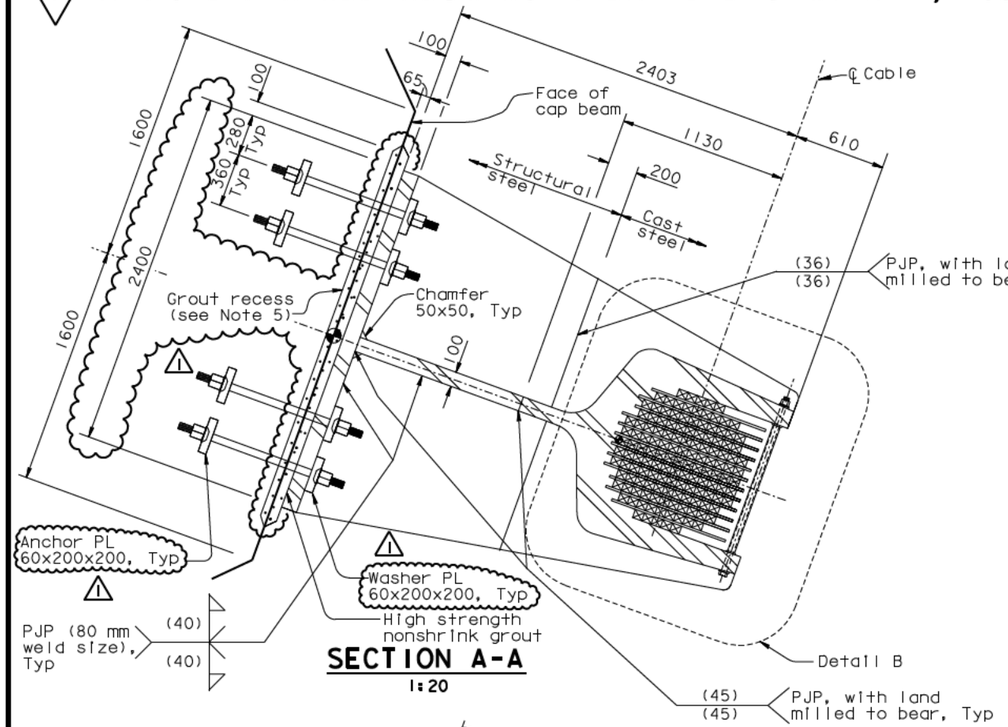

SECTION A-A
1:20

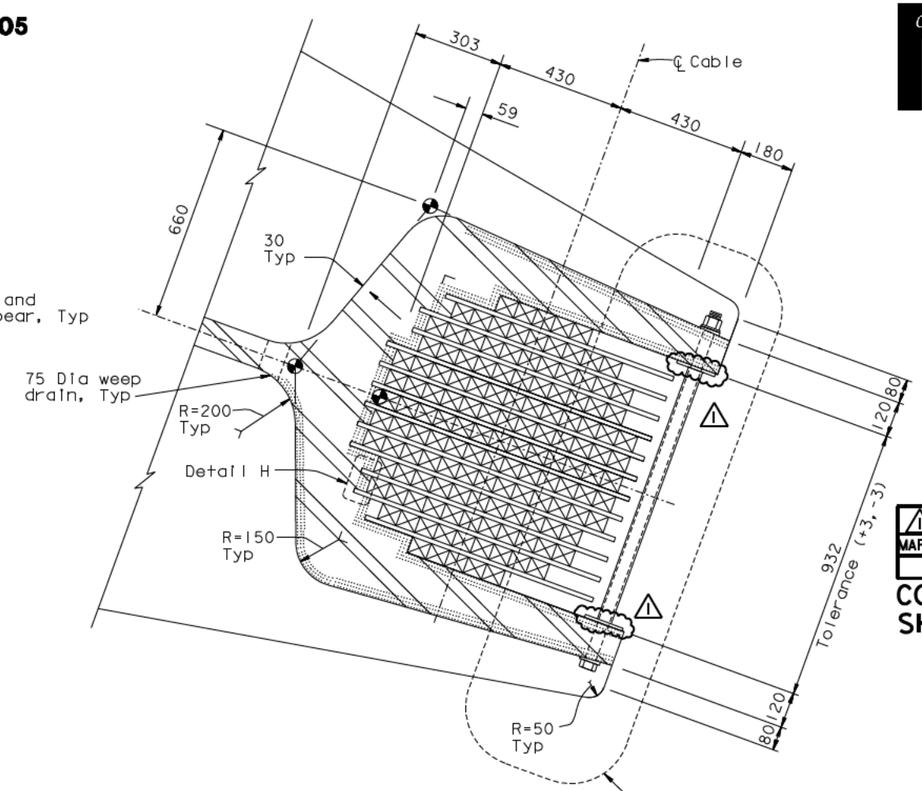

DETAIL B
1:10

4 **REVISED PER ADDENDUM NO. 4 DATED DECEMBER 9, 2005**

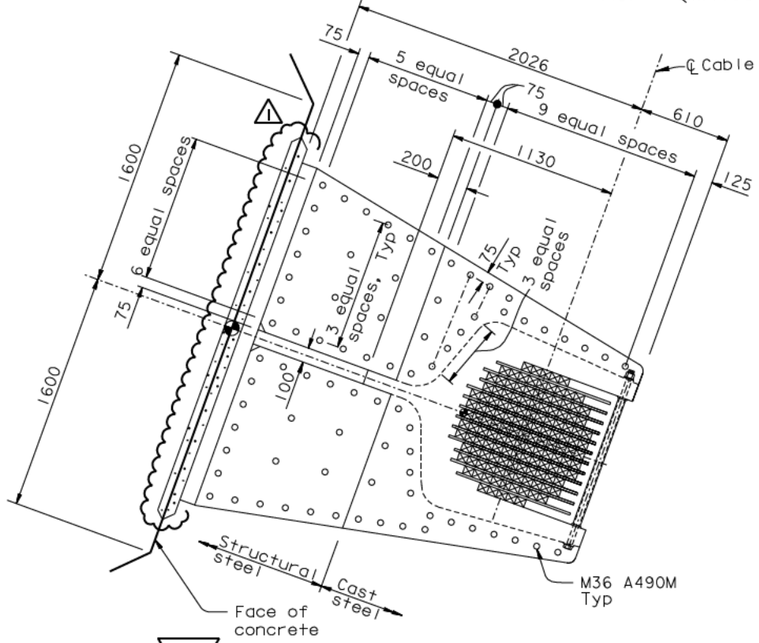

5 **SECTION B-B** (Anchor rods not shown for clarity)
1:20

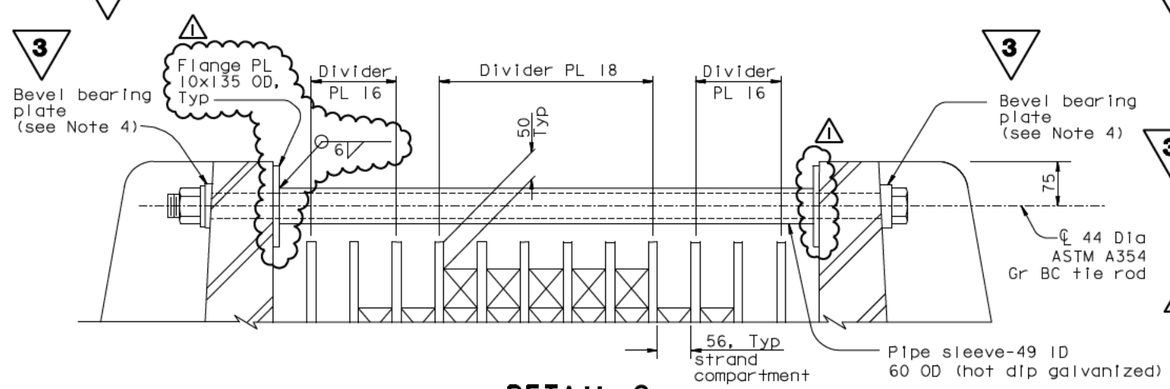

DETAIL C
1:5

LEGEND:

Indicates zone with Level I testing requirements (30 mm from final interior and exterior surface of trough for entire length of saddle)

3 **REVISED PER ADDENDUM NO. 3 DATED NOVEMBER 7, 2005**

NOTES:

1. For additional details, see "West Deviation Saddle Details No. 1" sheet.
2. For Detail H, see "West Deviation Saddle Details No. 3" sheet.
3. Built-up plates used in saddle fabrication in lieu of cast components shall match the dimensions of the cast components they replace within the specified tolerances for the casting. Any variation in thickness between the parts shall be ground off with a taper of 1:2.5.
4. In lieu of the bevel PL, the Contractor may counterbore the casting up to 12 mm to form a level bearing surface for the nut and washer.
5. West deviation saddle grout recess (depth =50 mm) shall be parallel to concrete faces of cap beam.

ALL DIMENSIONS ARE IN MILLIMETERS UNLESS OTHERWISE SHOWN

R. Valizadeh/V. Toan/Y.L./W.L./F.C.
DESIGN OVERSIGHT
Ryan Valizadeh / Vong Toan / Y. Liu
SIGN OFF DATE 01/31/07

DESIGN	BY J. Sun	CHECKED T. McMeans	
DETAILS	BY J. Duxbury	CHECKED T. McMeans	
QUANTITIES	BY J. Duxbury	CHECKED S. Shi	

PREPARED FOR THE STATE OF CALIFORNIA DEPARTMENT OF TRANSPORTATION

R. Manzanarez
PROJECT ENGINEER

BRIDGE NO. 34-0006L/R
KILOMETER POST 13.2/13.9

SAN FRANCISCO OAKLAND BAY BRIDGE
EAST SPAN SEISMIC SAFETY PROJECT
SELF-ANCHORED SUSPENSION BRIDGE
(SUPERSTRUCTURE & TOWER)

WEST DEVIATION SADDLE DETAILS NO. 2

Rev. Date: 5-18-98

ORIGINAL SCALE IN MILLIMETERS FOR REDUCED PLANS 0 10 20 30 40 50 60 70 80 90 100

CU 04
EA 0120F1

DISREGARD PRINTS BEARING EARLIER REVISION DATES

REVISION DATES (PRELIMINARY STAGE ONLY): 05/15/99 08/02/99 05/31/01 04/08/02 07/01/02 12/19/02 09/08/04 10/13/05 11/13/05 12/07/05

SHEET 349R1 OF

FILE -> I:\bb\04-012001\sas\contract plans and cco\cco\in progress\cco#15\agsdd02.dgn

100 % PS&E TIME PLOTTED => 15:34:34 DATE PLOTTED => 15 MAR 2007 USERNAME => vlgnatovsk