DIST.	COUNTY	ROUTE	KILOMETER POST TOTAL PROJECT	SHEET NO.	TOTAL SHEETS
04	SF	80	13.2/13.9	980R1	1204

Caltrans Metric

REGISTERED ENGINEER - CIVIL

12-6-04

PLANS APPROVAL DATE

REGISTERED PROFESSIONAL ENGINEER John Sun No. C 54648 Exp. 12/31/05 CIVIL STATE OF CALIFORNIA

The State of California or its officers or agents shall not be responsible for the accuracy or completeness of electronic copies of this plan sheet.

T.Y. LIN / MOFFATT & NICHOL
825 BATTERY STREET
SAN FRANCISCO, CA 94111

To get to the web site, go to: http://www.dot.ca.gov

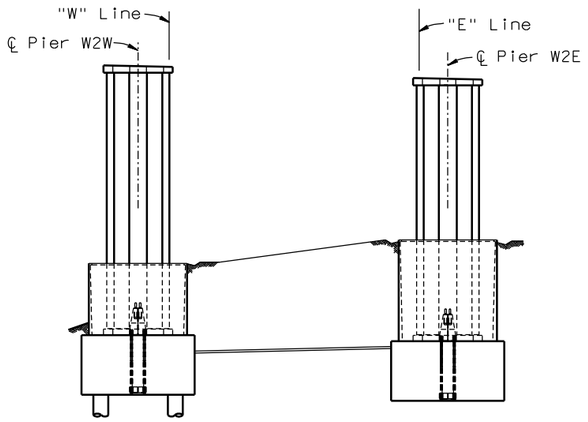

Step 1 (By Others)

1. Construct pier W2 foundation, cable tie-down anchorage, piers, retaining walls, backfill and stress footing PT rods to specified design force.

REGISTERED PROFESSIONAL ENGINEER Marwan N. Nader No. C 054426 Exp. 12/31/07 CIVIL STATE OF CALIFORNIA

FOR REVISIONS ONLY

MARK	DATE	DESCRIPTIONS	BY	CH'D	CCO#
1	01/31/07	HINGE K PIPE BEAM BLOCKOUTS	MN	NV	15

REVISIONS

CONTRACT CHANGE ORDER NO. ____
SHEET ___ OF ___

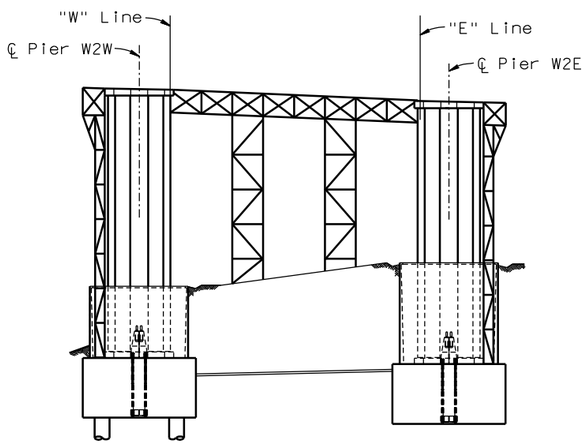

Step 2

1. Erect shoring and falsework for W2 cap beam construction.
2. Place cap beam reinforcement cages, PT ducts and other structural attachments.

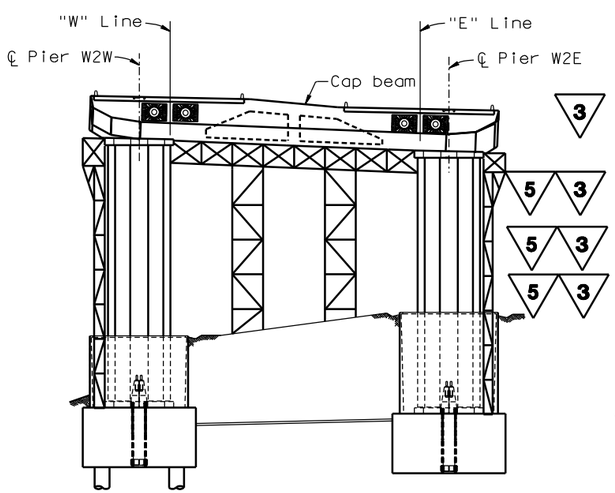

Step 3

1. Pour cap beam concrete with Hinge K pipe beams in-place.
2. Stress Cap Beam Transverse tendons CBT11-CBT36.
3. Install West Deviation Saddle.
4. Stress Hinge K Beam PT rods HB1-HB76, and VB1-VB126.
5. Remove shoring.
6. Stress vertical tendons VT1-VT16.

3 **REVISED PER ADDENDUM NO. 3 DATED NOVEMBER 7, 2005**

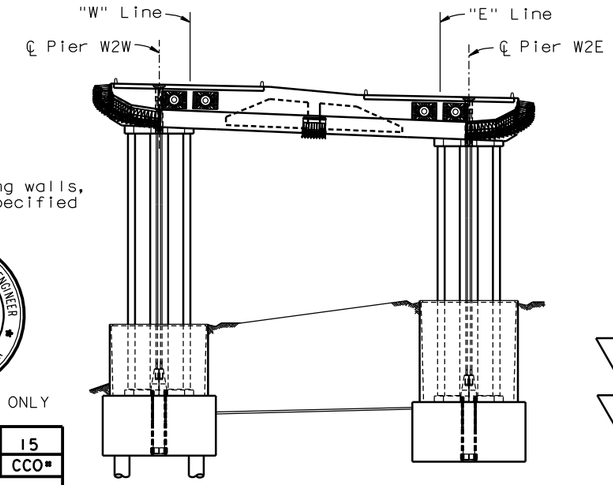

Step 4

3 1. Install tie-down stay cables and stress specified design force.

3 2. Install Jacking Saddle.

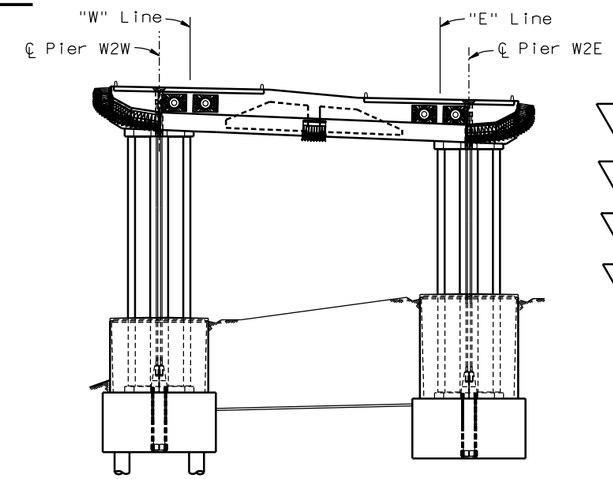

Step 5

3 1. Secure main span deck end segment and pour main span deck closure joint at cap beam.

3 2. Stress the deck cap beam continuity tendons 1A-42A, 1B-42B, 43 and 44.

3 3. Stress cap beam transverse tendons CBT2, CBT3, CBT6 and CBT7 after cable erection is complete.

3 4. Stress cap beam transverse tendons CBT9 and CBT10 after cable jacking is complete.

3 5. Stress cap beam transverse tendons CBT1, CBT4, CBT5 and CBT8 after deck erection is complete.

5 **REVISED PER ADDENDUM NO. 5 DATED DECEMBER 21, 2005**

NOTES:

1. Pier W2 cap beam construction sequence, and stressing sequence shown in this drawing is for information only. Contractor is responsible for developing a detailed construction guide manual for Pier W2 cap beam that includes, but is not limited to, construction scheme, stressing sequence, and relevant construction engineering calculations. The construction guide manual shall be submitted by the Contractor to Engineer for review and approval, prior to start of construction.
2. For additional prestressing details, see "Prestressing Notes" sheet.

ALL DIMENSIONS ARE IN METERS UNLESS OTHERWISE SHOWN

R. Valizadeh/V. Toan/Y.L./W.L./F.C.
DESIGN OVERSIGHT
Roya Valizadeh / Vong Toan / Y Liu
SIGN OFF DATE 01/31/07

	BY	CHECKED	
DESIGN	J. Sun	C. Seim	
DETAILS	J. Duxbury	C. Mibelli	
QUANTITIES	J. Duxbury	C. Mibelli	

PREPARED FOR THE STATE OF CALIFORNIA DEPARTMENT OF TRANSPORTATION

R. Manzanarez
PROJECT ENGINEER

BRIDGE NO. 34-0006L/R
KILOMETER POST 13.2/13.9

SAN FRANCISCO OAKLAND BAY BRIDGE
EAST SPAN SEISMIC SAFETY PROJECT
SELF-ANCHORED SUSPENSION BRIDGE
(SUPERSTRUCTURE & TOWER)

PIER W2 CONSTRUCTION SEQUENCE

Rev. Date: 5-18-98

ORIGINAL SCALE IN MILLIMETERS FOR REDUCED PLANS 0 10 20 30 40 50 60 70 80 90 100

CU 04
EA 0120F1

DISREGARD PRINTS BEARING EARLIER REVISION DATES

REVISION DATES (PRELIMINARY STAGE ONLY): 05/15/99 08/02/99 05/30/01 04/08/02 01/08/02 12/13/02 10/13/05 12/01/05

SHEET 563R1 OF

FILE => I:\bb\04-012001\sas\contract plans and cco\cco\in progress\cco#15\akpir32.dgn

USERNAME => vignatovs DATE PLOTTED => 16 MAR 2007 TIME PLOTTED => 07:32:21

100 % PS&E