DIST.	COUNTY	ROUTE	KILOMETER POST TOTAL PROJECT	SHEET NO.	TOTAL SHEETS
04	SF	80	13.2/13.9	913R1	1204

Caltrans Metric

REGISTERED ENGINEER - CIVIL

12-6-04
PLANS APPROVAL DATE

REGISTERED PROFESSIONAL ENGINEER Tien Hung Ho No. C 43990 Exp. 06/30/07 CIVIL STATE OF CALIFORNIA

The State of California or its officers or agents shall not be responsible for the accuracy or completeness of electronic copies of this plan sheet.

T.Y. LIN / MOFFATT & NICHOL
825 BATTERY STREET
SAN FRANCISCO, CA 94111

Caltrans now has a web site! To get to the web site, go to: http://www.dot.ca.gov

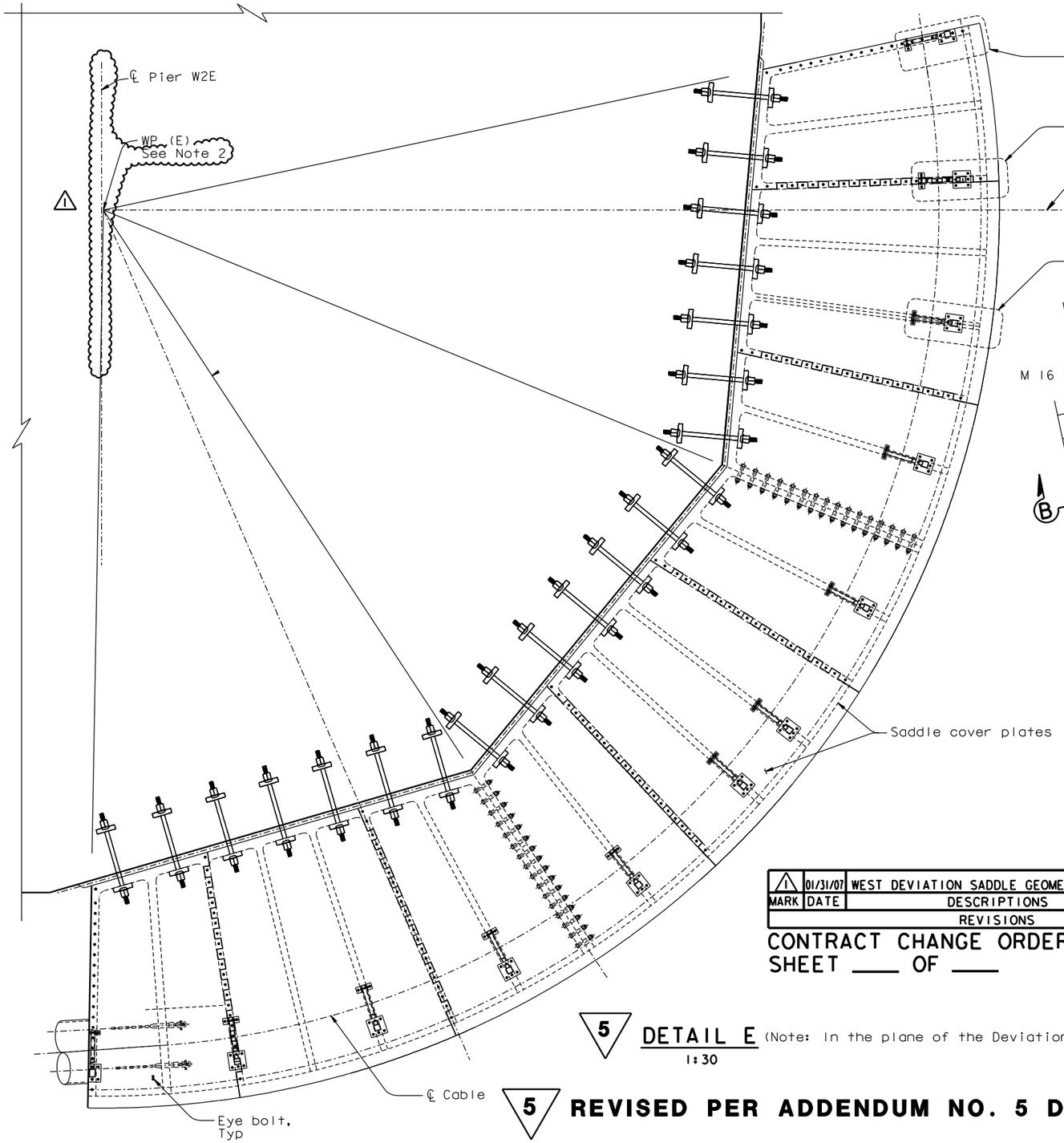

5 **DETAIL E** (Note: In the plane of the Deviation saddle)
1:30

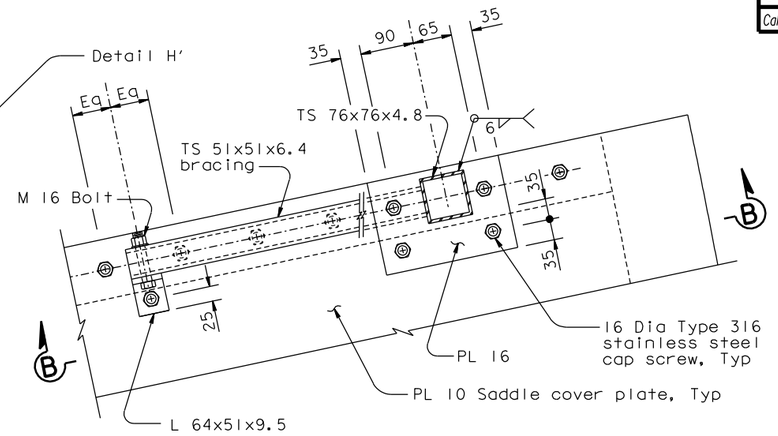

DETAIL G
1:5

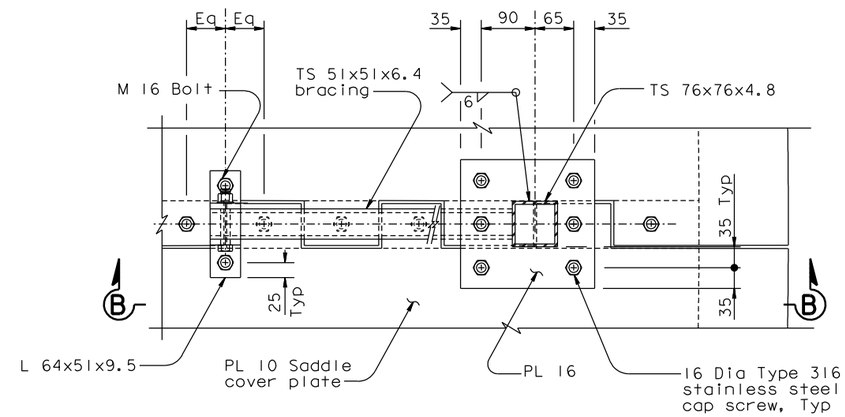

DETAIL H (Detail H' similar)
1:5

MARK	DATE	DESCRIPTIONS	BY	CH'D	CCO#
1	01/31/07	WEST DEVIATION SADDLE GEOMETRY	PC	TH	15

REVISIONS

CONTRACT CHANGE ORDER NO. _____
SHEET ____ OF ____

NOTES:

1. For Section B-B, see "West Anchorage Access Details No.5" sheet.
2. WP(E) and WP(W) do not coincide with ℄ of Pier W2, ℄ Pier W2E nor ℄ Pier W2W. 1

5 **REVISED PER ADDENDUM NO. 5 DATED DECEMBER 21, 2005**

100 % PS&E

ALL DIMENSIONS ARE IN MILLIMETERS UNLESS OTHERWISE SHOWN

R. Valizadeh/V. Toan/Y.L./W.L./F.C.
DESIGN OVERSIGHT
SIGN OFF DATE 01/31/07

	BY	CHECKED
DESIGN	T. Ho	N. Vo
DETAILS	J. Sun	N. Vo
QUANTITIES	T. Ho	N. Vo

PREPARED FOR THE STATE OF CALIFORNIA DEPARTMENT OF TRANSPORTATION

R. Manzanarez
PROJECT ENGINEER

CU 04
EA 0120F1

BRIDGE NO. 34-0006L/R
KILOMETER POST 13.2/13.9

SAN FRANCISCO OAKLAND BAY BRIDGE
EAST SPAN SEISMIC SAFETY PROJECT
SELF-ANCHORED SUSPENSION BRIDGE
(SUPERSTRUCTURE & TOWER)

WEST ANCHORAGE ACCESS DETAILS NO. 4

DISREGARD PRINTS BEARING EARLIER REVISION DATES: 05/31/01, 04/08/02, 01/01/02, 12/19/02, 09/08/04, 12/07/05

SHEET 496R1 OF

Rev. Date: 5-18-98

ORIGINAL SCALE IN MILLIMETERS FOR REDUCED PLANS 0 10 20 30 40 50 60 70 80 90 100

FILE => I:\bb\04-012001\sas\contract plans and cco\cco\in progress\cco#15\akacc02f.dgn

USERNAME => vignatovs DATE PLOTTED => 16 MAR 2007 TIME PLOTTED => 07:27:56