DIST.	COUNTY	ROUTE	KILOMETER POST TOTAL PROJECT	SHEET NO.	TOTAL SHEETS
04	SF	80	13.2/13.9	844R1	1204

5

Caltrans Metric

REGISTERED ENGINEER - CIVIL

12-6-04
PLANS APPROVAL DATE

REGISTERED PROFESSIONAL ENGINEER John Sun No. C 54648 Exp. 12/31/05 CIVIL STATE OF CALIFORNIA

The State of California or its officers or agents shall not be responsible for the accuracy or completeness of electronic copies of this plan sheet.

T.Y. LIN / MOFFATT & NICHOL
825 BATTERY STREET
SAN FRANCISCO, CA 94111

Caltrans now has a web site! To get to the web site, go to: http://www.dot.ca.gov

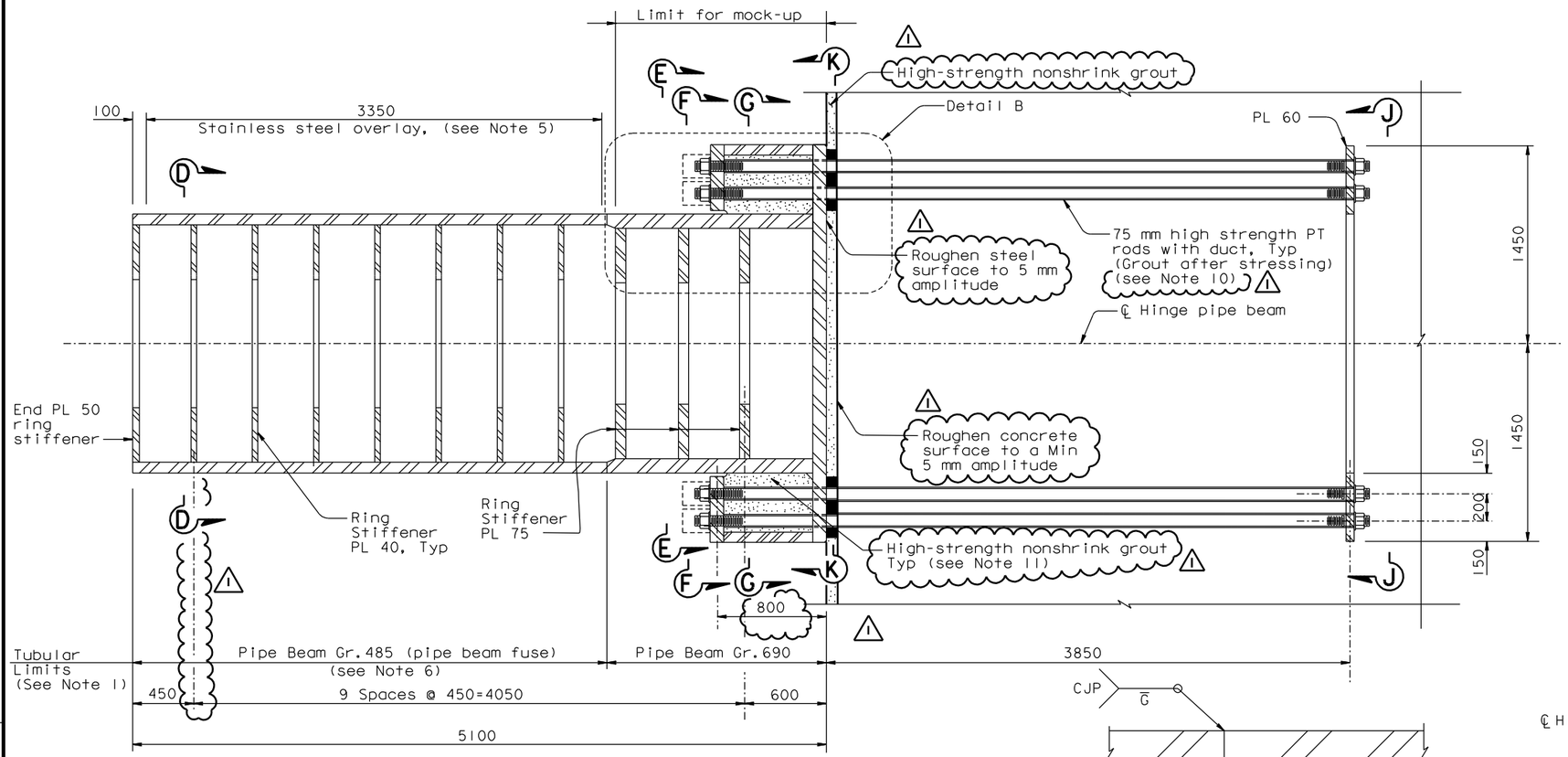

DETAIL A
1:20

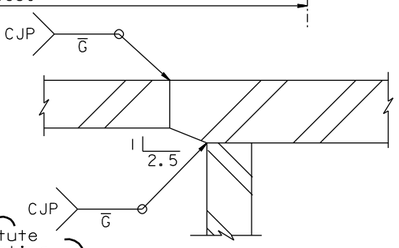

DETAIL C
1:5

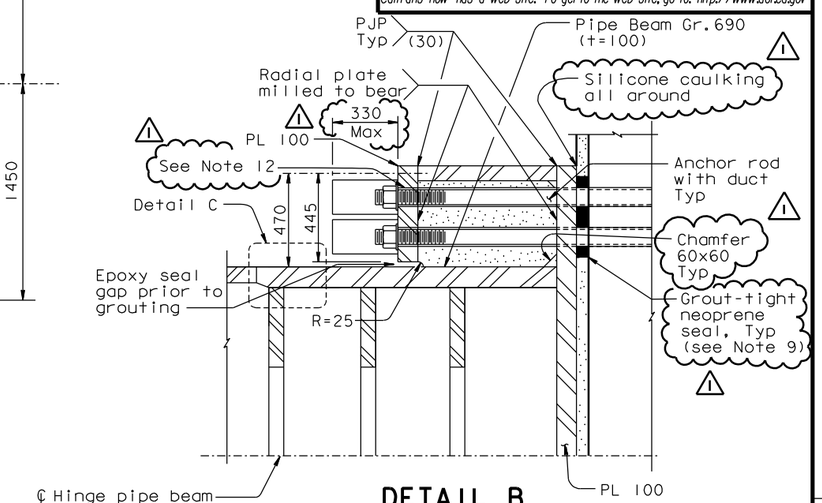

DETAIL B
1:15

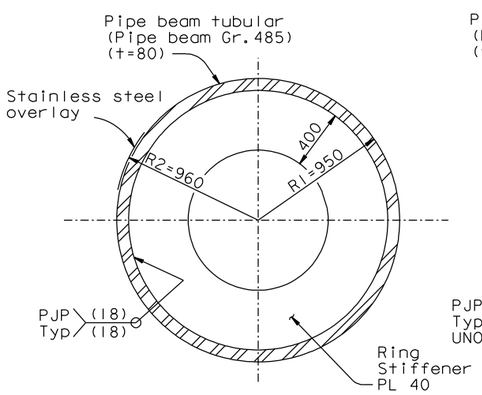

SECTION D-D
1:20

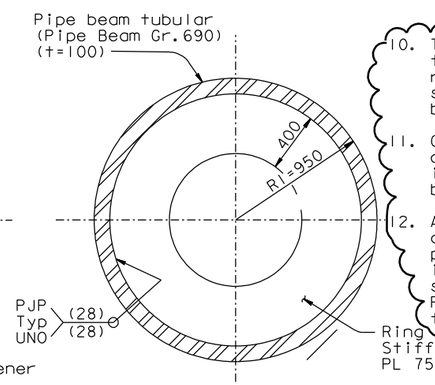

SECTION E-E
1:20

10. The Contractor may substitute the PT duct with a PT Supplier recommended debonding tape, subject to review and approval by the Engineer.

11. Contractor shall grout the interior cells of the pipe beam anchorage if PT duct substitution is approved by the Engineer.

12. At the Contractor's option, a 96 max diameter oversized hole may be used provided a 25 min thick plate washer is also used. Plate washer shall have silicone caulking around the perimeter. Post-tension cap shall be attached to the seal plate washer.

NOTES:

1. Pipe Beam tubulars shall be forgings. Hinge beam ring stiffener plate, stiffener plates and anchorage plates shall be pipe beam Gr. 485, UNO.

2. Hinge beam shall be SPCM.

3. For Section F-F through K-K, see "Hinge K Details No. 2" sheet.

4. Steel hinge beam PT anchor rods are 75 mm high strength PT rods (fu=1030 Mpa) with standard galvanized steel ducts, unless specified otherwise. For additional prestressing details, see "Prestressing Notes" sheet, and for general stressing sequence, see "Pier W2 Construction Sequence" sheet.

5. The areas noted as stainless stell overlay shall be 316L weld overlay. The area shall be machine finished to within 1 mm of the 960 theoretical radius with a surface finish of 3 μm. The minimum final thickness of the stainless steel overlay shall be 5 mm.

6. Total of 4 spare beam fuses (including stiffeners) for hinges KW and KE shall be fabricated with a minimum overall length of 3513 mm. Spare pipe beams to replace the fuse sections in case of damage due to earthquake in the future (By Others).

7. Jacking force in the steel hinge beam PT anchor rods (HB1-HB76) shall be 3000 kN typical.

8. Welds between interior ring stiffnener plates and tubulars may be undermatched by one strength level.

9. Grout-tight neoprene seal shown is schematic. The seal shall prevent any grout from seeping through the PT rod holes in the base plate. Area around the hole perimeter shall be ground smooth to produce a tight seal.

REGISTERED PROFESSIONAL ENGINEER Marwan N. Nader No. C 054426 Exp. 12/31/07 CIVIL STATE OF CALIFORNIA

FOR REVISIONS ONLY

MARK	DATE	DESCRIPTIONS	BY	CH'D	CCO#
1	01/31/07	HINGE K PIPE BEAM BLOCKOUTS	MN	NV	15

REVISIONS

CONTRACT CHANGE ORDER NO. ____
SHEET ___ OF ___

5 **REVISED PER ADDENDUM NO. 5 DATED DECEMBER 21, 2005**

ALL DIMENSIONS ARE IN MILLIMETERS UNLESS OTHERWISE SHOWN

100% PS&E

R. Valizadeh/V. Toan/Y.L./W.L./F.C.
DESIGN OVERSIGHT
Ryan Valizadeh / Vong Toan / Y. Liu
SIGN OFF DATE 01/31/07

DESIGN	BY J. Sun	CHECKED C. Redfield	
DETAILS	BY J. Duxbury	CHECKED M. Chen	
QUANTITIES	BY J. Duxbury	CHECKED S. Shi	

PREPARED FOR THE STATE OF CALIFORNIA DEPARTMENT OF TRANSPORTATION

R. Manzanarez
PROJECT ENGINEER

BRIDGE NO. 34-0006L/R
KILOMETER POST 13.2/13.9

CU 04
EA 0120F1

SAN FRANCISCO OAKLAND BAY BRIDGE EAST SPAN SEISMIC SAFETY PROJECT
SELF-ANCHORED SUSPENSION BRIDGE (SUPERSTRUCTURE & TOWER)
HINGE K DETAILS NO. 1

Rev. Date: 5-18-98

ORIGINAL SCALE IN MILLIMETERS FOR REDUCED PLANS 0 10 20 30 40 50 60 70 80 90 100

DISREGARD PRINTS BEARING EARLIER REVISION DATES

REVISION DATES (PRELIMINARY STAGE ONLY) 08/08/99 05/31/01 04/08/02 07/01/02 12/19/02 12/07/05

SHEET 427R1 OF

FILE => I:\bb\04-012001\sas\contract plans and cco\cco\in progress\cco#15\ahhng03k.dgn

USERNAME => vignatovsky DATE PLOTTED => 16 MAR 2007 TIME PLOTTED => 07:24:53