DIST.	COUNTY	ROUTE	KILOMETER POST TOTAL PROJECT	SHEET NO.	TOTAL SHEETS
04	SF	80	13.2/13.9	842R1	1204

REGISTERED ENGINEER - CIVIL

1-27-03
PLANS APPROVAL DATE

REGISTERED PROFESSIONAL ENGINEER John Sun No. C 54648 Exp. 12/31/05 CIVIL STATE OF CALIFORNIA

The State of California or its officers or agents shall not be responsible for the accuracy or completeness of electronic copies of this plan sheet.

T.Y. LIN / MOFFATT & NICHOL
825 BATTERY STREET
SAN FRANCISCO, CA 94111

To get to the web site, go to: http://www.dot.ca.gov

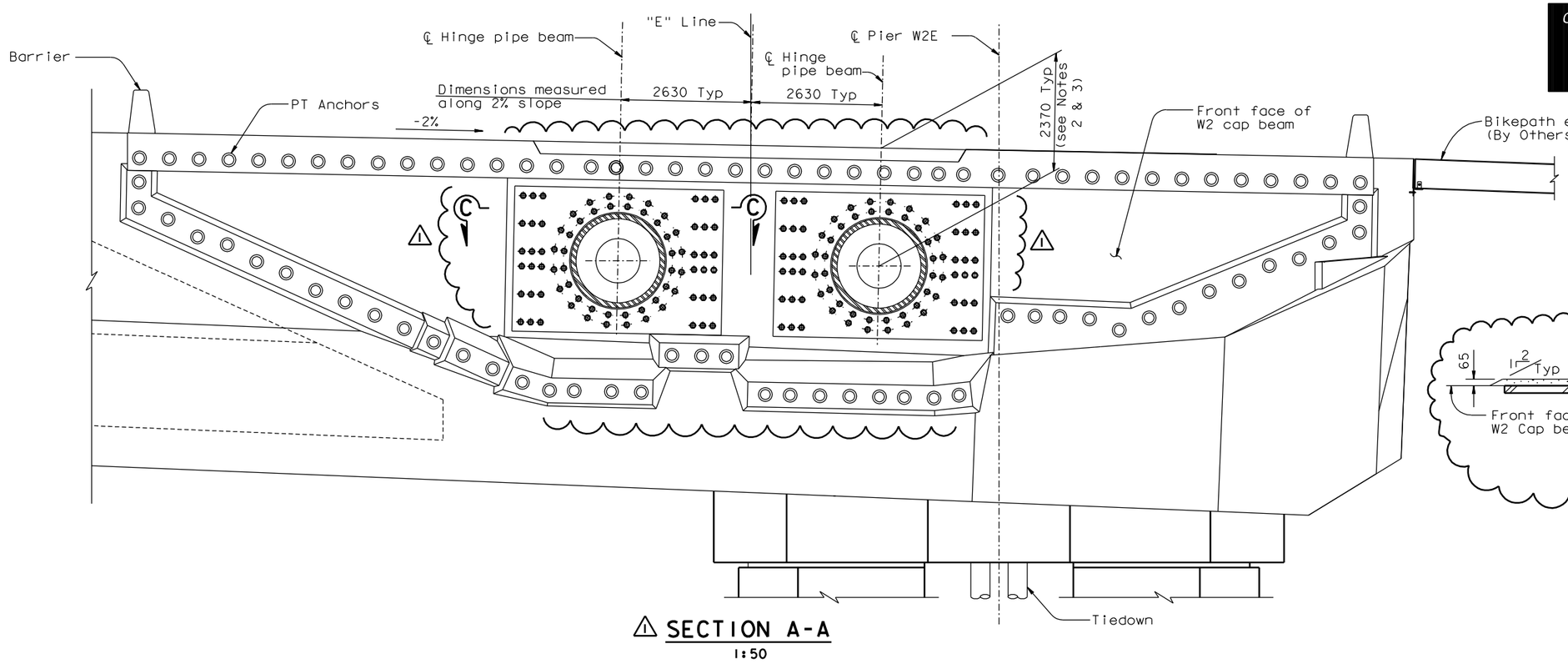

1 SECTION A-A
1:50

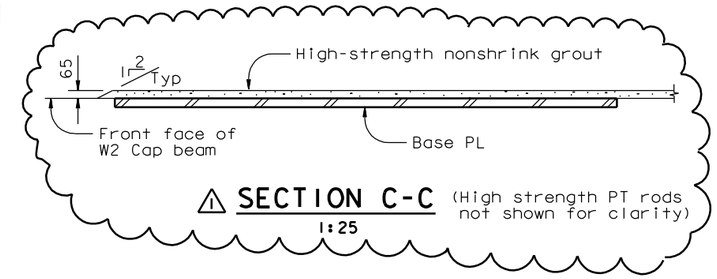

1 SECTION C-C (High strength PT rods not shown for clarity)
1:25

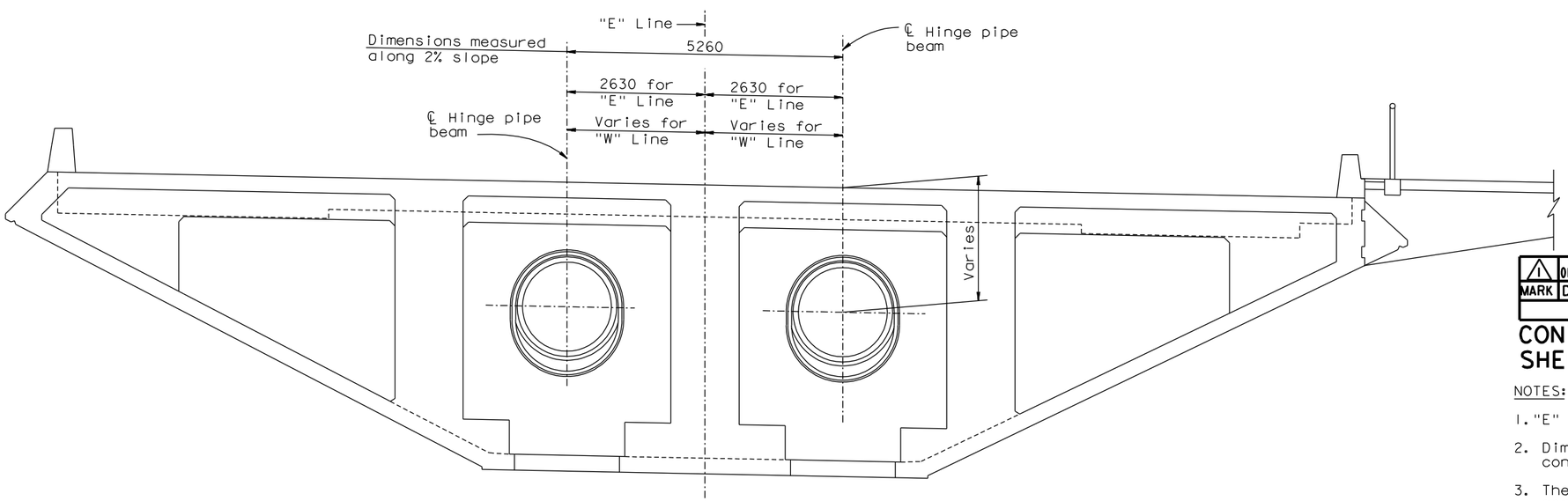

SECTION B-B
1:50

REGISTERED PROFESSIONAL ENGINEER Marwan N. Nader No. C 054426 Exp. 12/31/07 CIVIL STATE OF CALIFORNIA

FOR REVISIONS ONLY

MARK	DATE	DESCRIPTIONS	BY	CH'D	CCO#
1	01/31/07	HINGE K PIPE BEAM BLOCKOUTS	MN	NV	15

REVISIONS

CONTRACT CHANGE ORDER NO. _____
SHEET ___ OF ___

NOTES:

1. "E" Line shown, "W" Line similar.
2. Dimensions shown are with respect to finished concrete surface.
3. The centerline of the hinge pipe beams are perpendicular to the face of W2 cap beam.

ALL DIMENSIONS ARE IN MILLIMETERS UNLESS OTHERWISE SHOWN

R. Valizadeh/V. Toan/Y.L./W.L./F.C.
DESIGN OVERSIGHT
SIGN OFF DATE 01/31/07

DESIGN	BY J. Sun	CHECKED M. Nader	
DETAILS	BY J. Duxbury	CHECKED C. Mibelli	
QUANTITIES	BY J. Duxbury	CHECKED C. Mibelli	

PREPARED FOR THE STATE OF CALIFORNIA DEPARTMENT OF TRANSPORTATION

R. Manzanarez
PROJECT ENGINEER

BRIDGE NO. 34-0006L/R
KILOMETER POST 13.2/13.9

SAN FRANCISCO OAKLAND BAY BRIDGE
EAST SPAN SEISMIC SAFETY PROJECT
SELF-ANCHORED SUSPENSION BRIDGE
(SUPERSTRUCTURE & TOWER)

HINGE K LAYOUT NO. 2

Rev. Date: 5-18-98

ORIGINAL SCALE IN MILLIMETERS FOR REDUCED PLANS 0 10 20 30 40 50 60 70 80 90 100

CU 04
EA 0120F1

DISREGARD PRINTS BEARING EARLIER REVISION DATES

REVISION DATES (PRELIMINARY STAGE ONLY) 04/08/02 07/09/02 12/19/02

SHEET 425R1 OF

FILE => I:\bb\04-012001\sas\contract plans and cco\cco\in progress\cco#15\ahhk102.dgn

100% PS&E

USERNAME => vignatovsk DATE PLOTTED => 15 MAR 2007 TIME PLOTTED => 15:41:59