DIST	COUNTY	ROUTE	KILOMETER POST TOTAL PROJECT	SHEET No	TOTAL SHEETS
04	SF	80	13.2/13.9	98R1	1204

Caltrans Metric

Jens Erlingsson 12/19/02
REGISTERED ELECTRICAL ENGINEER DATE

REGISTERED PROFESSIONAL ENGINEER
JENS ERLINGSSON
No. 8249
Exp. 9/30/06
ELECTRICAL
STATE OF CALIFORNIA

PLANS APPROVAL DATE

PB POWER, Inc.
A Parsons Brinckerhoff Company
303 Second St., Suite 700N
San Francisco, CA 94107-1317

The State of California or its officers or agents shall not be responsible for the accuracy or completeness of electronic copies of this plan sheet.

Caltrans now has a web site! To get to the web site, go to http://www.dot.ca.gov

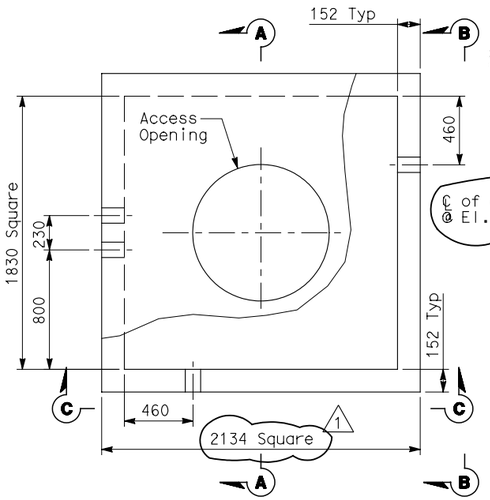

PLAN-MANHOLE-26
SCALE: 1:20 (12.47 kV)

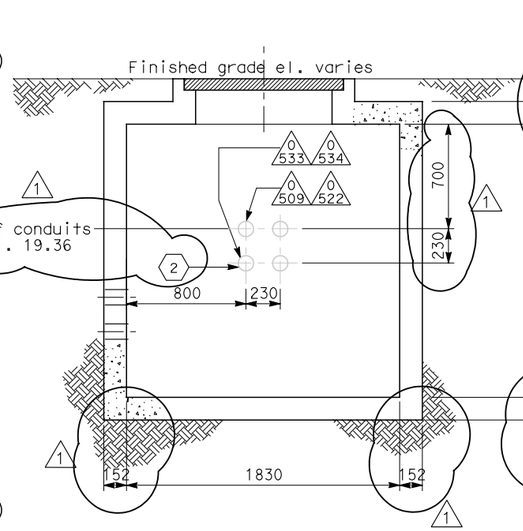

SECTION A-A
SCALE: 1:20

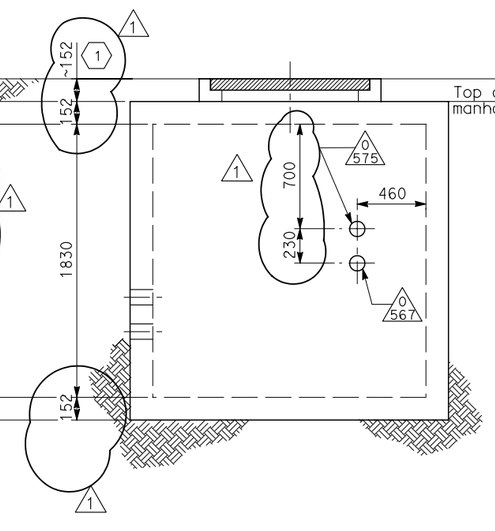

SECTION B-B
SCALE: 1:20

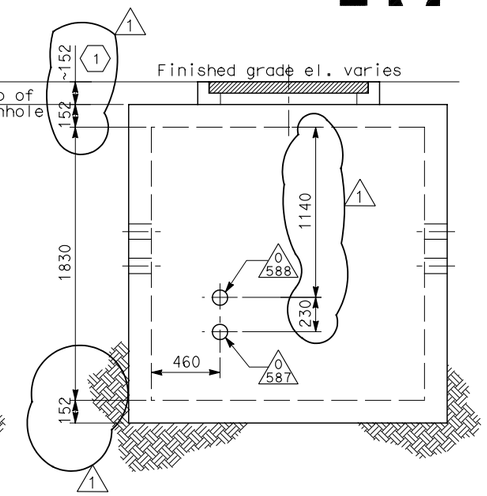

SECTION C-C
SCALE: 1:20

NOTES:

1. References:
   - For duct banks and manhole plan, see sheet E-11.
   - For typical manhole and duct bank details, see sheet E-17.
   - For duct bank sections, see sheets E-19 and E-23.
   - For circuit and conduit/cable tray schedules, see sheets starting at E-401
2. For other related work, not shown on this sheet, see Electrical Special Provisions.

SHEET NOTES:

1. Approximate distance of manhole necking or riser is from the finished grade and top of manhole. Maximum length of manhole necking or riser shall be 914 mm.
2. Not in contract. (Work included on contract 04-120P4).

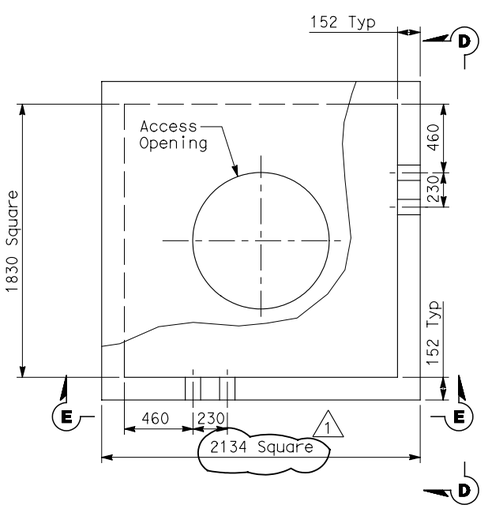

PLAN-MANHOLE-28
SCALE: 1:20 (Non-Caltrans Utilities)

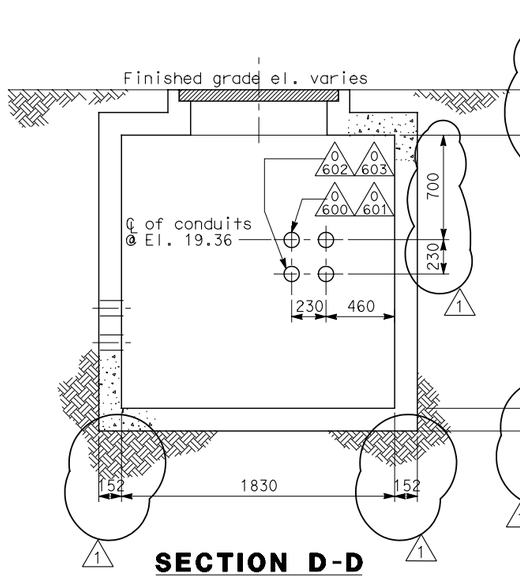

SECTION D-D
SCALE: 1:20

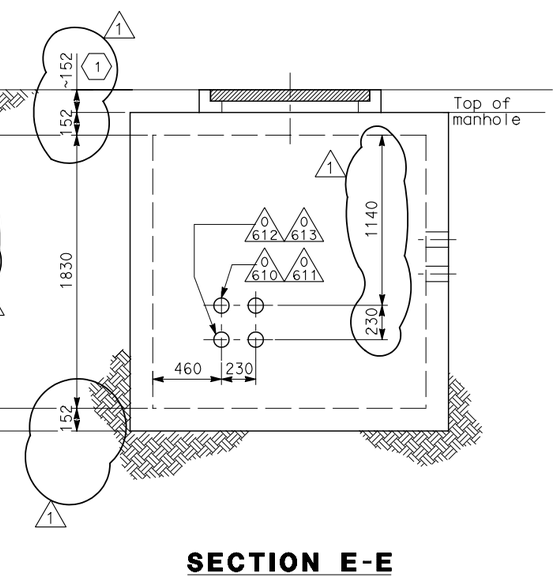

SECTION E-E
SCALE: 1:20

MARK	DATE	DESCRIPTIONS	REV	CK	CCO NO.
1	1/10/06	Revised Manhole detail	CR	JE	11

REVISIONS

CONTRACT CHANGE ORDER NO. 11
SHEET 8 OF 13

DETAILS
UNDERGROUND
MANHOLE PLAN AND SECTIONS
SCALE AS NOTED

E-15

STATE OF CALIFORNIA - DEPARTMENT OF TRANSPORTATION
Caltrans

DESIGN OVERSIGHT: BEHZAD GOLEMOHAMMADI
CALCULATED/DESIGNED BY: AB
CHECKED BY: CYF
DATE: 11/04
REVISED BY: 11/01
DATE REVISED:

LAST REVISION 00-00-00
DATE PLOTTED => $DATE
TIME PLOTTED => $TIME

FOR REDUCED PLANS ORIGINAL SCALE IS IN MILLIMETERS 0 20 40 60 80
DGN FILE =>$REQUEST
USERNAME =>$USER
CU 04251
EA 0120F1